No. PF-2U0C

TCM®

PARTS CATALOGUE

FORKLIFT TRUCK

Diesel Powered

FD20C3Z
FD20T3Z
FD25C3Z
FD25T3Z

TCM CORPORATION

ご使用のまえに

このパーツカタログは，TCM フォークリフトの構成部品を収録しています。

部品ご注文について

部品ご注文の際は，必ず車両の形式・仕様・製造番号（号車），部品番号および注文数を明示してください。車両の製造番号（号車）は車両銘板に表示しています。

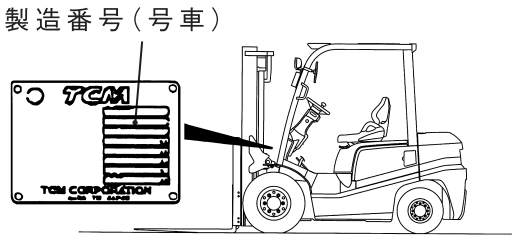

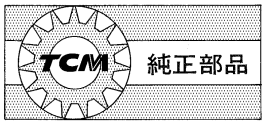

部品は，必ず「TCM 純正部品」をご使用ください。
純正部品以外の部品をご使用になり，故障が発生した場合は保証できません。

ご使用について

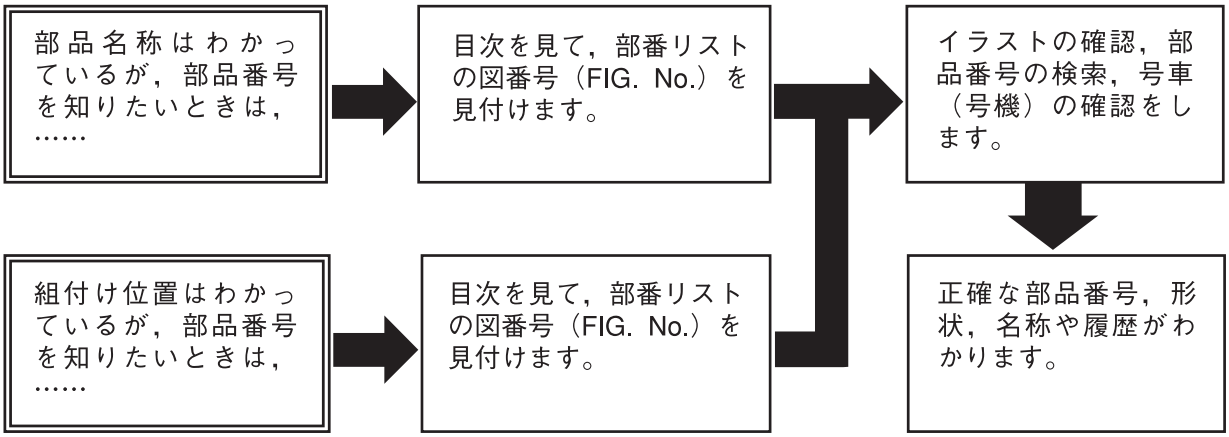

略語および記号

ＡＳＳＹ	組立品を示します。
ＲＨ	車両の前方向に向かって右側を示します。
ＬＨ	車両の前方向に向かって左側を示します。
ＡＲ	必要に応じた数を使用します。
＊	セットおよびキットの販売部品を示します。
Ｔ	厚みを示します。
＋	図示していません。
＃	単体販売しません。

部品は，品質向上のため予告なく変更することがありますので，あらかじめご了承ください。
詳細は，TCM 指定整備工場にご相談ください。

INTRODUCTION

This Parts Catalogue contains the component parts of the TCM FORKLIFT TRUCK.

How to order parts

When ordering, be sure to specify the model name, specification and serial number (machine number) of your machine, as well as the part number and desired quantity for each part. The machine serial number (machine number) is indicated on the machine name plate.

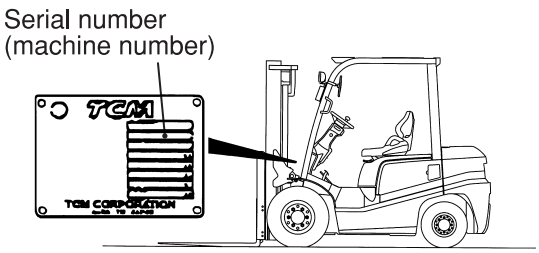

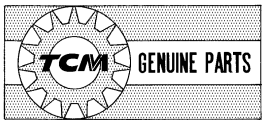

Always use "TCM's Genuine Parts". We cannot guarantee any loss or trouble attributable to other parts than ours.

How to use the Parts Catalogue

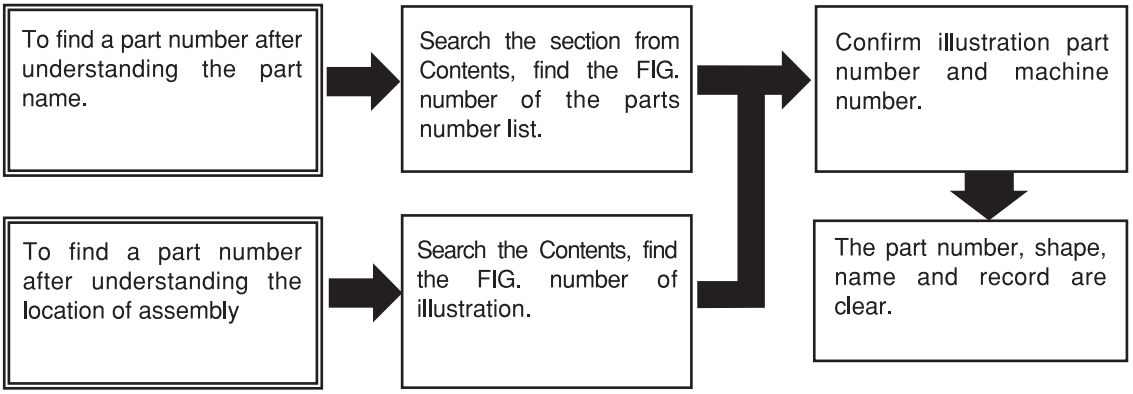

Abbreviations and symbols

ASSY ···	Assembled unit.
RH ·····	Right-hand when viewed forward on the truck.
LH ·····	Left-hand when viewed forward on the truck.
AR ·····	Quantity required.
* ·····	The marketable part set or kit.
T ·····	Thickness.
+ ·····	Not illustrated.
# ·····	Not sold separately.

Materals and specifications subject to change without notice.

CONTENTS　目次

a	FD20C3Z	c	FD25C3Z
b	FD20T3Z	d	FD25T3Z

CHASSIS ｼｬｰｼ

SECTION　部門	a	b	c	d	G.NO.
ENGINE MOUNT ｴﾝｼﾞﾝﾏｳﾝﾄ	○	○	○	○	1
AIR CLEANER ｴｱｰｸﾘｰﾅ	○	○	○	○	2
AIR DUCT ｴｱｰﾀﾞｸﾄ	○	○	○	○	3
AIR DUCT [CAKB] ｴｱｰﾀﾞｸﾄ	○	○	○	○	4
COOLING UNIT (CLUTCH) ｸｰﾘﾝｸﾞﾕﾆｯﾄ	○		○		5
COOLING UNIT (TOR-CON) ｸｰﾘﾝｸﾞﾕﾆｯﾄ		○		○	6
FAN SHROUD ﾌｧﾝｼｭﾗｳﾄﾞ	○	○	○	○	7
RADIATOR PARTS & RESERVE TANK ﾗｼﾞｴｰﾀﾊﾟｰﾂ&ﾘｻﾞｰﾌﾞﾀﾝｸ	○	○	○	○	8
RADIATOR HOSE ﾗｼﾞｴｰﾀﾎｰｽ	○	○	○	○	9
FUEL SYSTEM ﾌｭｰｴﾙｼｽﾃﾑ	○	○	○	○	10
EXHAUST SYSTEM ｴｷｿﾞｰｽﾄｼｽﾃﾑ	○	○	○	○	11
EXHAUST SYSTEM [TUE] ｴｷｿﾞｰｽﾄｼｽﾃﾑ	○	○	○	○	12
FRONT TUBE & JOINT ﾌﾛﾝﾄﾁｭｰﾌﾞ&ｼﾞｮｲﾝﾄ	○	○	○	○	13
COMBINATION METER ｺﾝﾋﾞﾈｰｼｮﾝﾒｰﾀ	○	○	○	○	14
FRONT GUARD WIRE HARNESS (CLUTCH) ﾌﾛﾝﾄｶﾞｰﾄﾞﾜｲﾔﾊｰﾈｽ	○		○		15
FRONT GUARD WIRE HARNESS (TOR-CON) ﾌﾛﾝﾄｶﾞｰﾄﾞﾜｲﾔﾊｰﾈｽ		○		○	16
COMBINATION SWITCH (CLUTCH) ｺﾝﾋﾞﾈｰｼｮﾝｽｲｯﾁ	○		○		17
COMBINATION SWITCH (TOR-CON) ｺﾝﾋﾞﾈｰｼｮﾝｽｲｯﾁ		○		○	18
ELECTRIC PARTS (CLUTCH) ｴﾚｸﾄﾘｯｸﾊﾟｰﾂ	○		○		19
ELECTRIC PARTS (TOR-CON) ｴﾚｸﾄﾘｯｸﾊﾟｰﾂ		○		○	20
ENGINE WIRE HARNESS (CLUTCH) ｴﾝｼﾞﾝﾜｲﾔﾊｰﾈｽ	○		○		21

CONTENTS　目次

a	FD20C3Z	c	FD25C3Z
b	FD20T3Z	d	FD25T3Z

CHASSIS ｼｬｰｼ

SECTION　部門	a	b	c	d	G.NO.
ENGINE WIRE HARNESS (TOR-CON) ｴﾝｼﾞﾝﾜｲﾔﾊｰﾈｽ		○		○	22
BATTERY ﾊﾞｯﾃﾘ	○	○	○	○	23
HEAD LAMP & FRONT COMBINATION LAMP ﾍｯﾄﾞﾗﾝﾌﾟ&ﾌﾛﾝﾄｺﾝﾋﾞﾈｰｼｮﾝﾗﾝﾌﾟ	○	○	○	○	24
REAR COMBINATION LAMP ﾘﾔｰｺﾝﾋﾞﾈｰｼｮﾝﾗﾝﾌﾟ	○	○	○	○	25
LICENSE LAMP [LP] ﾗｲｾﾝｽﾗﾝﾌﾟ	○	○	○	○	26
REAR WORKING LIGHT [RWLR] ﾘﾔｰﾜｰｷﾝｸﾞﾗｲﾄ	○	○	○	○	27
REAR WORKING LIGHT [RWLL] ﾘﾔｰﾜｰｷﾝｸﾞﾗｲﾄ	○	○	○	○	28
REAR WORKING LIGHT [RWL2] ﾘﾔｰﾜｰｷﾝｸﾞﾗｲﾄ	○	○	○	○	29
REAR WORKING LIGHT [RWL/FE][RWL/TUE] ﾘﾔｰﾜｰｷﾝｸﾞﾗｲﾄ	○	○	○	○	30
REAR WORKING LIGHT WIRE HARNESS [RWL] ﾘﾔｰﾜｰｷﾝｸﾞﾗｲﾄﾜｲﾔﾊｰﾈｽ	○	○	○	○	31
REAR WORKING LIGHT WIRE HARNESS [RWL/BBR] ﾘﾔｰﾜｰｷﾝｸﾞﾗｲﾄﾜｲﾔﾊｰﾈｽ	○	○	○	○	32
REVOLVING LIGHT [RLY][RLR] ﾘﾎﾞﾙﾋﾞﾝｸﾞﾗｲﾄ	○	○	○	○	33
REVOLVING LIGHT WIRE HARNESS [RLY][RLR] ﾘﾎﾞﾙﾋﾞﾝｸﾞﾗｲﾄﾜｲﾔﾊｰﾈｽ	○	○	○	○	34
SPOT LIGHT [SPL] ｽﾎﾟｯﾄﾗｲﾄ	○	○	○	○	35
BACK BUZZER ﾊﾞｯｸﾌﾞｻﾞｰ	○	○	○	○	36
HEATER UNIT [HR] ﾋｰﾀﾕﾆｯﾄ	○	○	○	○	37
HEATER VALVE & ELBOW [HR] ﾋｰﾀﾊﾞﾙﾌﾞ&ｴﾙﾎﾞ	○	○	○	○	38
LIFT LOCK VALVE WIRE HARNESS [VLL] ﾘﾌﾄﾛｯｸﾊﾞﾙﾌﾞﾜｲﾔﾊｰﾈｽ	○	○	○	○	39
FAN [FAN] ﾌｧﾝ	○	○	○	○	40
AMMETER [AM] ｱﾝﾒｰﾀ	○	○	○	○	41
SPEED METER [SM] ｽﾋﾟｰﾄﾞﾒｰﾀ	○	○	○	○	42

CONTENTS　目次

a	FD20C3Z	c	FD25C3Z
b	FD20T3Z	d	FD25T3Z

CHASSIS ｼｬｰｼ

SECTION　部門	a	b	c	d	G.NO.
TORQUE CONVERTER THERMOMETER [TTM] ﾄﾙｸｺﾝﾊﾞｰﾀｻｰﾓﾒｰﾀ		○		○	43
TORQUE CONVERTER PRESSURE METER [TPM] ﾄﾙｸｺﾝﾊﾞｰﾀﾌﾟﾚｯｼｬﾒｰﾀ		○		○	44
SPEED DETECTOR UNIT [SAS] ｽﾋﾟｰﾄﾞﾃﾞｨﾃｸﾀﾕﾆｯﾄ	○	○	○	○	45
SPEED ALARM SYSTEM [SASB] ｽﾋﾟｰﾄﾞｱﾗｰﾑｼｽﾃﾑ	○	○	○	○	46
SPEED ALARM SYSTEM [SASR] ｽﾋﾟｰﾄﾞｱﾗｰﾑｼｽﾃﾑ	○	○	○	○	47
SPEED ALARM SYSTEM [SASC] ｽﾋﾟｰﾄﾞｱﾗｰﾑｼｽﾃﾑ	○	○	○	○	48
OK MONITOR [OKM] OKﾓﾆﾀ	○	○	○	○	49
INTERLOCK (CLUTCH):[SIL] ｲﾝﾀｰﾛｯｸ	○		○		50
INTERLOCK (TOR-CON):[SIL] ｲﾝﾀｰﾛｯｸ		○		○	51
INTERLOCK (TOR-CON):[SIL] ｲﾝﾀｰﾛｯｸ		○		○	51A
DRIVE UNIT MOUNT (CLUTCH) ﾄﾞﾗｲﾌﾞﾕﾆｯﾄﾏｳﾝﾄ	○		○		52
DRIVE UNIT MOUNT (TOR-CON) ﾄﾞﾗｲﾌﾞﾕﾆｯﾄﾏｳﾝﾄ		○		○	53
CHANGE LEVER (CLUTCH) ﾁｪﾝｼﾞﾚﾊﾞｰ	○		○		54
CLUTCH (CLUTCH) ｸﾗｯﾁ	○		○		55
MISSION CASE (CLUTCH) ﾐｯｼｮﾝｹｰｽ	○		○		56
MISSION GEAR (CLUTCH) ﾐｯｼｮﾝｷﾞﾔｰ	○		○		57
TORQUE CONVERTER CASE (TOR-CON) ﾄﾙｸｺﾝﾊﾞｰﾀｹｰｽ		○		○	58
CHARGING PUMP (TOR-CON) ﾁｬｰｼﾞﾝｸﾞﾎﾟﾝﾌﾟ		○		○	59
MISSION CASE (TOR-CON) ﾐｯｼｮﾝｹｰｽ		○		○	60
CLUTCH PACK (TOR-CON) ｸﾗｯﾁﾊﾟｯｸ		○		○	61
CONTROL VALVE (TOR-CON) ｺﾝﾄﾛｰﾙﾊﾞﾙﾌﾞ		○		○	62

CONTENTS　目次

a	FD20C3Z	c	FD25C3Z
b	FD20T3Z	d	FD25T3Z

CHASSIS ｼｬｰｼ

SECTION　部門	a	b	c	d	FIG.NO.
DRIVE AXLE ﾄﾞﾗｲﾌﾞｱｸｽﾙ	○	○	○	○	63
DRUM HUB ﾄﾞﾗﾑﾊﾌﾞ	○	○	○	○	64
PROPELLER SHAFT ﾌﾟﾛﾍﾟﾗｼｬﾌﾄ	○	○	○	○	65
REDUCTION & DIFFERENTIAL ﾘﾀﾞｸｼｮﾝ&ﾃﾞﾌｧﾚﾝｼｬﾙ	○	○	○	○	66
REDUCTION ﾘﾀﾞｸｼｮﾝ	○	○	○	○	67
DIFFERENTIAL ﾃﾞﾌｧﾚﾝｼｬﾙ	○	○	○	○	68
WHEEL BRAKE ﾎｲｰﾙﾌﾞﾚｰｷ	○	○	○	○	69
STEERING WHEEL UNIT ｽﾃｱﾘﾝｸﾞﾎｲｰﾙﾕﾆｯﾄ	○	○	○	○	70
STEERING WHEEL ｽﾃｱﾘﾝｸﾞﾎｲｰﾙ	○	○	○	○	71
ORBITROL ｵｰﾋﾞｯﾄﾛｰﾙ	○	○	○	○	72
ORBITROL FITTING ｵｰﾋﾞｯﾄﾛｰﾙﾌｨｯﾃｨﾝｸﾞ	○	○	○	○	73
STEERING AXLE ｽﾃｱﾘﾝｸﾞｱｸｽﾙ	○	○	○	○	74
STEERING AXLE ｽﾃｱﾘﾝｸﾞｱｸｽﾙ	○	○	○	○	74A
AXLE SUPPORT ｱｸｽﾙｻﾎﾟｰﾄ	○	○	○	○	75
HUB NUT ﾊﾌﾞﾅｯﾄ	○	○	○	○	76
FENDER [DD][SDD][TUJSF] ﾌｪﾝﾀﾞ	○	○	○	○	77
FRONT WHEEL ﾌﾛﾝﾄﾎｲｰﾙ	○	○	○	○	78
FRONT WHEEL [DR F] ﾌﾛﾝﾄﾎｲｰﾙ	○	○	○	○	79
FRONT WHEEL [TJ F][TJSF][TF][TS F] ﾌﾛﾝﾄﾎｲｰﾙ	○	○	○	○	80
FRONT WHEEL [(TJ F,TJSF,TF,TS F)/DR F] ﾌﾛﾝﾄﾎｲｰﾙ	○	○	○	○	81
FRONT WHEEL [TSUF][TUJF][TUSF][TUWF][TUGF] ﾌﾛﾝﾄﾎｲｰﾙ	○	○	○	○	82

CONTENTS　目次

a	FD20C3Z	c	FD25C3Z
b	FD20T3Z	d	FD25T3Z

CHASSIS ｼｬｰｼ

SECTION　部門	a	b	c	d	FIG.NO.
FRONT WHEEL [TUJF/DR F] ﾌﾛﾝﾄﾎｲｰﾙ	○	○	○	○	83
FRONT WHEEL [TRAF] ﾌﾛﾝﾄﾎｲｰﾙ	○	○	○	○	84
FRONT WHEEL [TUJSF] ﾌﾛﾝﾄﾎｲｰﾙ	○	○	○	○	85
FRONT WHEEL [TJ W][TJSW][TW][TS W] ﾌﾛﾝﾄﾎｲｰﾙ	○	○	○	○	86
FRONT WHEEL [TUJW][TUSW][TUWW][TUGW] ﾌﾛﾝﾄﾎｲｰﾙ	○	○	○	○	87
FRONT WHEEL [TJ W70][TJSW70][TW70][TS W70] ﾌﾛﾝﾄﾎｲｰﾙ	○	○	○	○	88
FRONT WHEEL [TUJW70][TUSW70][TUWW70][TUGW70] ﾌﾛﾝﾄﾎｲｰﾙ	○	○	○	○	89
REAR WHEEL ﾘﾔｰﾎｲｰﾙ	○	○	○	○	90
REAR WHEEL [DR R] ﾘﾔｰﾎｲｰﾙ	○	○	○	○	91
REAR WHEEL [TJ R][TJSR][TR][TS R] ﾘﾔｰﾎｲｰﾙ	○	○	○	○	92
REAR WHEEL [(TJ R,TJSR,TR,TS R)/DR R] ﾘﾔｰﾎｲｰﾙ	○	○	○	○	93
REAR WHEEL [TSUR][TUJR][TUSR][TUWR][TUGR] ﾘﾔｰﾎｲｰﾙ	○	○	○	○	94
REAR WHEEL [TUJR/DR R] ﾘﾔｰﾎｲｰﾙ	○	○	○	○	95
REAR WHEEL [TRAR] ﾘﾔｰﾎｲｰﾙ	○	○	○	○	96
POWER CYLINDER ﾊﾟﾜｰｼﾘﾝﾀﾞ	○	○	○	○	97
POWER CYLINDER ﾊﾟﾜｰｼﾘﾝﾀﾞ	○	○	○	○	97A
POWER CYLINDER BOOT [PSB] ﾊﾟﾜｰｼﾘﾝﾀﾞﾌﾞｰﾂ	○	○	○	○	98
OVERHEAD GUARD ｵｰﾊﾞﾍｯﾄﾞｶﾞｰﾄﾞ	○	○	○	○	99
OVERHEAD GUARD ｵｰﾊﾞﾍｯﾄﾞｶﾞｰﾄﾞ	○	○	○	○	99A
OVERHEAD GUARD [HGD] ｵｰﾊﾞﾍｯﾄﾞｶﾞｰﾄﾞ	○	○	○	○	100
OVERHEAD GUARD [HGD] ｵｰﾊﾞﾍｯﾄﾞｶﾞｰﾄﾞ	○	○	○	○	100A

CONTENTS　目次

a	FD20C3Z	c	FD25C3Z
b	FD20T3Z	d	FD25T3Z

CHASSIS ｼｬｰｼ

SECTION　部門	a	b	c	d	FIG.NO.
FRONT LAMP BRACKET ﾌﾛﾝﾄﾗﾝﾌﾟﾌﾞﾗｹｯﾄ	○	○	○	○	101
FRONT LAMP BRACKET [HL][BKH] ﾌﾛﾝﾄﾗﾝﾌﾟﾌﾞﾗｹｯﾄ	○	○	○	○	102
REAR LAMP COVER ﾘﾔｰﾗﾝﾌﾟｶﾊﾞｰ	○	○	○	○	103
HEAD GUARD PARTS ﾍｯﾄﾞｶﾞｰﾄﾞﾊﾟｰﾂ	○	○	○	○	104
POP RIVET ﾎﾟｯﾌﾟﾘﾍﾞｯﾄ	○	○	○	○	105
POP RIVET [TUE][BBA][BBV][AW061][RWL][FE] ﾎﾟｯﾌﾟﾘﾍﾞｯﾄ	○	○	○	○	106
ACCEL PEDAL ｱｸｾﾙﾍﾟﾀﾞﾙ	○	○	○	○	107
FOOT PEDAL (CLUTCH) ﾌｯﾄﾍﾟﾀﾞﾙ	○		○		108
FOOT PEDAL (TOR-CON) ﾌｯﾄﾍﾟﾀﾞﾙ		○		○	109
FOOT PEDAL CYLINDER (CLUTCH) ﾌｯﾄﾍﾟﾀﾞﾙｼﾘﾝﾀﾞ	○		○		110
FOOT PEDAL CYLINDER (CLUTCH) ﾌｯﾄﾍﾟﾀﾞﾙｼﾘﾝﾀﾞ	○		○		110A
FOOT PEDAL CYLINDER (TOR-CON) ﾌｯﾄﾍﾟﾀﾞﾙｼﾘﾝﾀﾞ		○		○	111
FOOT PEDAL CYLINDER (TOR-CON) ﾌｯﾄﾍﾟﾀﾞﾙｼﾘﾝﾀﾞ		○		○	111A
BRAKE PIPE (CLUTCH) ﾌﾞﾚｰｷﾊﾟｲﾌﾟ	○		○		112
BRAKE PIPE (TOR-CON) ﾌﾞﾚｰｷﾊﾟｲﾌﾟ		○		○	113
FOOT PEDAL PARTS ﾌｯﾄﾍﾟﾀﾞﾙﾊﾟｰﾂ	○	○	○	○	114
CLUTCH MASTER CYLINDER (CLUTCH) ｸﾗｯﾁﾏｽﾀｼﾘﾝﾀﾞ	○		○		115
BRAKE MASTER CYLINDER ﾌﾞﾚｰｷﾏｽﾀｼﾘﾝﾀﾞ	○	○	○	○	116
CLUTCH RELEASE CYLINDER (CLUTCH) ｸﾗｯﾁﾘﾘｰｽｼﾘﾝﾀﾞ	○		○		117
BRAKE LEVER ﾌﾞﾚｰｷﾚﾊﾞｰ	○	○	○	○	118
BRAKE LEVER [PLR] ﾌﾞﾚｰｷﾚﾊﾞｰ	○	○	○	○	119

CONTENTS　目次

a	FD20C3Z	c	FD25C3Z
b	FD20T3Z	d	FD25T3Z

CHASSIS ｼｬｰｼ

SECTION　部門	a	b	c	d	FIG.NO.
FRAME ﾌﾚｰﾑ	○	○	○	○	120
OIL TANK ｵｲﾙﾀﾝｸ	○	○	○	○	121
OIL CAP & LEVEL ｵｲﾙｷｬｯﾌﾟ&ﾚﾍﾞﾙ	○	○	○	○	122
OIL CAP & LEVEL ｵｲﾙｷｬｯﾌﾟ&ﾚﾍﾞﾙ	○	○	○	○	122A
FUEL TANK ﾌｭｰｴﾙﾀﾝｸ	○	○	○	○	123
BALANCE WEIGHT ﾊﾞﾗﾝｽｳｴｲﾄ	○	○	○	○	124
BALANCE WEIGHT ﾊﾞﾗﾝｽｳｴｲﾄ	○	○	○	○	124A
BALANCE WEIGHT [HC] ﾊﾞﾗﾝｽｳｴｲﾄ	○	○	○	○	125
BALANCE WEIGHT [HC] ﾊﾞﾗﾝｽｳｴｲﾄ	○	○	○	○	125A
FRONT GUARD ﾌﾛﾝﾄｶﾞｰﾄﾞ	○	○	○	○	126
BONNET ﾎﾞﾝﾈｯﾄ	○	○	○	○	127
RADIATOR COVER ﾗｼﾞｴｰﾀｶﾊﾞｰ	○	○	○	○	128
BONNET HINGE ﾎﾞﾝﾈｯﾄﾋﾝｼﾞ	○	○	○	○	129
FLOOR BOARD ﾌﾛｱﾎﾞｰﾄﾞ	○	○	○	○	130
FLOOR BOARD ﾌﾛｱﾎﾞｰﾄﾞ	○	○	○	○	131A
FLOOR BOARD ﾌﾛｱﾎﾞｰﾄﾞ	○	○	○	○	131B
STEP & FLOOR MAT ｽﾃｯﾌﾟ&ﾌﾛｱﾏｯﾄ	○	○	○	○	132
FRONT COVER (CLUTCH) ﾌﾛﾝﾄｶﾊﾞｰ	○		○		133
FRONT COVER (TOR-CON) ﾌﾛﾝﾄｶﾊﾞｰ		○		○	134
SIDE COVER ｻｲﾄﾞｶﾊﾞｰ	○	○	○	○	135
FRONT SIDE COVER ﾌﾛﾝﾄｻｲﾄﾞｶﾊﾞｰ	○	○	○	○	136

CONTENTS　目次

a	FD20C3Z	c	FD25C3Z
b	FD20T3Z	d	FD25T3Z

CHASSIS ｼｬｰｼ

SECTION　部門	a	b	c	d	FIG.NO.
SEAT ｼｰﾄ	○	○	○	○	137
SEAT [HGL] ｼｰﾄ	○	○	○	○	138
SEAT [SIL] ｼｰﾄ	○	○	○	○	139
SEAT [SIL] ｼｰﾄ	○	○	○	○	139A
SEAT [OKM] ｼｰﾄ	○	○	○	○	140
SEAT [OKM/SIL] ｼｰﾄ	○	○	○	○	141
PUMP UNIT ﾎﾟﾝﾌﾟﾕﾆｯﾄ	○	○	○	○	142
CONTROL VALVE [2SV] ｺﾝﾄﾛｰﾙﾊﾞﾙﾌﾞ	○	○	○	○	143
CONTROL VALVE [3SV] ｺﾝﾄﾛｰﾙﾊﾞﾙﾌﾞ	○	○	○	○	144
CONTROL VALVE [4SV] ｺﾝﾄﾛｰﾙﾊﾞﾙﾌﾞ	○	○	○	○	145
CONTROL VALVE [5SV] ｺﾝﾄﾛｰﾙﾊﾞﾙﾌﾞ	○	○	○	○	146
CONTROL VALVE FITTING ｺﾝﾄﾛｰﾙﾊﾞﾙﾌﾞﾌｨｯﾃｨﾝｸﾞ	○	○	○	○	147
VALVE CONTROL [2SV] ﾊﾞﾙﾌﾞｺﾝﾄﾛｰﾙ	○	○	○	○	148
VALVE CONTROL [3SV] ﾊﾞﾙﾌﾞｺﾝﾄﾛｰﾙ	○	○	○	○	149
VALVE CONTROL [4SV] ﾊﾞﾙﾌﾞｺﾝﾄﾛｰﾙ	○	○	○	○	150
VALVE CONTROL [5SV] ﾊﾞﾙﾌﾞｺﾝﾄﾛｰﾙ	○	○	○	○	151
VALVE CONTROL KNOB ﾊﾞﾙﾌﾞｺﾝﾄﾛｰﾙﾉﾌﾞ	○	○	○	○	152
FRONT COVER ﾌﾛﾝﾄｶﾊﾞｰ	○	○	○	○	153
REAR COVER [VLL][SIL] ﾘﾔｶﾊﾞｰ	○	○	○	○	154
COMBINATION VALVE ｺﾝﾋﾞﾈｰｼｮﾝﾊﾞﾙﾌﾞ	○	○	○	○	155
VALVE SECTION [3SV][4SV][5SV] ﾊﾞﾙﾌﾞｾｸｼｮﾝ	○	○	○	○	156

CONTENTS　目次

a	FD20C3Z	c	FD25C3Z
b	FD20T3Z	d	FD25T3Z

CHASSIS ｼｬｰｼ

SECTION　部門	a	b	c	d	FIG.NO.
HYDRAULIC LINE (MAIN)(1/4) ﾊｲﾄﾞﾛﾘｯｸﾗｲﾝ(ﾒｲﾝ)(1/4)	○	○	○	○	157
HYDRAULIC LINE (MAIN)(2/4) ﾊｲﾄﾞﾛﾘｯｸﾗｲﾝ(ﾒｲﾝ)(2/4)	○	○	○	○	158
HYDRAULIC LINE (MAIN)(3/4) ﾊｲﾄﾞﾛﾘｯｸﾗｲﾝ(ﾒｲﾝ)(3/4)	○	○	○	○	159
HYDRAULIC LINE (MAIN)(4/4) ﾊｲﾄﾞﾛﾘｯｸﾗｲﾝ(ﾒｲﾝ)(4/4)	○	○	○	○	160
HYDRAULIC LINE (TOR-CON) ﾊｲﾄﾞﾛﾘｯｸﾗｲﾝ(ﾄﾙｺﾝ)		○		○	161
TILT CYLINDER ﾃｨﾙﾄｼﾘﾝﾀﾞ	○	○	○	○	162
TILT CYLINDER ﾃｨﾙﾄｼﾘﾝﾀﾞ	○	○	○	○	162A
TILT BOOT [TLB][FC] ﾃｨﾙﾄﾌﾞｰﾂ	○	○	○	○	163
TILT BOOT [TLB][FC] ﾃｨﾙﾄﾌﾞｰﾂ	○	○	○	○	163A
DECAL (1/2) ﾃﾞｶﾙ(1/2)	○	○	○	○	164
DECAL (2/2) ﾃﾞｶﾙ(2/2)	○	○	○	○	165
DECAL (2/2)[EXB] ﾃﾞｶﾙ(2/2)	○	○	○	○	166
SERVICE TOOL ｻｰﾋﾞｽﾂｰﾙ	○	○	○	○	167
FRONT GLASS [AW061][AW071] ﾌﾛﾝﾄｶﾞﾗｽ	○	○	○	○	168
FRONT GLASS [AW061][AW071] ﾌﾛﾝﾄｶﾞﾗｽ	○	○	○	○	168A
FRONT GLASS WIPER [AW061][AW071] ﾌﾛﾝﾄｶﾞﾗｽﾜｲﾊﾟ	○	○	○	○	169
FRONT GLASS WIPER [AW061][AW071] ﾌﾛﾝﾄｶﾞﾗｽﾜｲﾊﾟ	○	○	○	○	169A
WINDOW WASHER [AW071/WAS071] ｳｨﾝﾄﾞｳｫｯｼｬ	○	○	○	○	170
CANVAS CABIN [AW061] ｷｬﾝﾊﾞｽｷｬﾋﾞﾝ	○	○	○	○	171
FIRE EXTINGUISHER [FE] ﾌｧｲﾔｲｸｽﾃｨﾝｸﾞｲｯｼｬ	○	○	○	○	172
FIRE EXTINGUISHER [FE M] ﾌｧｲﾔｲｸｽﾃｨﾝｸﾞｲｯｼｬ	○	○	○	○	173

CONTENTS　目次

MAST ﾏｽﾄ

a	FD20C3Z	c	FD25C3Z
b	FD20T3Z	d	FD25T3Z

SECTION　部門	a	b	c	d	FIG.NO.
[VM2N5]					
FORK [VM2N5] ﾌｫｰｸ	○	○	○	○	174
LIFT BRACKET [VM2N5] ﾘﾌﾄﾌﾞﾗｹｯﾄ	○	○	○	○	175
BACKREST [VM2N5] ﾊﾞｯｸﾚｽﾄ	○	○	○	○	176
MAST [VM2N5] ﾏｽﾄ	○	○	○	○	177
TILT GAUGE [VM2N5/(TG,PPC,PR,PRC,PRX,MPC,MPX)] ﾃｨﾙﾄｹﾞｰｼﾞ	○	○	○	○	178
LIFT CYLINDER [VM2N5] ﾘﾌﾄｼﾘﾝﾀﾞ	○	○	○	○	179
MAST PIPING [VM2N5] ﾏｽﾄﾊﾟｲﾋﾟﾝｸﾞ	○	○	○	○	180
[VFM2N5]					
FORK [VFM2N5] ﾌｫｰｸ	○	○	○	○	181
LIFT BRACKET [VFM2N5] ﾘﾌﾄﾌﾞﾗｹｯﾄ	○	○	○	○	182
BACKREST [VFM2N5] ﾊﾞｯｸﾚｽﾄ	○	○	○	○	183
MAST [VFM2N5] ﾏｽﾄ	○	○	○	○	184
TILT GAUGE[VFM2N5/(TG,PPC,PR,PRC,MPC) ﾃｨﾙﾄｹﾞｰｼﾞ	○	○	○	○	185
LIFT CYLINDER (FRONT) [VFM2N5] ﾘﾌﾄｼﾘﾝﾀﾞ(ﾌﾛﾝﾄ)	○	○	○	○	186
LIFT CYLINDER (REAR) [VFM2N5] ﾘﾌﾄｼﾘﾝﾀﾞ(ﾘﾔｰ)	○	○	○	○	187
MAST PIPING [VFM2N5] ﾏｽﾄﾊﾟｲﾋﾟﾝｸﾞ	○	○	○	○	188

CONTENTS　目次

MAST マスト

a	FD20C3Z	c	FD25C3Z
b	FD20T3Z	d	FD25T3Z

SECTION　部門	a	b	c	d	FIG.NO.
[VFM2N4]					
FORK [VFM2N4] ﾌｫｰｸ	○	○	○	○	189
LIFT BRACKET [VFM2N4] ﾘﾌﾄﾌﾞﾗｹｯﾄ	○	○	○	○	190
BACKREST [VFM2N4] ﾊﾞｯｸﾚｽﾄ	○	○	○	○	191
MAST [VFM2N4] ﾏｽﾄ	○	○	○	○	192
LIFT CYLINDER (FRONT)[VFM2N4] ﾘﾌﾄｼﾘﾝﾀﾞ(ﾌﾛﾝﾄ)	○	○	○	○	193
LIFT CYLINDER (REAR)[VFM2N4] ﾘﾌﾄｼﾘﾝﾀﾞ(ﾘﾔｰ)	○	○	○	○	194
MAST PIPING [VFM2N4] ﾏｽﾄﾊﾟｲﾋﾟﾝｸﾞ	○	○	○	○	195
[VFHM2N5]					
FORK [VFHM2N5] ﾌｫｰｸ	○	○	○	○	196
LIFT BRACKET [VFHM2N5] ﾘﾌﾄﾌﾞﾗｹｯﾄ	○	○	○	○	197
BACKREST [VFHM2N5] ﾊﾞｯｸﾚｽﾄ	○	○	○	○	198
MAST [VFHM2N5] ﾏｽﾄ	○	○	○	○	199
TILT GAUGE [VFHM2N5/(TG,PPC,PR,PRC,MPC)] ﾃｨﾙﾄｹﾞｰｼﾞ	○	○	○	○	200
LIFT CYLINDER (FRONT)[VFHM2N5] ﾘﾌﾄｼﾘﾝﾀﾞ(ﾌﾛﾝﾄ)	○	○	○	○	201
LIFT CYLINDER (REAR)[VFHM2N5] ﾘﾌﾄｼﾘﾝﾀﾞ(ﾘﾔｰ)	○	○	○	○	202
MAST PIPING [VFHM2N5] ﾏｽﾄﾊﾟｲﾋﾟﾝｸﾞ	○	○	○	○	203

CONTENTS　目次

MAST ﾏｽﾄ

a	FD20C3Z	c	FD25C3Z
b	FD20T3Z	d	FD25T3Z

SECTION　部門	a	b	c	d	FIG.NO.
[VFHM2N4]					
FORK [VFHM2N4] ﾌｫｰｸ	○	○	○	○	204
LIFT BRACKET [VFHM2N4] ﾘﾌﾄﾌﾞﾗｹｯﾄ	○	○	○	○	205
BACKREST [VFHM2N4] ﾊﾞｯｸﾚｽﾄ	○	○	○	○	206
MAST [VFHM2N4] ﾏｽﾄ	○	○	○	○	207
LIFT CYLINDER (FRONT)[VFHM2N4] ﾘﾌﾄｼﾘﾝﾀﾞ(ﾌﾛﾝﾄ)	○	○	○	○	208
LIFT CYLINDER (REAR)[VFHM2N4] ﾘﾌﾄｼﾘﾝﾀﾞ(ﾘﾔｰ)	○	○	○	○	209
MAST PIPING [VFHM2N4] ﾏｽﾄﾊﾟｲﾋﾟﾝｸﾞ	○	○	○	○	210

M E M O

FIG.1 ENGINE MOUNT

(F7Z21020) ｴﾝｼﾞﾝﾏｳﾝﾄ

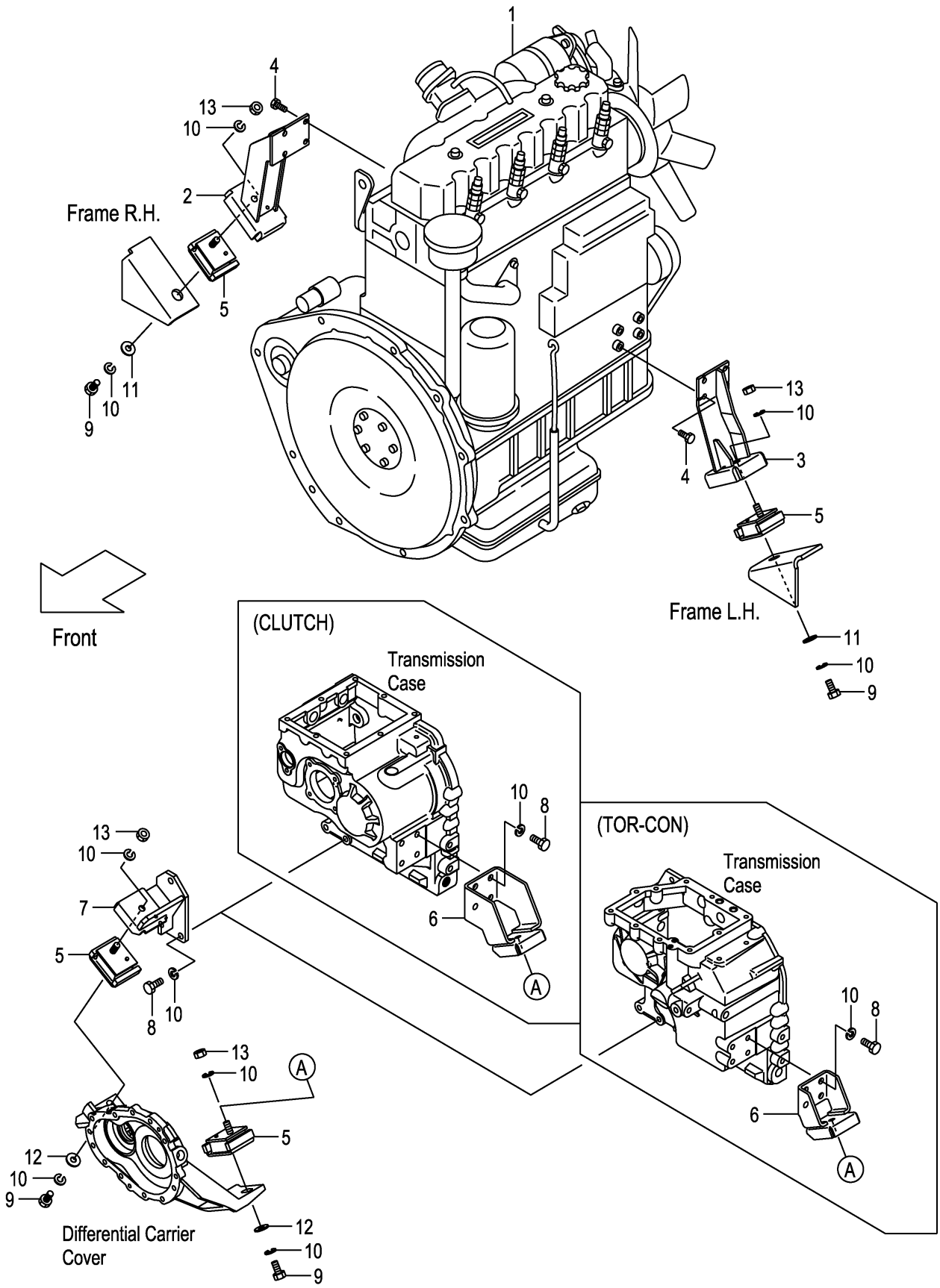

FIG.1

A:FD20C3Z FD25C3Z
B:FD20T3Z FD25T3Z

(F7Z21020)

Item No	Part No.	Mark	Description		Req'd	Remarks : Serial No.
1	22U51-00101		ENGINE,C240	ｴﾝｼﾞﾝ	1	
2	22U51-00201		BRACKET,ENGINE,RH	ﾌﾞﾗｹｯﾄ	1	
3	22U51-00212		BRACKET,ENGINE,LH	ﾌﾞﾗｹｯﾄ	1	
4	01217-10030		BOLT	ﾎﾞﾙﾄ	8	
5	22N51-00161		RUBBER,CUSHION	ﾗﾊﾞｰ	4	
6	22N41-00201		BRACKET,FRONT,LH	ﾌﾞﾗｹｯﾄ	1	A
-	22N51-00201		BRACKET,FRONT,LH	ﾌﾞﾗｹｯﾄ	1	B
7	22N51-00211		BRACKET,FRONT,RH	ﾌﾞﾗｹｯﾄ	1	
8	01103-12030		BOLT	ﾎﾞﾙﾄ	7	
9	01103-12025		BOLT	ﾎﾞﾙﾄ	4	
10	02011-00012		WASHER	ﾜｯｼｬ	15	
11	256C6-32011		WASHER	ﾜｯｼｬ	2	
12	256C9-52372		WASHER	ﾜｯｼｬ	2	
13	01400-00012		NUT	ﾅｯﾄ	4	

FIG.2 AIR CLEANER

(F7Z21040) エアークリーナ

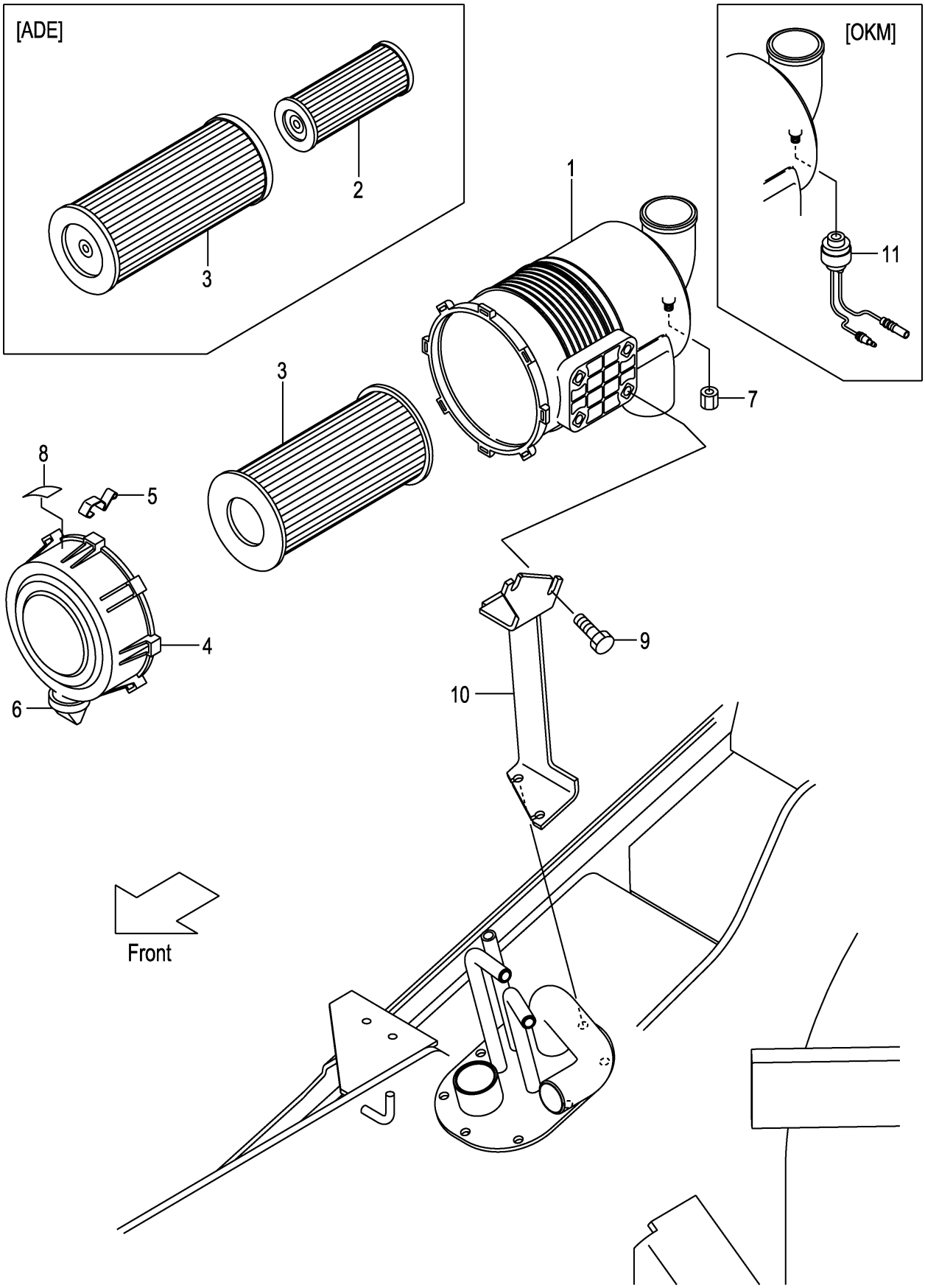

FIG.2

(F7Z21040)

A:FD20C3Z FD20T3Z FD25C3Z FD25T3Z

Item No	Part No.	Mark	Description		Req'd	Remarks : Serial No.
A1	216G1-02451		CLEANER-ASSY,AIR	ｴｱｰｸﾘｰﾅｱｯｾﾝ	1	INC.1,3-8
-	516G0-60101		CLEANER-ASSY,AIR	ｴｱｰｸﾘｰﾅｱｯｾﾝ	1	[ADE] INC.1-8
1	216G1-02481		BODY	ﾎﾞﾃﾞｨ	1	
2	213T1-02021		ELEMENT,INNER	ｴﾚﾒﾝﾄ	1	[ADE]
3	256C1-08011		ELEMENT,OUTER	ｴﾚﾒﾝﾄ	1	
-	213T1-02011		ELEMENT,OUTER	ｴﾚﾒﾝﾄ	1	[ADE]
4	216G1-02461		COVER	ｶﾊﾞｰ	1	
5	216G1-02471		LATCH	ﾗｯﾁ	3	
6	216G1-02491		VALVE,VACUATOR	ﾊﾞﾙﾌﾞ	1	
7	53651-12551		CAP,NIPPLE	ｷｬｯﾌﾟ	1	
8	216G1-02501		LABEL	ﾗﾍﾞﾙ	1	
-	516G0-62011		LABEL	ﾗﾍﾞﾙ	1	[ADE]
9	01183-08016		BOLT	ﾎﾞﾙﾄ	2	
10	22U51-00301		BRACKET,AIR-CLEANER	ﾌﾞﾗｹｯﾄ	1	
11	522A1-10201		SENSOR,762MM	ｾﾝｻ	1	[OKM]

FIG.3 AIR DUCT

(F7Z21060) エアーダクト

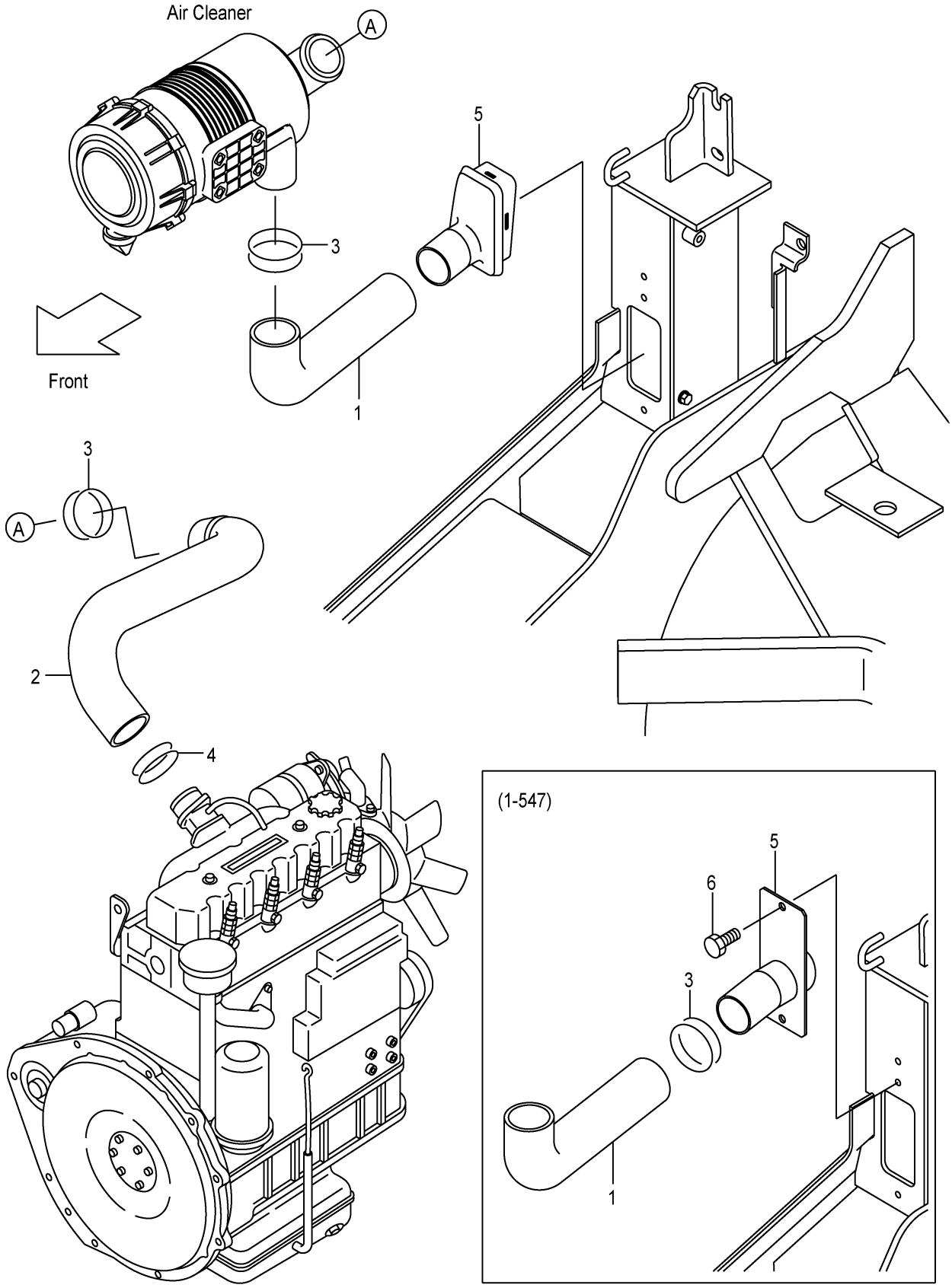

FIG.3

(F7Z21060)

A:FD20C3Z FD20T3Z FD25C3Z FD25T3Z

Item No	Part No.	Mark	Description		Req'd	Remarks : Serial No.
1	22B51-02201		HOSE,AIR-DUCT	ﾎｰｽ	1	
2	217M1-02001		HOSE,AIR-INTAKE	ﾎｰｽ	1	
3	04911-00060		CLIP	ｸﾘｯﾌﾟ	3	1-547
-	04911-00060		CLIP	ｸﾘｯﾌﾟ	2	548-
4	04911-00065		CLIP	ｸﾘｯﾌﾟ	1	
5	22U51-02601		PIPE,DUCT	ﾊﾟｲﾌﾟ	1	1-547
-	22U51-02501		DUCT,INTAKE	ﾀﾞｸﾄ	1	548-
6	01185-08016		BOLT	ﾎﾞﾙﾄ	2	1-547

FIG.4 AIR DUCT [CAKB]

(F7Z21080) エアーダクト

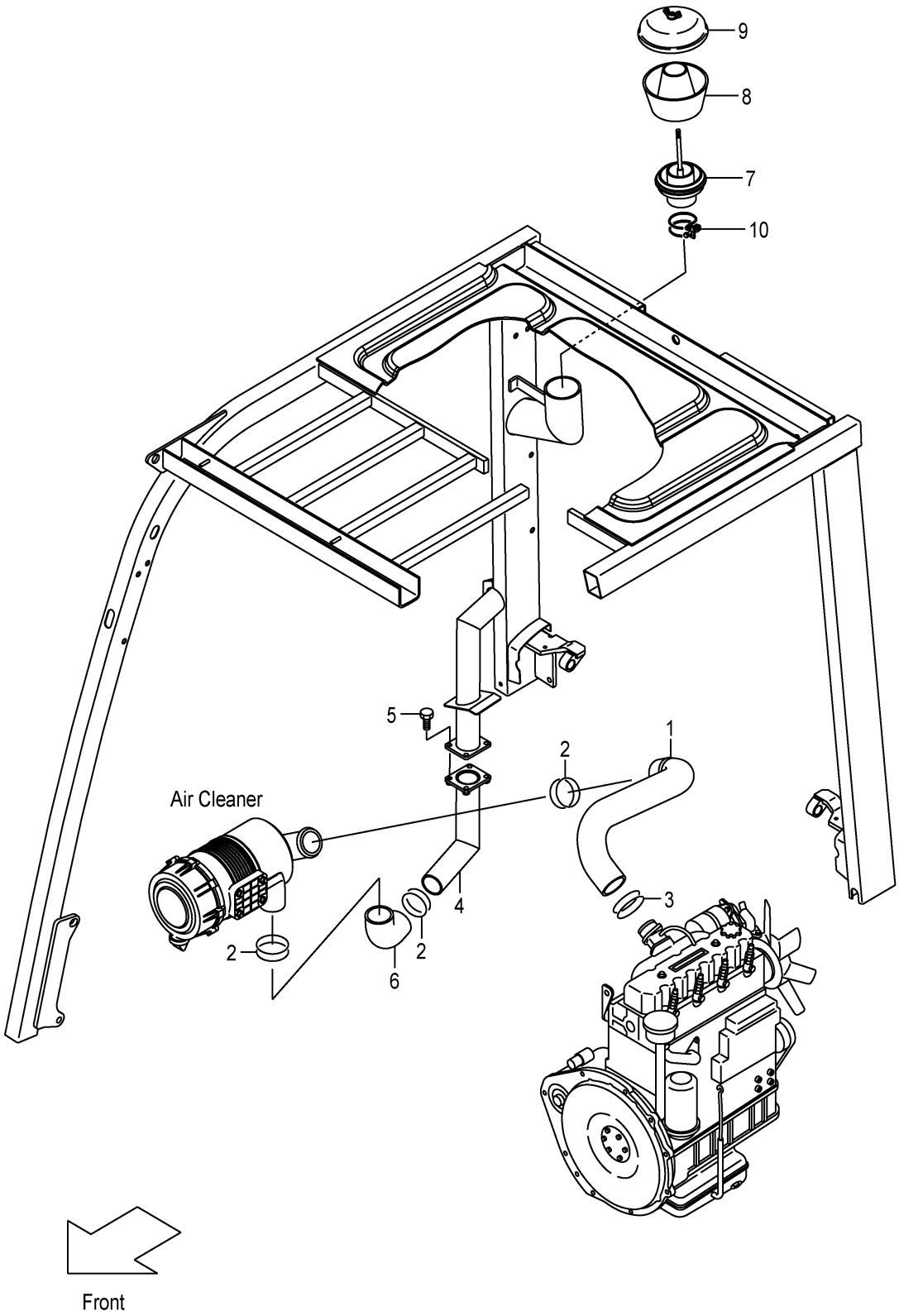

FIG.4

(F7Z21080)

A:FD20C3Z FD20T3Z FD25C3Z FD25T3Z

Item No	Part No.	Mark	Description		Req'd	Remarks : Serial No.
1	217M1-02001		HOSE,AIR-INTAKE	ﾎｰｽ	1	[CAKB]
2	04911-00060		CLIP	ｸﾘｯﾌﾟ	3	[CAKB]
3	04911-00065		CLIP	ｸﾘｯﾌﾟ	1	[CAKB]
4	52U50-92201		PIPE,INTAKE	ﾊﾟｲﾌﾟ	1	[CAKB]
5	01183-08020		BOLT	ﾎﾞﾙﾄ	4	[CAKB]
6	50A70-92251		HOSE,AIR-DUCT	ﾎｰｽ	1	[CAKB]
A1	522B0-92021		CLEANER-ASSY,PRE	ﾌﾟﾚｸﾘｰﾅｱｯｾﾝ	1	[CAKB] INC.7-9
7	522B0-92031		SLEEVE	ｽﾘｰﾌﾞ	1	[CAKB]
8	522B0-92041		BODY	ﾎﾞﾃﾞｨ	1	[CAKB]
9	522B0-92051		COVER	ｶﾊﾞｰ	1	[CAKB]
10	04911-00090		CLIP	ｸﾘｯﾌﾟ	1	[CAKB]

FIG.5 COOLING UNIT (CLUTCH)

(F7Z22110) クーリング゛ユニット

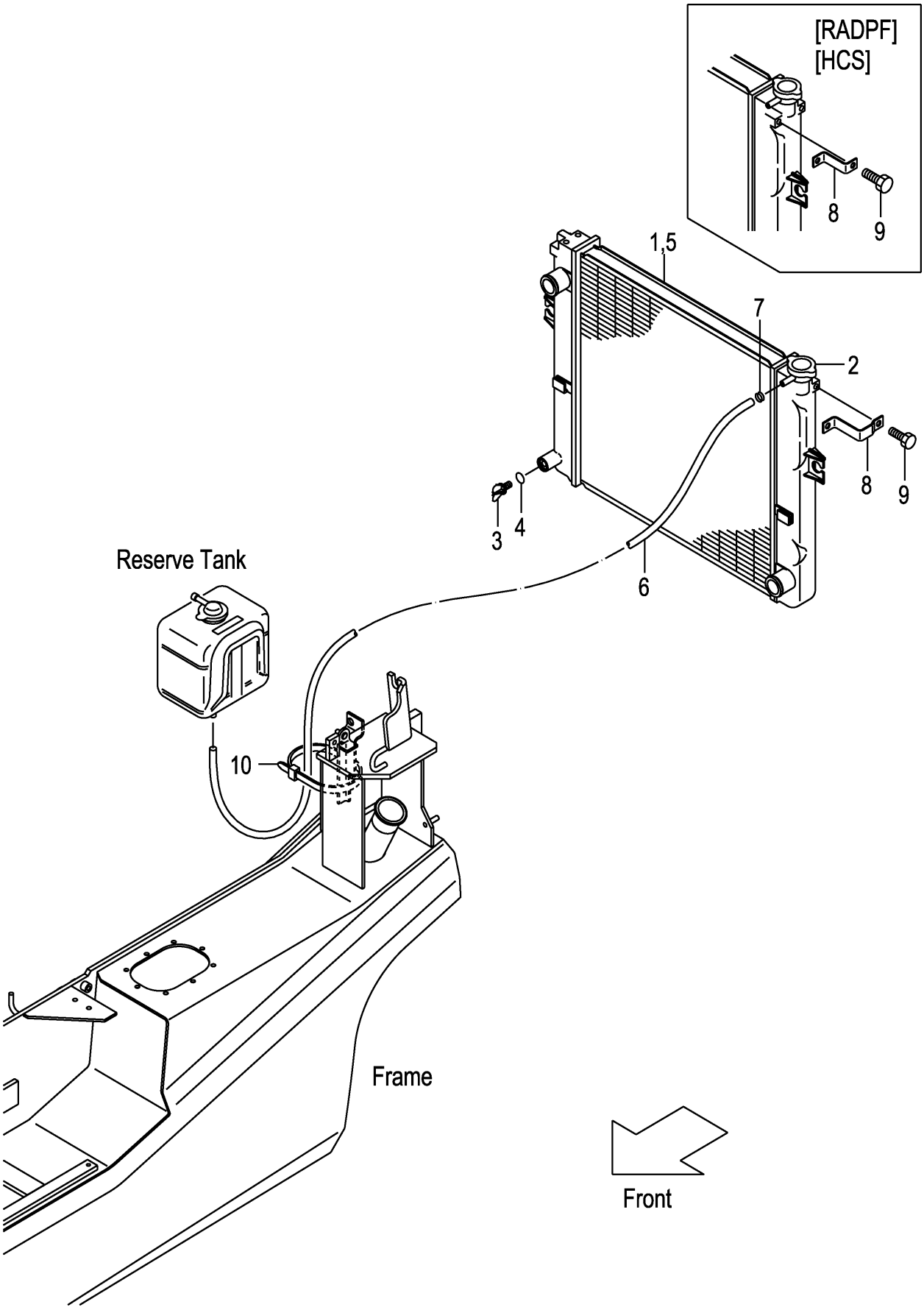

FIG.5

(F7Z22110)

A:FD20C3Z FD25C3Z

Item No	Part No.	Mark	Description		Req'd	Remarks : Serial No.
A1	239A2-10102		RADIATOR-ASSY	ﾗｼﾞｴｰﾀｱｯｾﾝ	1	INC.1-7
-	539A6-60302		RADIATOR-ASSY	ﾗｼﾞｴｰﾀｱｯｾﾝ	1	[RADPF][HCS] INC.1-7
1	NO PART NO.	#	RADIATOR	ﾗｼﾞｴｰﾀ	1	
-	NO PART NO.	#	RADIATOR	ﾗｼﾞｴｰﾀ	1	[RADPF][HCS]
2	222A2-10211		CAP	ｷｬｯﾌﾟ	1	
3	234A2-12201		COCK	ｺｯｸ	1	
4	234A2-12211		O-RING	Oﾘﾝｸﾞ	1	
5	NO PART NO.	#	NUT	ﾅｯﾄ	3	
-	NO PART NO.	#	NUT	ﾅｯﾄ	4	[RADPF][HCS]
6	NO PART NO.		HOSE	ﾎｰｽ	1	
7	23772-12071		CLIP	ｸﾘｯﾌﾟ	1	
8	239A2-12141		BRACKET	ﾌﾞﾗｹｯﾄ	1	
-	239B2-12141		BRACKET	ﾌﾞﾗｹｯﾄ	1	[RADPF][HCS]
9	01185-08016		BOLT	ﾎﾞﾙﾄ	1	
10	29590-64501		BAND	ﾊﾞﾝﾄﾞ	1	

FIG.6 COOLING UNIT (TOR-CON)

(F7Z22120) クーリング゛ユニット

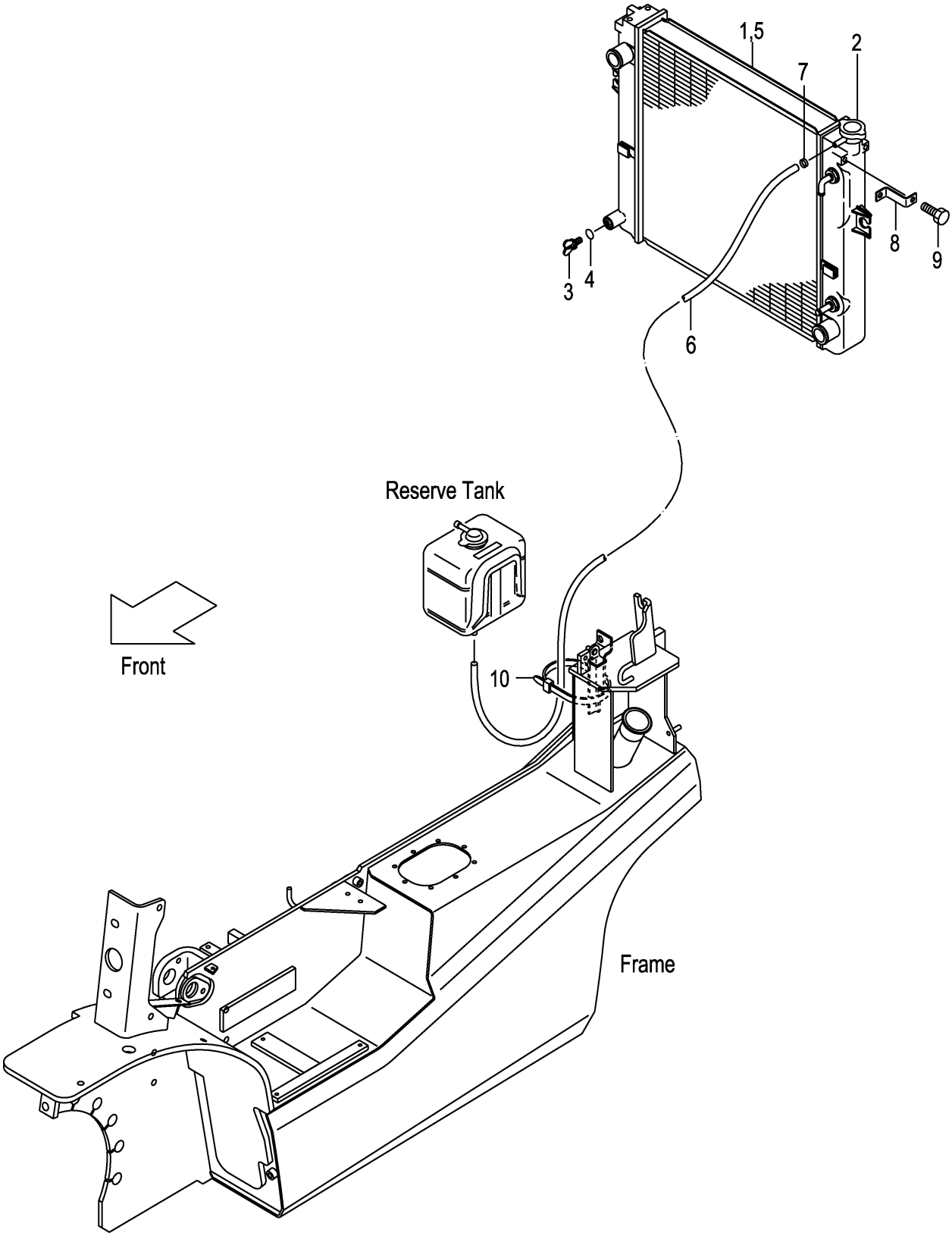

FIG.6

(F7Z22120)

A:FD20T3Z FD25T3Z

Item No	Part No.	Mark	Description		Req'd	Remarks : Serial No.
A1	239B2-10102		RADIATOR-ASSY	ﾗｼﾞｴｰﾀｱｯｾﾝ	1	INC.1-7
-	538B6-60302		RADIATOR-ASSY	ﾗｼﾞｴｰﾀｱｯｾﾝ	1	[RADPF][HCS] INC.1-7
1	NO PART NO.	#	RADIATOR	ﾗｼﾞｴｰﾀ	1	
-	NO PART NO.	#	RADIATOR	ﾗｼﾞｴｰﾀ	1	[RADPF][HCS]
2	222A2-10211		CAP	ｷｬｯﾌﾟ	1	
3	234A2-12201		COCK	ｺｯｸ	1	
4	234A2-12211		O-RING	Oﾘﾝｸﾞ	1	
5	NO PART NO.	#	NUT	ﾅｯﾄ	4	
6	NO PART NO.		HOSE	ﾎｰｽ	1	
7	23772-12071		CLIP	ｸﾘｯﾌﾟ	1	
8	239B2-12141		BRACKET	ﾌﾞﾗｹｯﾄ	1	
9	01185-08016		BOLT	ﾎﾞﾙﾄ	1	
10	29590-64501		BAND	ﾊﾞﾝﾄﾞ	1	

FIG.7 FAN SHROUD

(F7Z22140) ﾌｧﾝｼｭﾗｳﾄﾞ

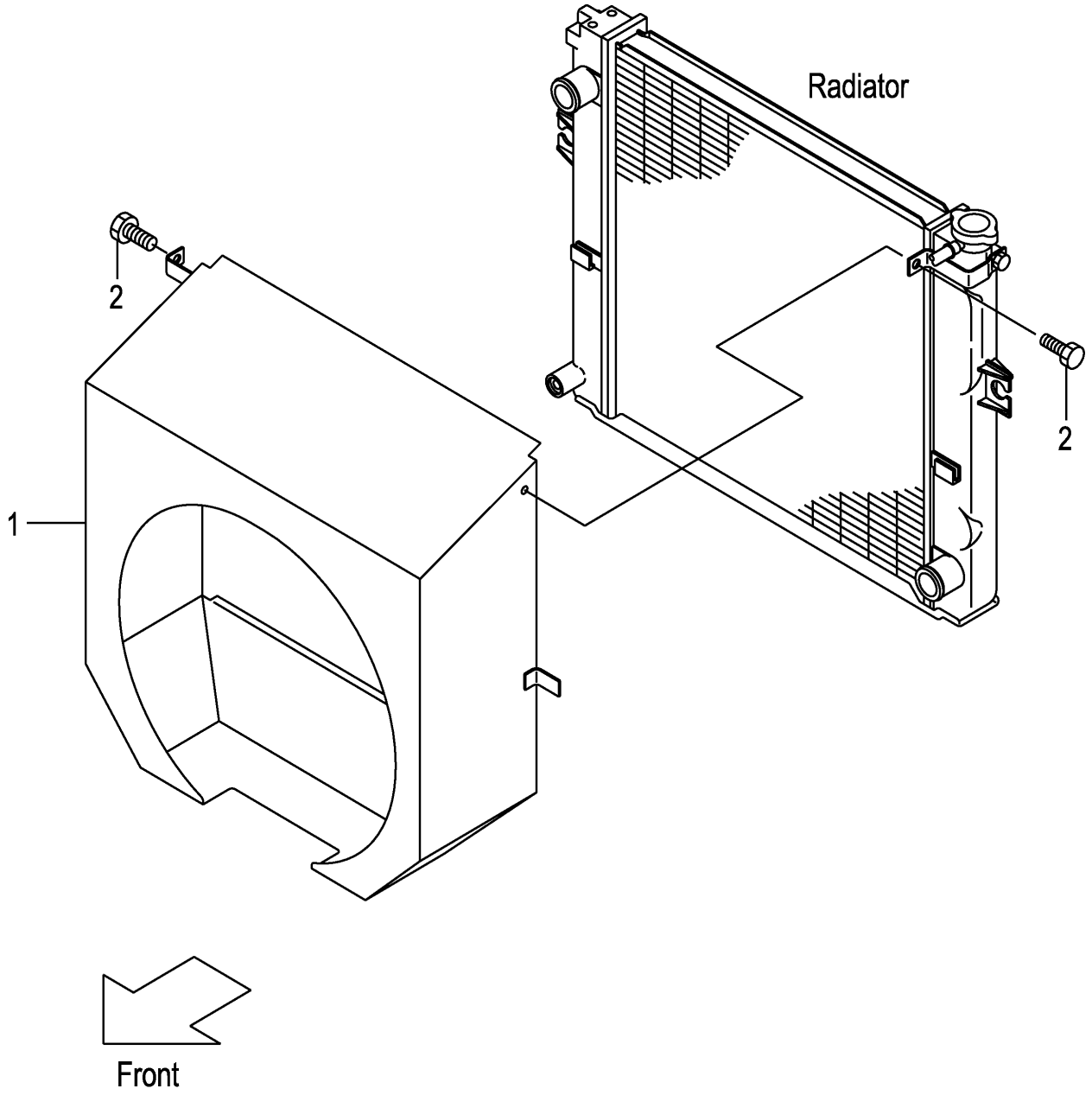

FIG.7

(F7Z22140)

A:FD20C3Z FD20T3Z FD25C3Z FD25T3Z

Item No	Part No.	Mark	Description	Req'd	Remarks : Serial No.
1	22U52-12201		SHROUD,FAN ｼｭﾗｳﾄﾞ	1	
2	01185-08016		BOLT ﾎﾞﾙﾄ	2	

FIG.8 RADIATOR PARTS & RESERVE TANK

(F7Z22150) ﾗｼﾞｴｰﾀﾊﾟｰﾂ&ﾘｻﾞｰﾌﾞﾀﾝｸ

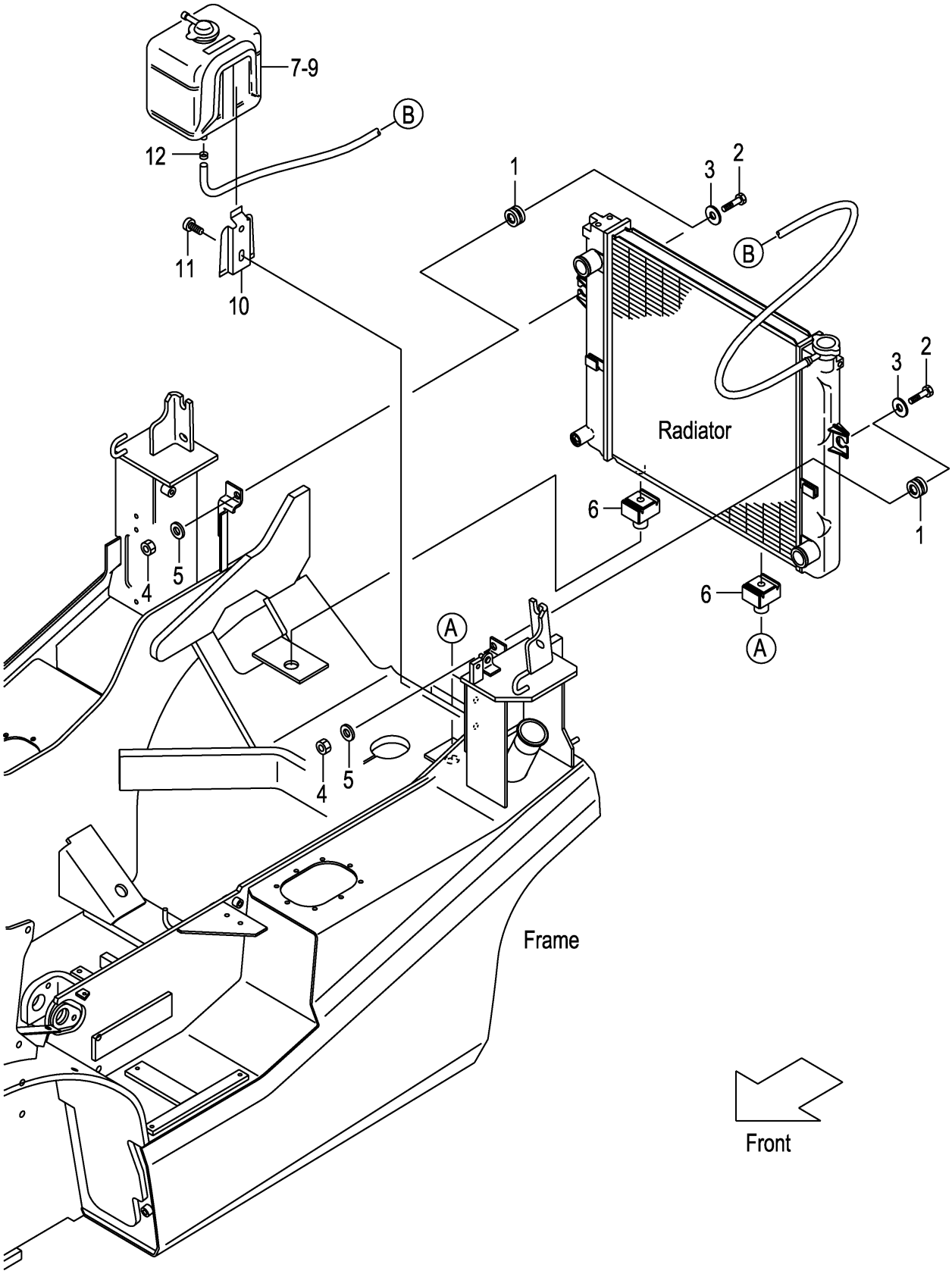

FIG.8

(F7Z22150)

A:FD20C3Z FD20T3Z FD25C3Z FD25T3Z

Item No	Part No.	Mark	Description		Req'd	Remarks : Serial No.
1	214A2-12001		RUBBER	ﾗﾊﾞｰ	2	
2	214A2-12021		BOLT	ﾎﾞﾙﾄ	2	
3	22252-32251		WASHER	ﾜｯｼｬ	2	
4	23652-12051		NUT	ﾅｯﾄ	2	
5	02000-00010		WASHER	ﾜｯｼｬ	2	
6	239A2-12021		RUBBER	ﾗﾊﾞｰ	2	
7	214A2-12111		TANK,RESERVE	ﾀﾝｸ	1	INC.8,9
-	214A2-12121		TANK,RESERVE	ﾀﾝｸ	1	[OKM] INC.8,9
8	214A2-13001		CAP	ｷｬｯﾌﾟ	1	
9	214A2-13011		PACKING	ﾊﾟｯｷﾝｸﾞ	1	
10	214A2-12141		BRACKET	ﾌﾞﾗｹｯﾄ	1	
11	214A2-42611		SCREW	ｽｸﾘｭ	2	
12	214A2-12201		CLIP	ｸﾘｯﾌﾟ	1	

FIG.9 RADIATOR HOSE

(F7Z22170) ﾗｼﾞｴｰﾀﾎｰｽ

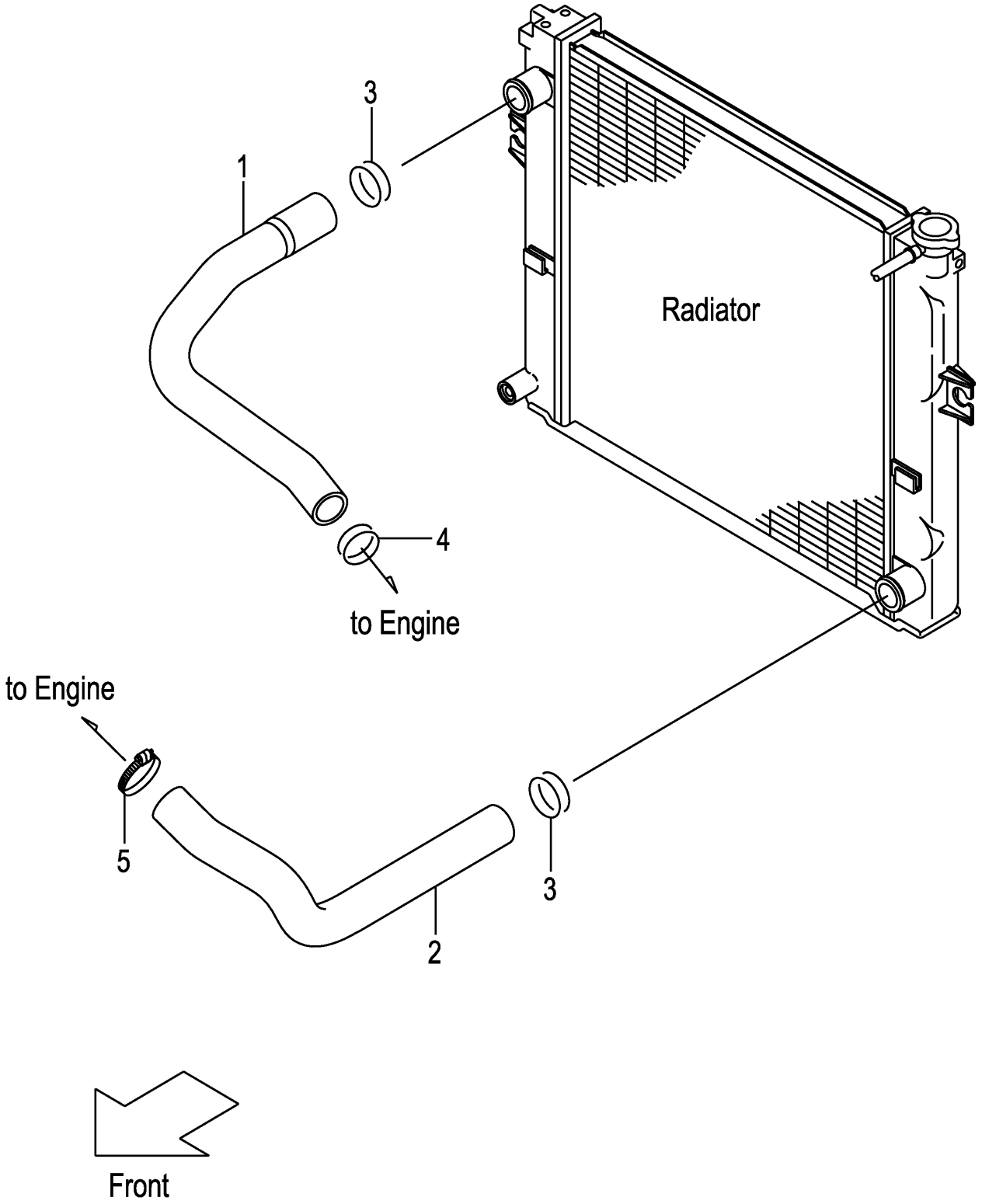

FIG.9

(F7Z22170)

A:FD20C3Z FD20T3Z FD25C3Z FD25T3Z

Item No	Part No.	Mark	Description		Req'd	Remarks : Serial No.
1	22U52-12001		HOSE,UPPER	ﾎｰｽ	1	
2	22U52-12011		HOSE,LOWER	ﾎｰｽ	1	
3	04911-00044		CLIP	ｸﾘｯﾌﾟ	2	
4	04911-00040		CLIP	ｸﾘｯﾌﾟ	1	
5	217M2-12221		CLAMP,HOSE	ｸﾗﾝﾌﾟ	1	

FIG.10 FUEL SYSTEM

(F7Z22220) フューエルシステム

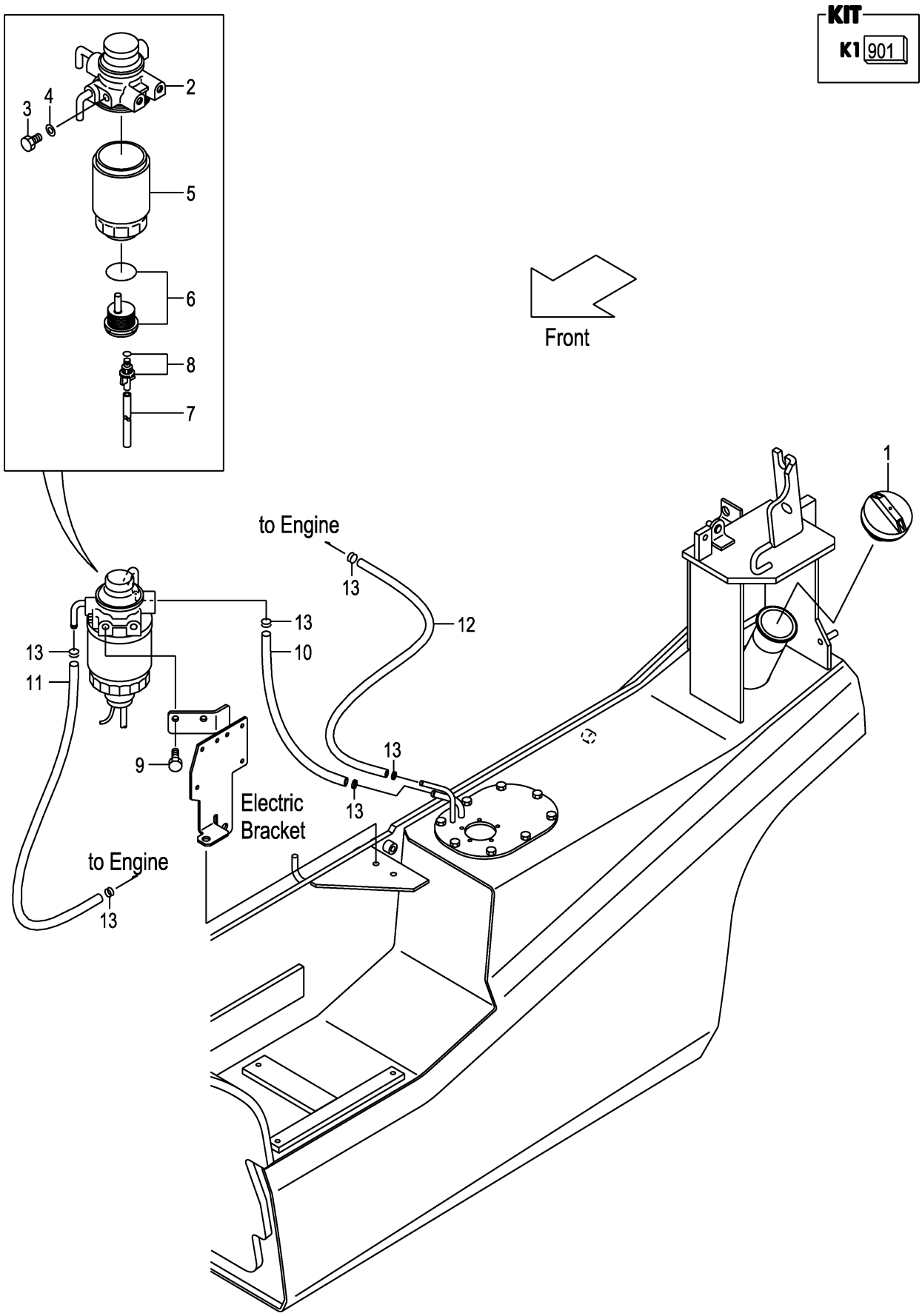

FIG.10

(F7Z22220)

A:FD20C3Z FD20T3Z FD25C3Z FD25T3Z

Item No	Part No.	Mark	Description		Req'd	Remarks : Serial No.
1	216G2-22051		CAP,FUEL	ｷｬｯﾌﾟ	1	
A1	24662-22032		FILTER-ASSY,FUEL	ﾌｭｰｴﾙﾌｨﾙﾀｱｯｾﾝ	1	INC.2-8
901	Z-8-94367-294-0	K1	KIT,SENSOR	ｾﾝｻｷｯﾄ	1	INC.6-8
2	NO PART NO.	#	BODY	ﾎﾞﾃﾞｨ	1	
3	Z-8-94132-674-0		PLUG	ﾌﾟﾗｸﾞ	1	
4	Z-8-94132-675-0		GASKET	ｶﾞｽｹｯﾄ	1	
5	20801-02141		CARTRIDGE	ｶｰﾄﾘｯｼﾞ	1	
6	NO PART NO.	#*	SENSOR	ｾﾝｻ	1	
7	Z-8-94367-956-0	*	HOSE	ﾎｰｽ	1	
8	Z-8-94367-957-0	*	PLUG	ﾌﾟﾗｸﾞ	1	
9	01183-08016		BOLT	ﾎﾞﾙﾄ	2	
10	24662-22131		HOSE,FUEL,7.5X270	ﾎｰｽ	1	
11	214A2-22071		HOSE,FUEL,7.5X550	ﾎｰｽ	1	
12	23322-22011		HOSE,FUEL,6.5X330	ﾎｰｽ	1	
13	22192-22091		CLIP	ｸﾘｯﾌﾟ	6	

FIG.11 EXHAUST SYSTEM

(F7Z22310) エキゾーストシステム

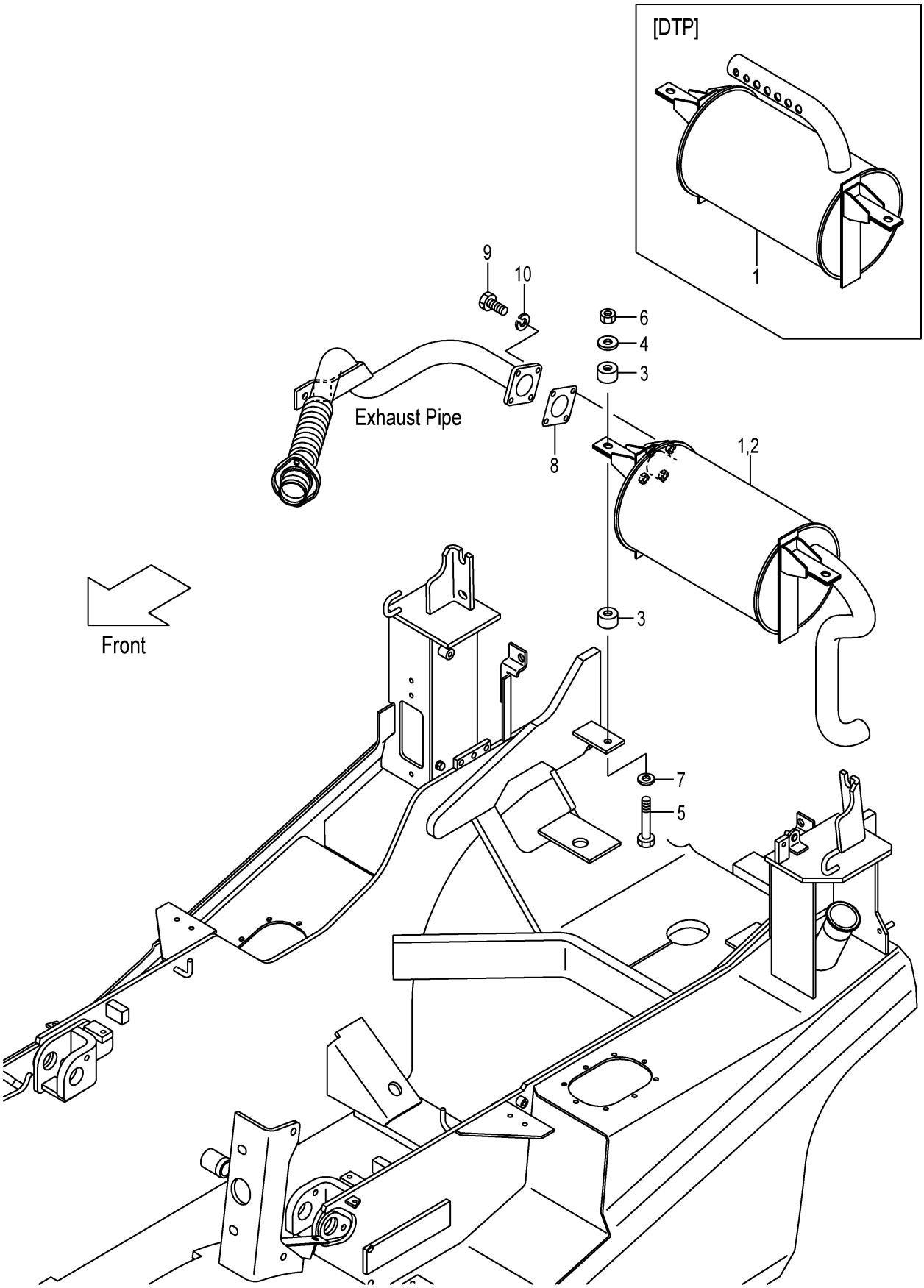

FIG.11

(F7Z22310)

A:FD20C3Z FD20T3Z FD25C3Z FD25T3Z

Item No	Part No.	Mark	Description		Req'd	Remarks : Serial No.
1	22N52-30101		MUFFLER,2T	ﾏﾌﾗ	1	
-	52N51-70101		MUFFLER,2T	ﾏﾌﾗ	1	[EPM] INC.2
-	52N51-70201		MUFFLER,2T	ﾏﾌﾗ	1	[CBM]
-	52N51-70301		MUFFLER	ﾏﾌﾗ	1	[DTP]
2	532A1-70201		CATALYST	ｷｬﾀﾘｽﾄ	1	[EPM]
3	22252-32241		RUBBER,CUSHION	ﾗﾊﾞｰ	4	
4	22252-32251		WASHER	ﾜｯｼｬ	2	
5	21232-32551		BOLT	ﾎﾞﾙﾄ	2	
6	23652-12051		NUT	ﾅｯﾄ	2	
7	02000-00010		WASHER	ﾜｯｼｬ	2	
8	217G2-32001		GASKET	ｶﾞｽｹｯﾄ	1	
9	01100-08030		BOLT	ﾎﾞﾙﾄ	4	
10	02010-00008		WASHER	ﾜｯｼｬ	4	

FIG.12 EXHAUST SYSTEM [TUE]

(F7Z22330) エキゾーストシステム

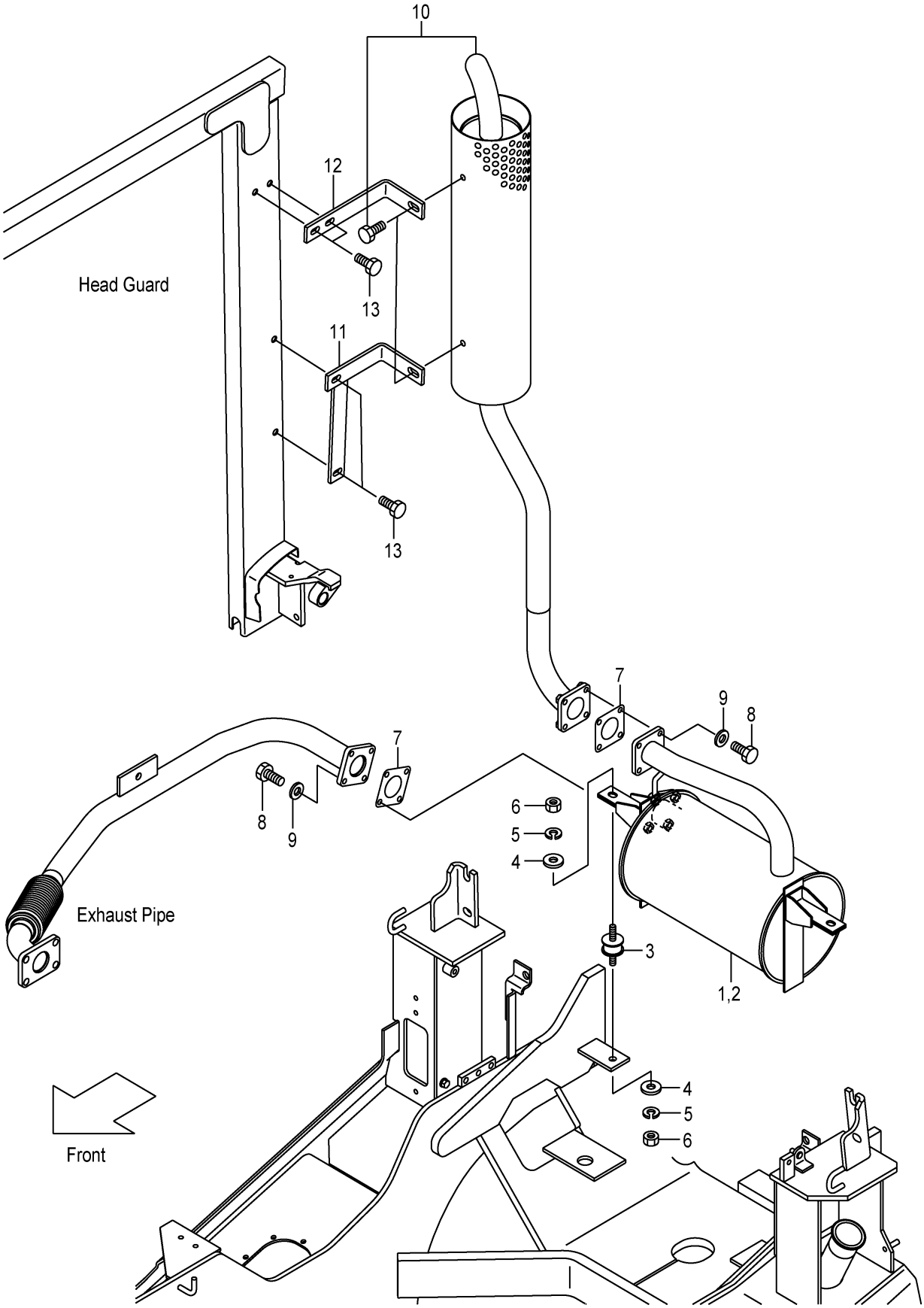

FIG.12

(F7Z22330)

A:FD20C3Z FD20T3Z FD25C3Z FD25T3Z

Item No	Part No.	Mark	Description		Req'd	Remarks : Serial No.
1	52N50-80201		MUFFLER	ﾏﾌﾗ	1	[TUE]
-	52N50-80211		MUFFLER	ﾏﾌﾗ	1	[EPM/TUE] INC.2
-	52N50-80221		MUFFLER	ﾏﾌﾗ	1	[CBM/TUE]
2	532A1-70201		CATALYST	ｷｬﾀﾘｽﾄ	1	[EPM/TUE]
3	539A0-82201		RUBBER	ﾗﾊﾞｰ	2	[TUE]
4	124T3-43041		PLATE	ﾌﾟﾚｰﾄ	4	[TUE]
5	02010-00008		WASHER	ﾜｯｼｬ	4	[TUE]
6	01400-00008		NUT	ﾅｯﾄ	4	[TUE]
7	217G2-32001		GASKET	ｶﾞｽｹｯﾄ	2	[TUE]
8	01181-08025		BOLT	ﾎﾞﾙﾄ	8	[TUE]
9	02000-00008		WASHER	ﾜｯｼｬ	8	[TUE]
10	52N50-80301		MUFFLER,VERTICAL	ﾏﾌﾗ	1	[TUE]
11	52N50-82501		BRACKET	ﾌﾞﾗｹｯﾄ	1	[TUE]
12	52N50-82511		BRACKET	ﾌﾞﾗｹｯﾄ	1	[TUE]
13	01185-08020		BOLT	ﾎﾞﾙﾄ	4	[TUE]

FIG.13 FRONT TUBE & JOINT

(F7Z22380) フロントチューブ&ジョイント

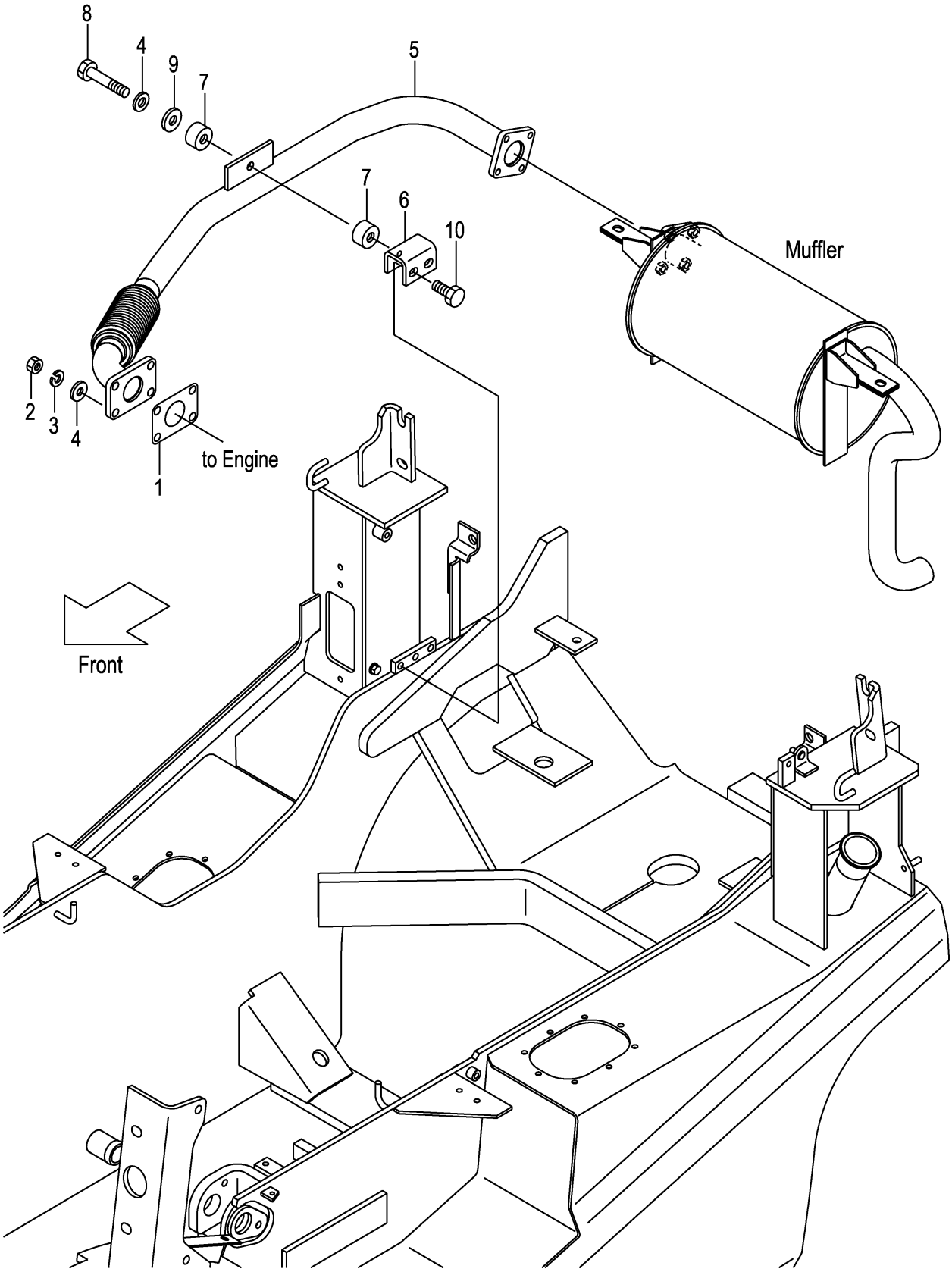

FIG.13

(F7Z22380)

A:FD20C3Z FD20T3Z FD25C3Z FD25T3Z

Item No	Part No.	Mark	Description		Req'd	Remarks : Serial No.
1	224G2-32011		GASKET	ｶﾞｽｹｯﾄ	1	
2	01400-20010		NUT	ﾅｯﾄ	4	
3	02010-00010		WASHER	ﾜｯｼｬ	4	
4	02000-00010		WASHER	ﾜｯｼｬ	5	
5	22U52-30111		PIPE,EXHAUST,C240	ﾊﾟｲﾌﾟ	1	
6	22N52-32021		BRACKET	ﾌﾞﾗｹｯﾄ	1	
7	22252-32241		RUBBER,CUSHION	ﾗﾊﾞｰ	2	
8	21232-32551		BOLT	ﾎﾞﾙﾄ	1	
9	23451-02011		WASHER	ﾜｯｼｬ	1	
10	01186-10020		BOLT	ﾎﾞﾙﾄ	2	

FIG.14 COMBINATION METER

(F7Z22410) ｺﾝﾋﾞﾈｰｼｮﾝﾒｰﾀ

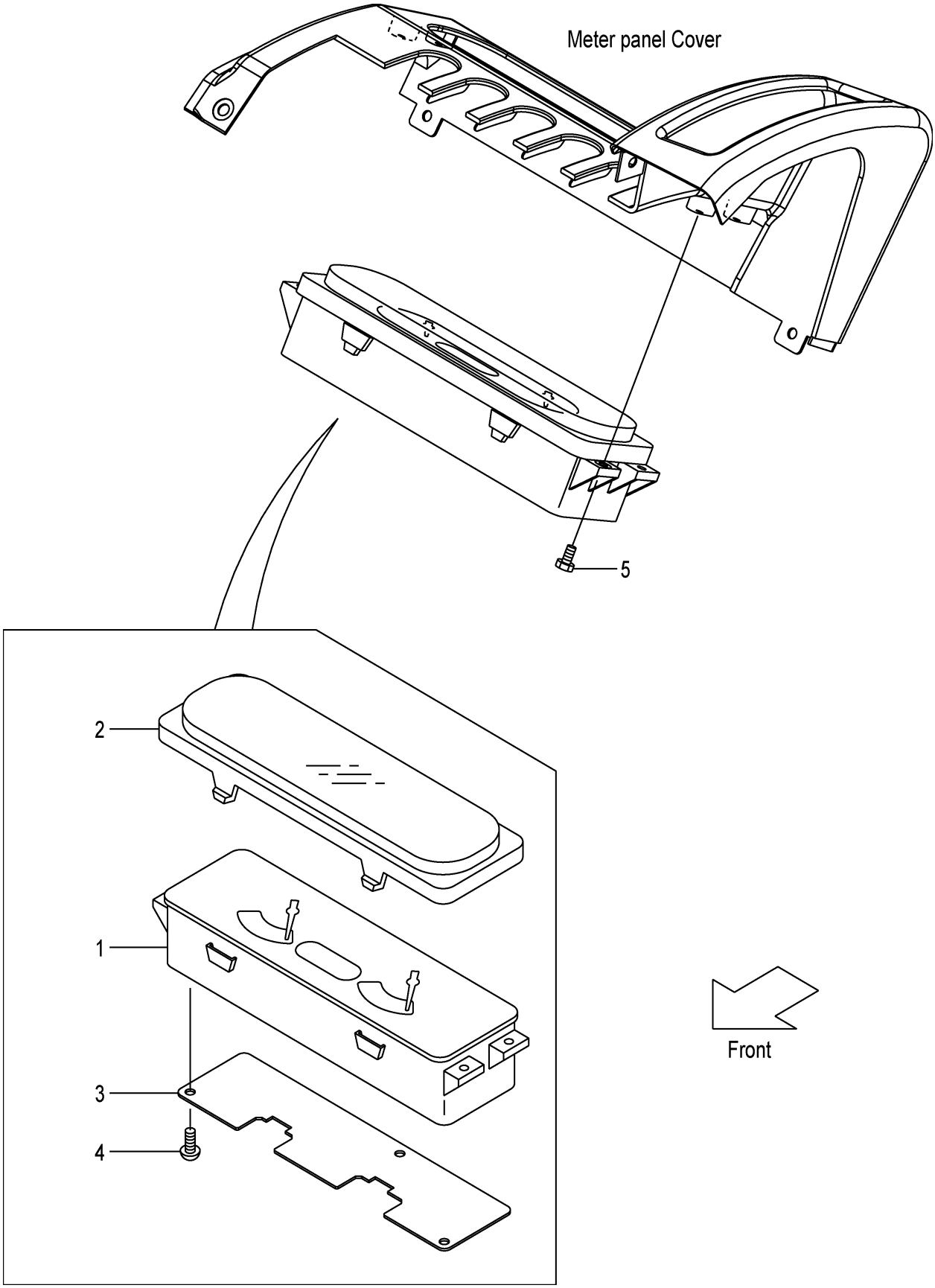

FIG.14

(F7Z22410)

A:FD20C3Z FD20T3Z FD25C3Z FD25T3Z

Item No	Part No.	Mark	Description	Req'd	Remarks : Serial No.
A1	22N52-40301		METER-ASSY,COMBINATION ｺﾝﾋﾞﾈｰｼｮﾝﾒｰﾀｱｯｾﾝ	1	INC.1-4
-	52N56-20101		METER-ASSY,COMBINATION ｺﾝﾋﾞﾈｰｼｮﾝﾒｰﾀｱｯｾﾝ	1	[OKM][SIL] INC.1-4
1	NO PART NO.	#	METER,COMBINATION ﾒｰﾀ	1	
-	NO PART NO.	#	METER,COMBINATION ﾒｰﾀ	1	[OKM][SIL]
2	22N52-42501		COVER ｶﾊﾞｰ	1	
3	22N52-42511		PLATE ﾌﾟﾚｰﾄ	1	
4	01043-03010		SCREW ｽｸﾘｭ	3	
5	01185-04012		BOLT ﾎﾞﾙﾄ	4	

FIG.15 FRONT GUARD WIRE HARNESS (CLUTCH)

(F7Z22420) フロントガードワイヤハーネス

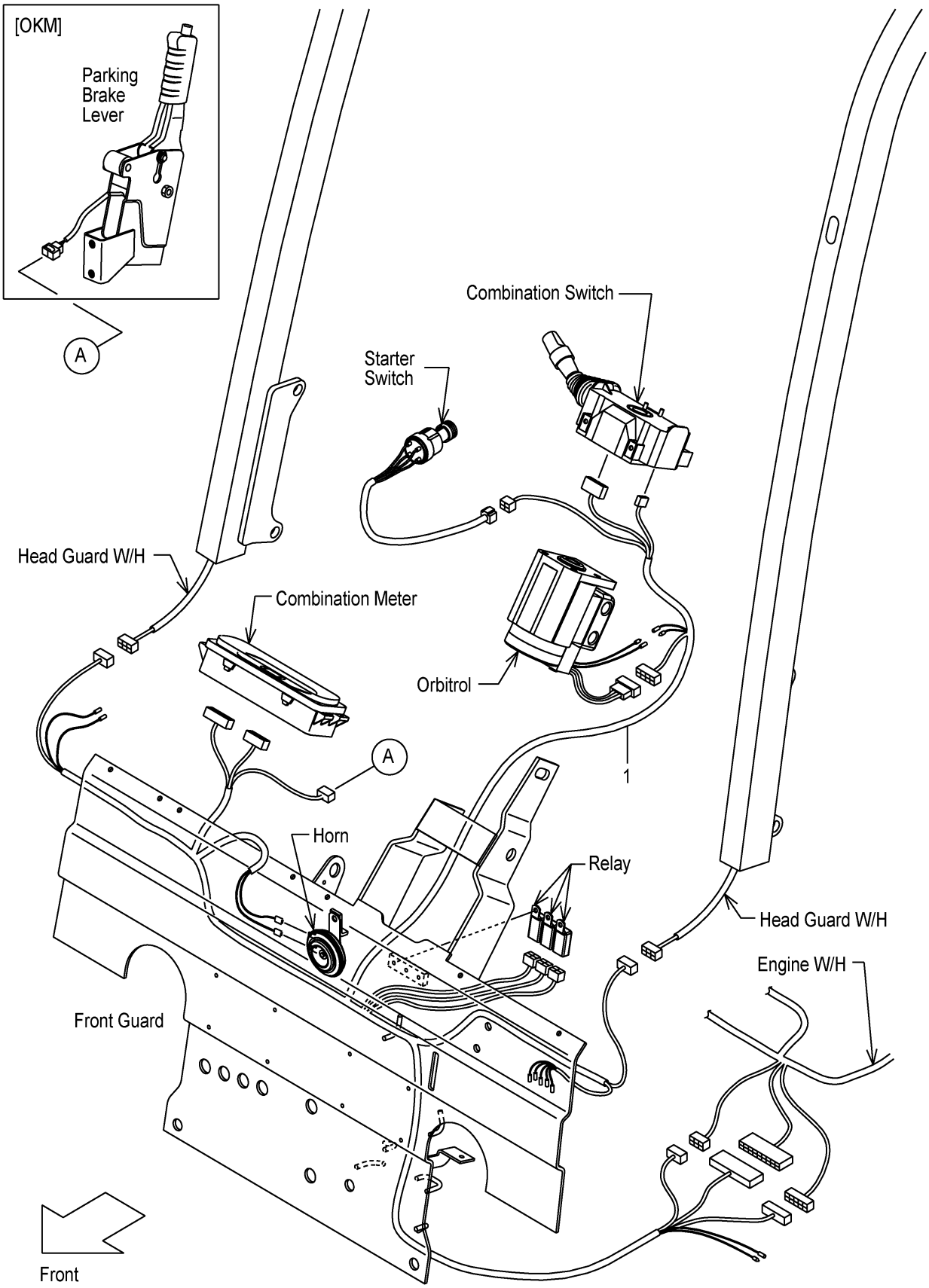

FIG.15

(F7Z22420)

A:FD20C3Z FD25C3Z

Item No	Part No.	Mark	Description	Req'd	Remarks : Serial No.
1	22N42-42201		WIRE-HARNESS,F.GUARD ﾜｲﾔﾊｰﾈｽ	1	
-	52N43-72101		WIRE-HARNESS,F.GUARD ﾜｲﾔﾊｰﾈｽ	1	[FC]

FIG.16 FRONT GUARD WIRE HARNESS (TOR-CON)

(F7Z22430) フロントガードワイヤハーネス

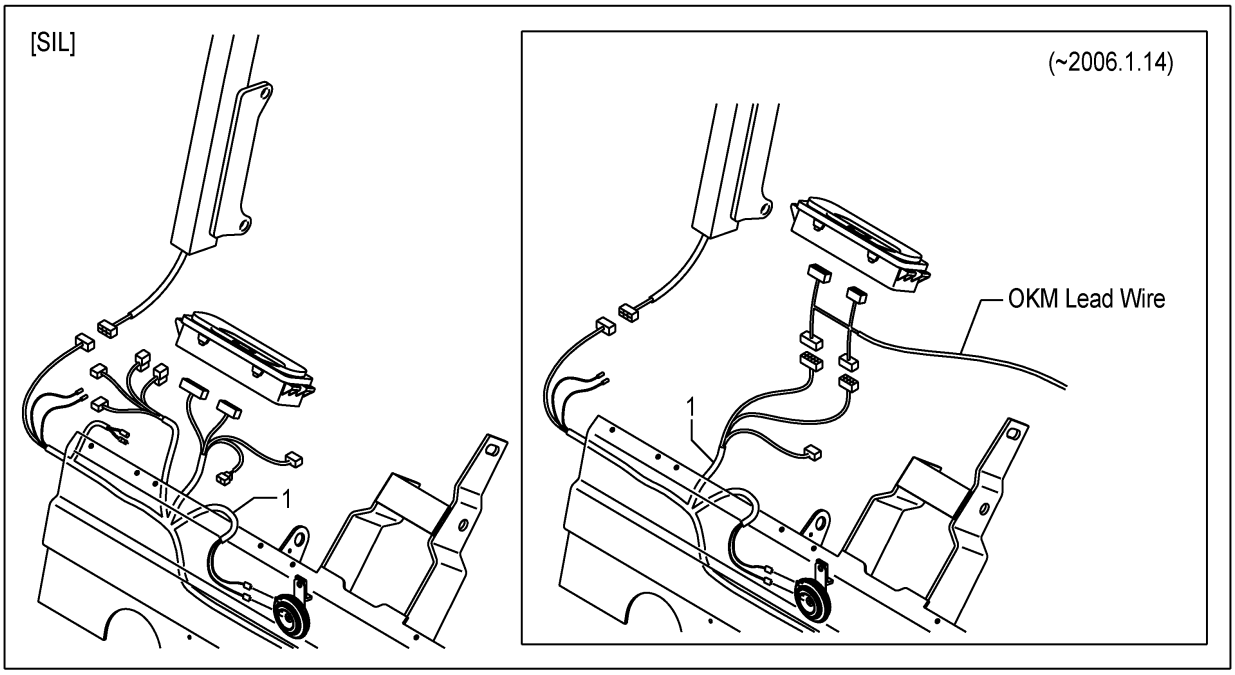

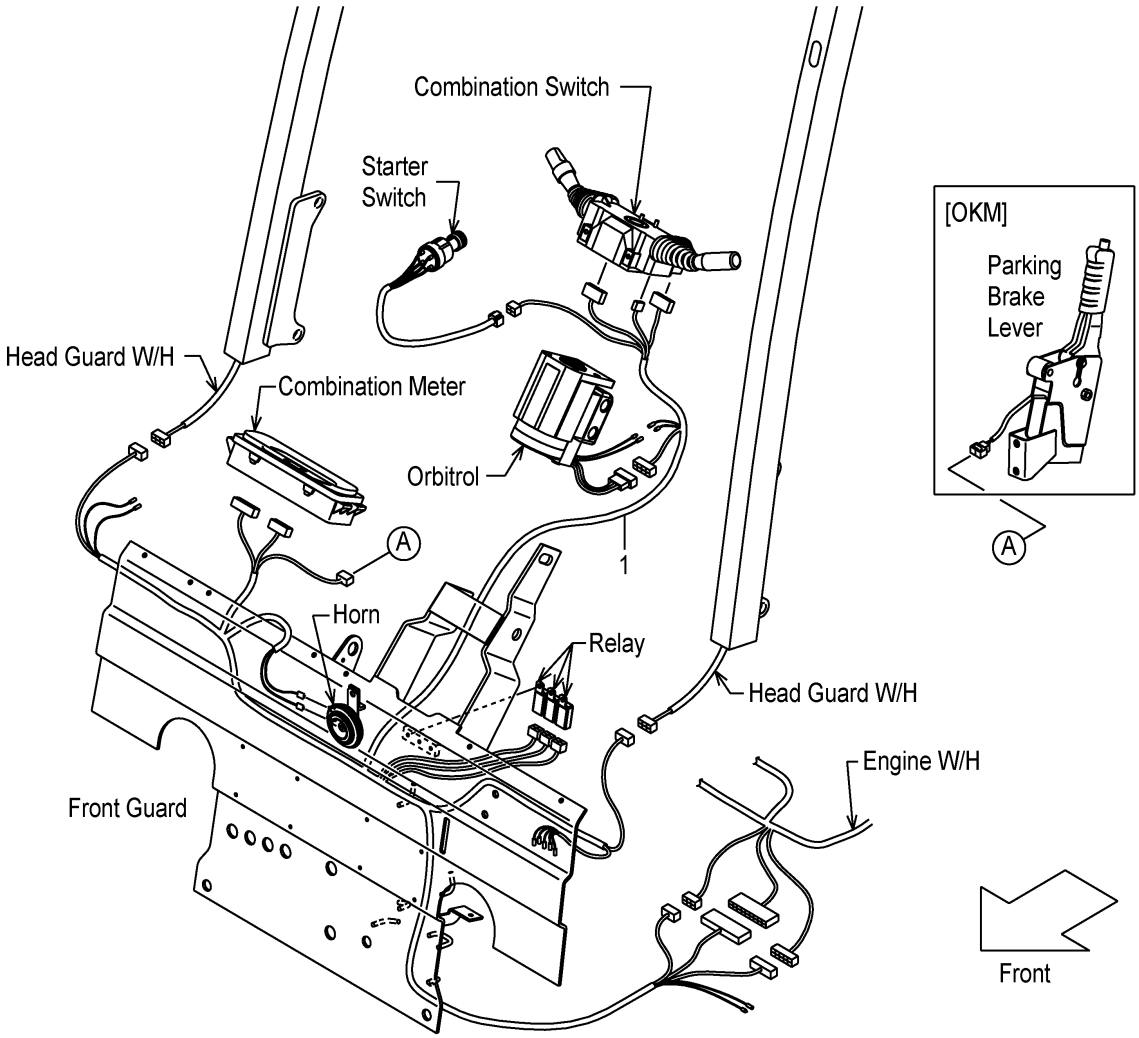

FIG.16

(F7Z22430)

A:FD20T3Z FD25T3Z

Item No	Part No.	Mark	Description	Req'd	Remarks : Serial No.
1	22N52-42201		WIRE-HARNESS,F.GUARD ﾜｲﾔﾊｰﾈｽ	1	
-	52N53-72101		WIRE-HARNESS,F.GUARD ﾜｲﾔﾊｰﾈｽ	1	[FC]
-	52N52-32001		WIRE-HARNESS,F.GUARD ﾜｲﾔﾊｰﾈｽ	1	[LCR]
-	52N53-82002		WIRE-HARNESS,F.GUARD ﾜｲﾔﾊｰﾈｽ	1	[SIL](2006.1.15-)
-	52N53-72301		WIRE-HARNESS,F.GUARD ﾜｲﾔﾊｰﾈｽ	1	[FC/LCR]
-	52N53-72402		WIRE-HARNESS,F.GUARD ﾜｲﾔﾊｰﾈｽ	1	[FC/SIL](2006.1.15-)
-	52N52-32402		WIRE-HARNESS,F.GUARD ﾜｲﾔﾊｰﾈｽ	1	[LCR/SIL](2006.1.15-)
-	52N52-32502		WIRE-HARNESS,F.GUARD ﾜｲﾔﾊｰﾈｽ	1	[FC/LCR/SIL](2006.1.15-)

FIG.17 COMBINATION SWITCH (CLUTCH)

(F7Z22440) コンビネーションスイッチ

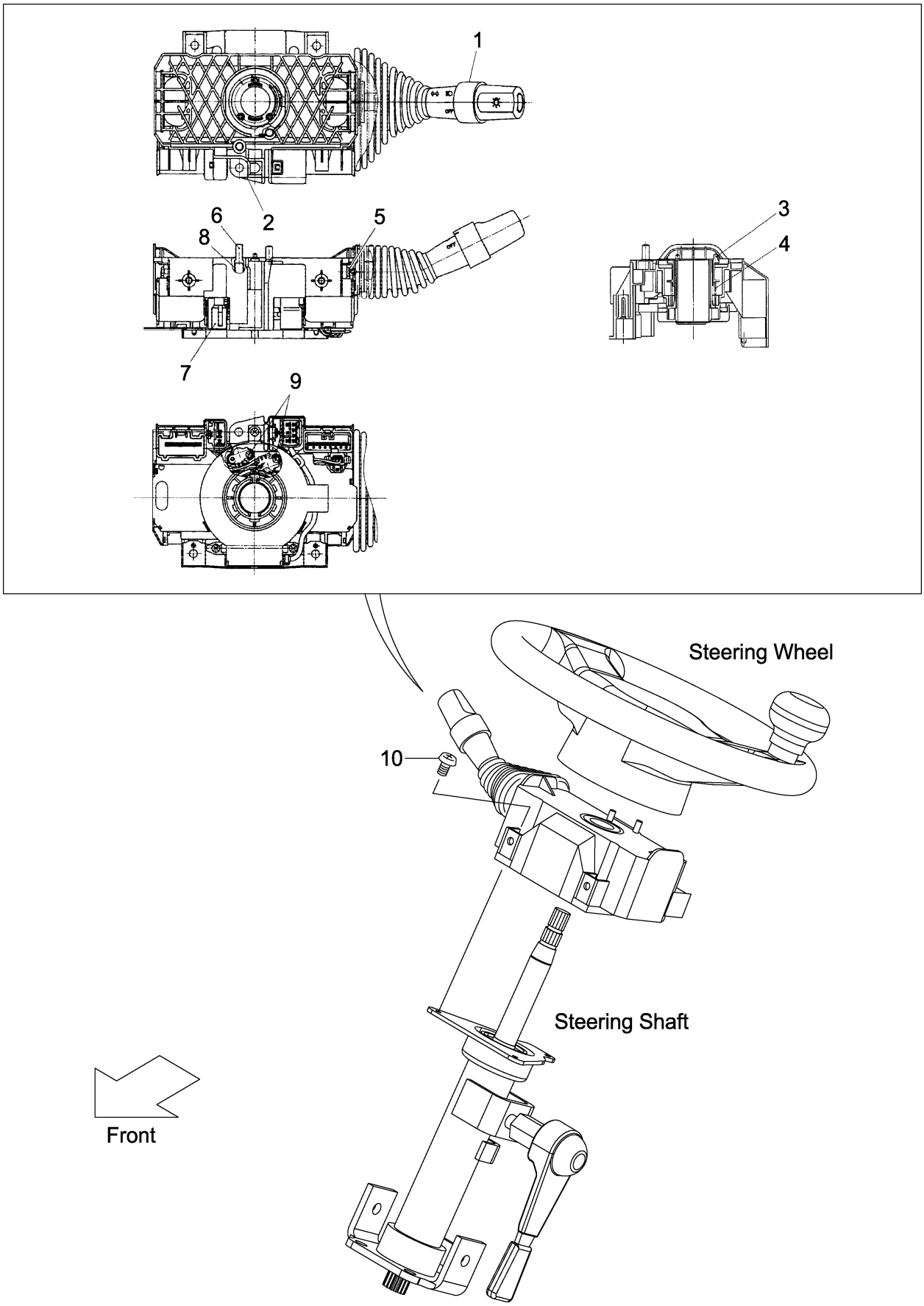

FIG.17

(F7Z22440)

A:FD20C3Z FD25C3Z

Item No	Part No.	Mark	Description	Req'd	Remarks : Serial No.
A1	239A2-40501		SWITCH-ASSY,COMBINATION ｺﾝﾋﾞﾈｰｼｮﾝｽｲｯﾁｱｯｾﾝ	1	INC.1-9
1	280C2-42331		SWITCH,TURN-SIGNAL ｽｲｯﾁ	1	
2	NO PART NO.	#	BODY ﾎﾞﾃﾞｨ	1	
3	NO PART NO.	#	CAM,CANCEL,RH ｶﾑ	1	
4	NO PART NO.	#	SPRING ｽﾌﾟﾘﾝｸﾞ	1	
5	NO PART NO.	#	SCREW ｽｸﾘｭ	4	
6	280C2-42351		CONTACT,HORN ｺﾝﾀｸﾄ	2	
7	NO PART NO.	#	CODE,CP-HORN ｺｰﾄﾞ	1	
8	NO PART NO.	#	SPRING ｽﾌﾟﾘﾝｸﾞ	2	
9	NO PART NO.	#	SCREW ｽｸﾘｭ	2	
10	01033-05014		SCREW ｽｸﾘｭ	3	

FIG.18 COMBINATION SWITCH (TOR-CON)

(F7Z22450) コンビネーションスイッチ

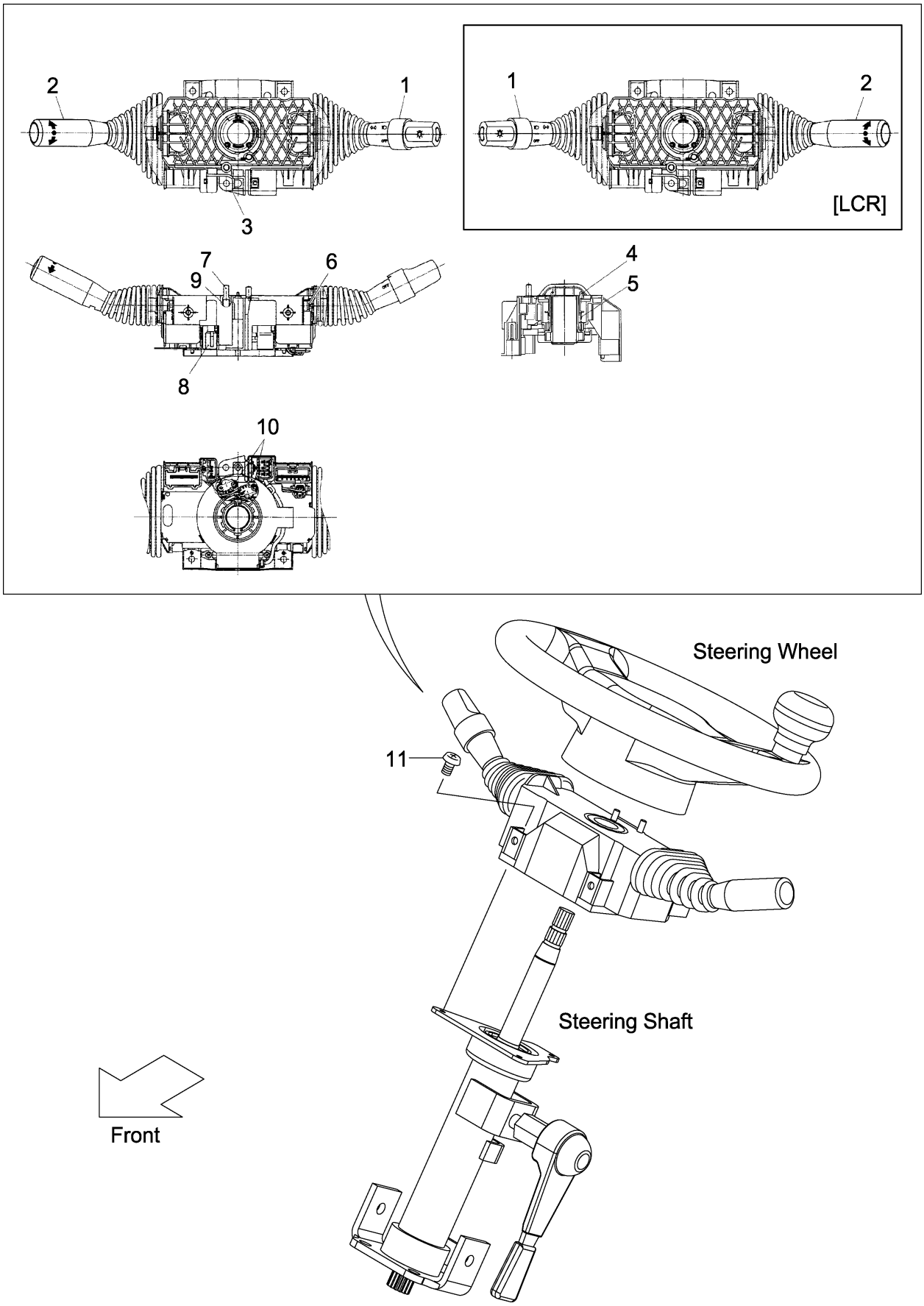

FIG.18

(F7Z22450)

A:FD20T3Z FD25T3Z

Item No	Part No.	Mark	Description	Req'd	Remarks : Serial No.
A1	209K2-40501		SWITCH-ASSY,COMBINATION ｺﾝﾋﾞﾈｰｼｮﾝｽｲｯﾁｱｯｾﾝ	1	INC.1-10
-	509K2-30101		SWITCH-ASSY,COMBINATION ｺﾝﾋﾞﾈｰｼｮﾝｽｲｯﾁｱｯｾﾝ	1	[LCR] INC.1-10
1	280C2-42331		SWITCH,TURN-SIGNAL ｽｲｯﾁ	1	
-	280C2-42301		SWITCH,TURN-SIGNAL ｽｲｯﾁ	1	[LCR]
2	280C2-42341		SWITCH,DIRECTION ｽｲｯﾁ	1	
-	280C2-42311		SWITCH,DIRECTION ｽｲｯﾁ	1	[LCR]
3	NO PART NO.	#	BODY ﾎﾞﾃﾞｨ	1	
4	NO PART NO.	#	CAM,CANCEL,RH ｶﾑ	1	
-	NO PART NO.	#	CAM,CANCEL,RH ｶﾑ	1	[LCR]
5	NO PART NO.	#	SPRING ｽﾌﾟﾘﾝｸﾞ	1	
6	NO PART NO.	#	SCREW ｽｸﾘｭ	4	
7	280C2-42351		CONTACT,HORN ｺﾝﾀｸﾄ	2	
8	NO PART NO.	#	CODE,CP-HORN ｺｰﾄﾞ	1	
9	NO PART NO.	#	SPRING ｽﾌﾟﾘﾝｸﾞ	2	
10	NO PART NO.	#	SCREW ｽｸﾘｭ	2	
11	01033-05014		SCREW ｽｸﾘｭ	3	

FIG.19 ELECTRIC PARTS (CLUTCH)

(F7Z22480) エレクトリックパーツ

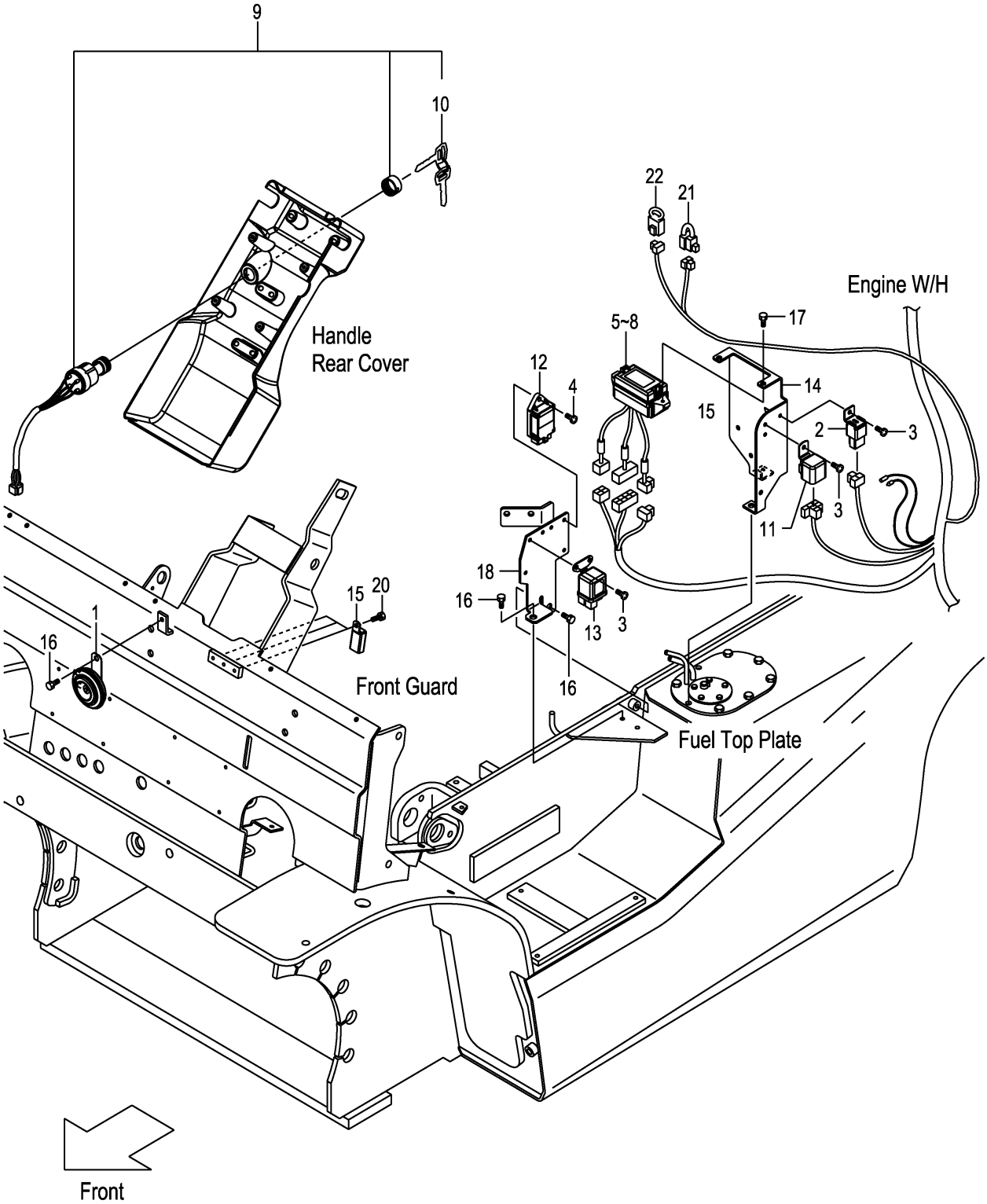

FIG.19

(F7Z22480)

A:FD20C3Z FD25C3Z

Item No	Part No.	Mark	Description		Req'd	Remarks : Serial No.
1	216G2-43651		HORN	ﾎｰﾝ	1	
2	216G2-43711		UNIT,FLASHER	ﾕﾆｯﾄ	1	
3	214A2-42611		SCREW	ｽｸﾘｭ	4	
4	214A2-42621		SCREW	ｽｸﾘｭ	1	
5	22N52-42101		BOX,FUSE	ﾎﾞｯｸｽ	1	INC.6-8
6	22N52-42311		FUSE,3A	ﾋｭｰｽﾞ	5	
7	22N52-42321		FUSE,7.5A	ﾋｭｰｽﾞ	5	
8	22N52-42331		FUSE,15A	ﾋｭｰｽﾞ	3	
9	216G2-42311		SWITCH,STARTER	ｽｲｯﾁ	1	INC.10
10	216G2-43401		KEY,SPARE,511323	ｷｰ	1	(1SET=2PCS)
-	216G2-43411		KEY,SPARE,512421	ｷｰ	(1)	(1SET=2PCS)
-	216G2-43421		KEY,SPARE,513454	ｷｰ	(1)	(1SET=2PCS)
11	217G2-42301		RELAY,STARTER	ﾘﾚｰ	1	
12	239A2-42311		TIMER,QOS-3	ﾀｲﾏ	1	
13	239A2-42301		RELAY,GLOW-PLUG	ﾘﾚｰ	1	
14	22N52-42021		BRACKET,ELECTRIC	ﾌﾞﾗｹｯﾄ	1	
15	209K2-42351		RELAY,1A	ﾘﾚｰ	3	
16	01185-08016		BOLT	ﾎﾞﾙﾄ	3	
17	01185-06016		BOLT	ﾎﾞﾙﾄ	2	
18	22N52-42031		BRACKET,ELECTRIC	ﾌﾞﾗｹｯﾄ	1	
19	04913-10200	+	BAND	ﾊﾞﾝﾄﾞ	4	
20	01183-06010		BOLT	ﾎﾞﾙﾄ	3	
21	22N52-43001		RESISTOR	ﾚｼﾞｽﾀ	1	
22	21152-42091		DIODE	ﾀﾞｲｵｰﾄﾞ	1	

FIG.20 ELECTRIC PARTS (TOR-CON)

(F7Z22490) エレクトリックパーツ

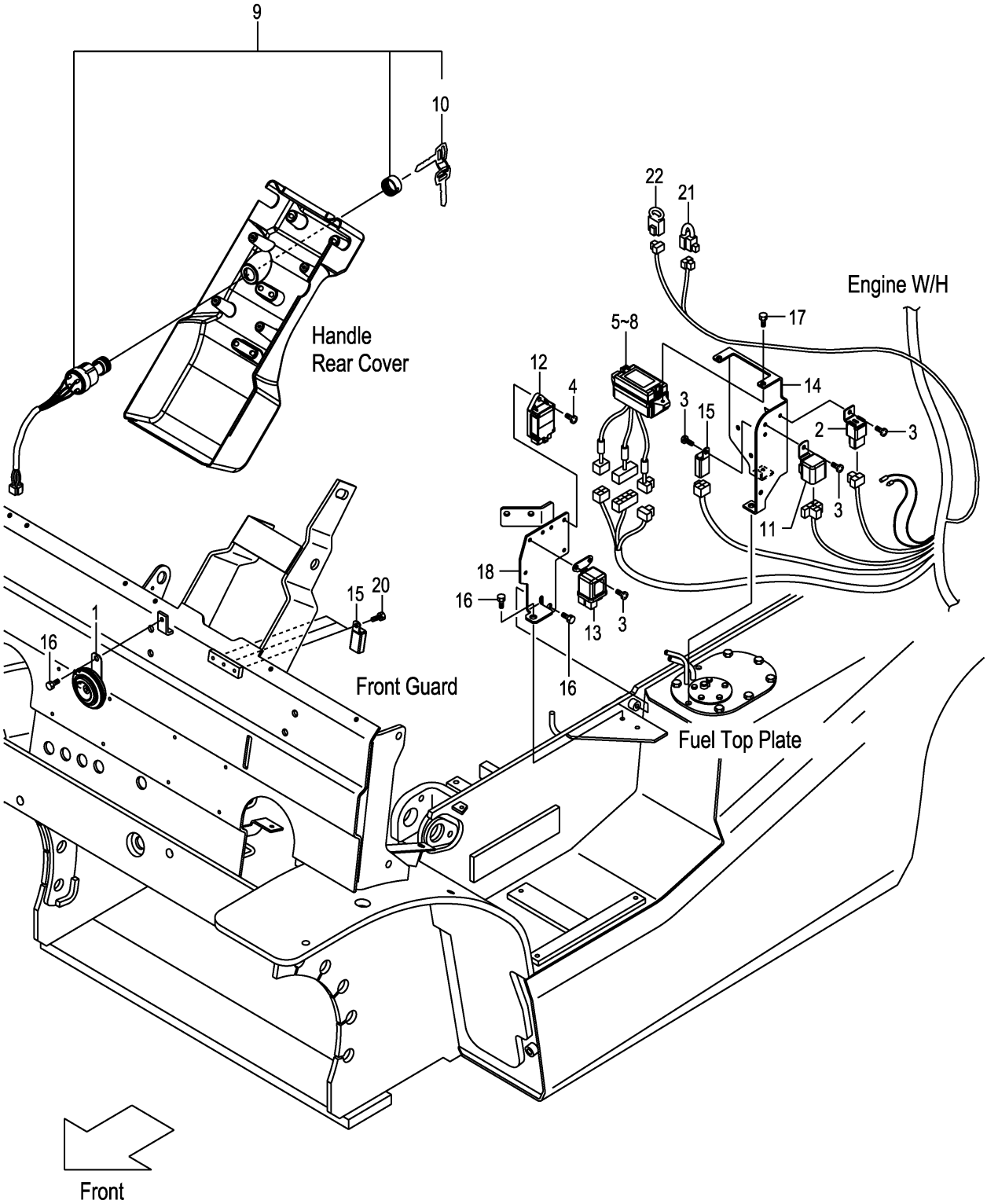

A:FD20T3Z FD25T3Z

Item No	Part No.	Mark	Description		Req'd	Remarks : Serial No.
1	216G2-43651		HORN	ﾎｰﾝ	1	
2	216G2-43711		UNIT,FLASHER	ﾕﾆｯﾄ	1	
3	214A2-42611		SCREW	ｽｸﾘｭ	5	
4	214A2-42621		SCREW	ｽｸﾘｭ	1	
5	22N52-42101		BOX,FUSE	ﾎﾞｯｸｽ	1	INC.6-8
6	22N52-42311		FUSE,3A	ﾋｭｰｽﾞ	5	
7	22N52-42321		FUSE,7.5A	ﾋｭｰｽﾞ	5	
8	22N52-42331		FUSE,15A	ﾋｭｰｽﾞ	3	
9	216G2-42311		SWITCH,STARTER	ｽｲｯﾁ	1	INC.10
10	216G2-43401		KEY,SPARE,511323	ｷｰ	1	(1SET=2PCS)
-	216G2-43411		KEY,SPARE,512421	ｷｰ	(1)	(1SET=2PCS)
-	216G2-43421		KEY,SPARE,513454	ｷｰ	(1)	(1SET=2PCS)
11	217G2-42301		RELAY,STARTER	ﾘﾚｰ	1	
12	239A2-42311		TIMER,QOS-3	ﾀｲﾏ	1	
13	239A2-42301		RELAY,GLOW-PLUG	ﾘﾚｰ	1	
14	22N52-42021		BRACKET,ELECTRIC	ﾌﾞﾗｹｯﾄ	1	
15	209K2-42351		RELAY,1A	ﾘﾚｰ	4	
16	01185-08016		BOLT	ﾎﾞﾙﾄ	3	
17	01185-06016		BOLT	ﾎﾞﾙﾄ	2	
18	22N52-42031		BRACKET,ELECTRIC	ﾌﾞﾗｹｯﾄ	1	
19	04913-10200	+	BAND	ﾊﾞﾝﾄﾞ	4	
20	01183-06010		BOLT	ﾎﾞﾙﾄ	3	
21	22N52-43001		RESISTOR	ﾚｼﾞｽﾀ	1	
22	21152-42091		DIODE	ﾀﾞｲｵｰﾄﾞ	1	

FIG.21 ENGINE WIRE HARNESS (CLUTCH)

(F7Z224C0) エンジンワイヤハーネス

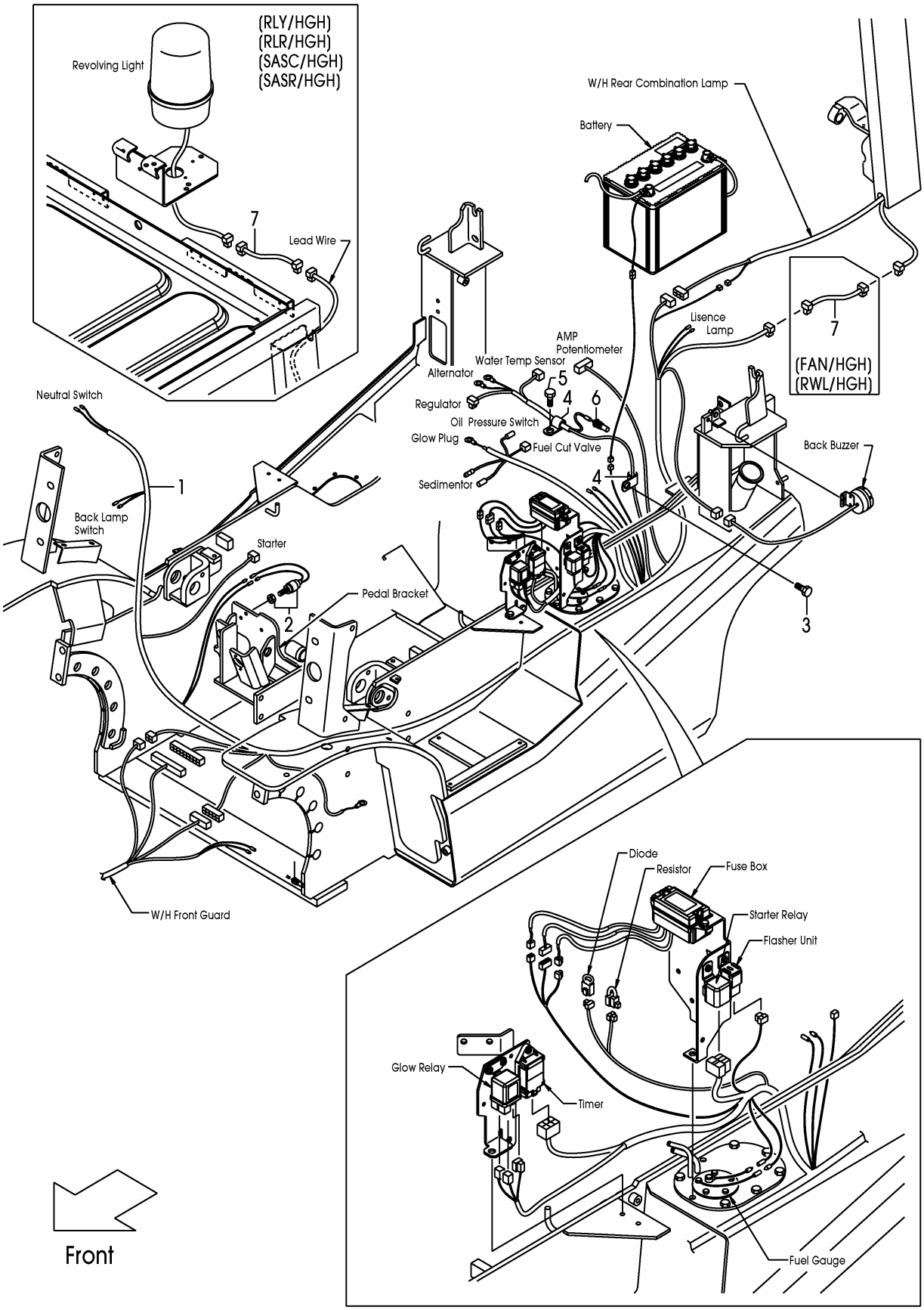

FIG.21

(F7Z224C0)

A:FD20C3Z FD25C3Z

Item No	Part No.	Mark	Description		Req'd	Remarks : Serial No.
1	22U42-42211		WIRE-HARNESS,ENGINE	ﾜｲﾔﾊｰﾈｽ	1	
-	52U43-72001		WIRE-HARNESS,ENGINE	ﾜｲﾔﾊｰﾈｽ	1	[FC]
2	23232-42072		SWITCH,STOP-LAMP	ｽｲｯﾁ	1	
3	01183-06016		BOLT	ﾎﾞﾙﾄ	1	113-
4	214A2-42331		CLIP	ｸﾘｯﾌﾟ	2	113-
5	01183-08016		BOLT	ﾎﾞﾙﾄ	1	113-
6	23652-44001		UNIT,SENDING	ﾕﾆｯﾄ	1	
7	52N58-92401		WIRE,LEAD	ﾜｲﾔ	1	[FAN/HGH][RLY/HGH][RLR/HGH]
-	52N58-92401		WIRE,LEAD	ﾜｲﾔ	1	[RWL/HGH][SASC/HGH][SASR/HGH]

FIG.22 ENGINE WIRE HARNESS (TOR-CON)

(F7Z224D0) エンジンワイヤハーネス

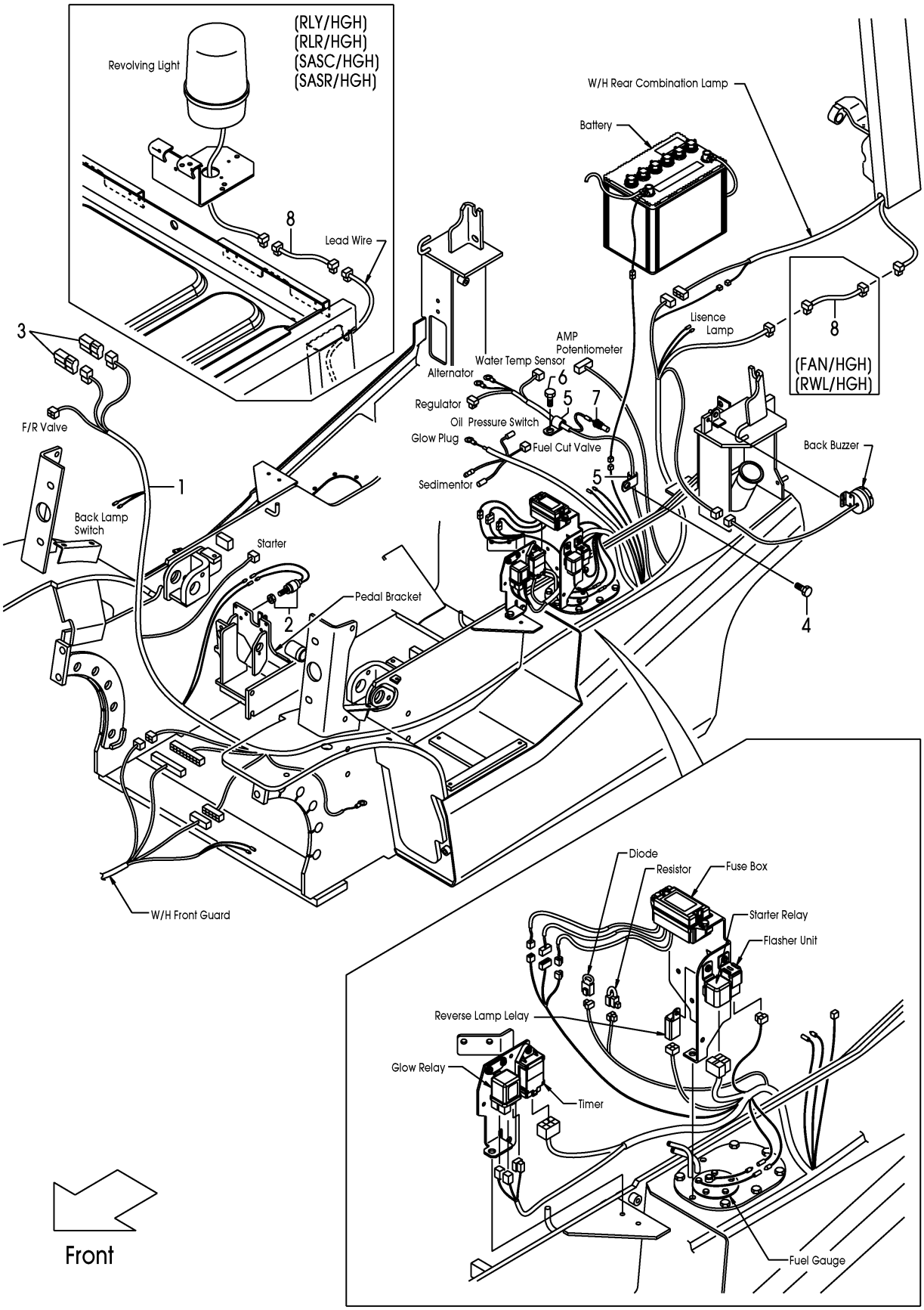

FIG.22

(F7Z224D0)

A:FD20T3Z FD25T3Z

Item No	Part No.	Mark	Description		Req'd	Remarks : Serial No.
1	22U52-42211		WIRE-HARNESS,ENGINE	ﾜｲﾔﾊｰﾈｽ	1	
-	52U53-72001		WIRE-HARNESS,ENGINE	ﾜｲﾔﾊｰﾈｽ	1	[FC]
2	23232-42072		SWITCH,STOP-LAMP	ｽｲｯﾁ	1	
3	230C2-42201		DIODE,3A	ﾀﾞｲｵｰﾄﾞ	2	
4	01183-06016		BOLT	ﾎﾞﾙﾄ	1	113-
5	214A2-42331		CLIP	ｸﾘｯﾌﾟ	2	113-
6	01183-08016		BOLT	ﾎﾞﾙﾄ	1	113-
7	23652-44001		UNIT,SENDING	ﾕﾆｯﾄ	1	
8	52N58-92401		WIRE,LEAD	ﾜｲﾔ	1	[FAN/HGH][RLY/HGH][RLR/HGH]
-	52N58-92401		WIRE,LEAD	ﾜｲﾔ	1	[RWL/HGH][SASC/HGH][SASR/HGH]

FIG.23 BATTERY

(F7Z224F0) ﾊﾞｯﾃﾘ

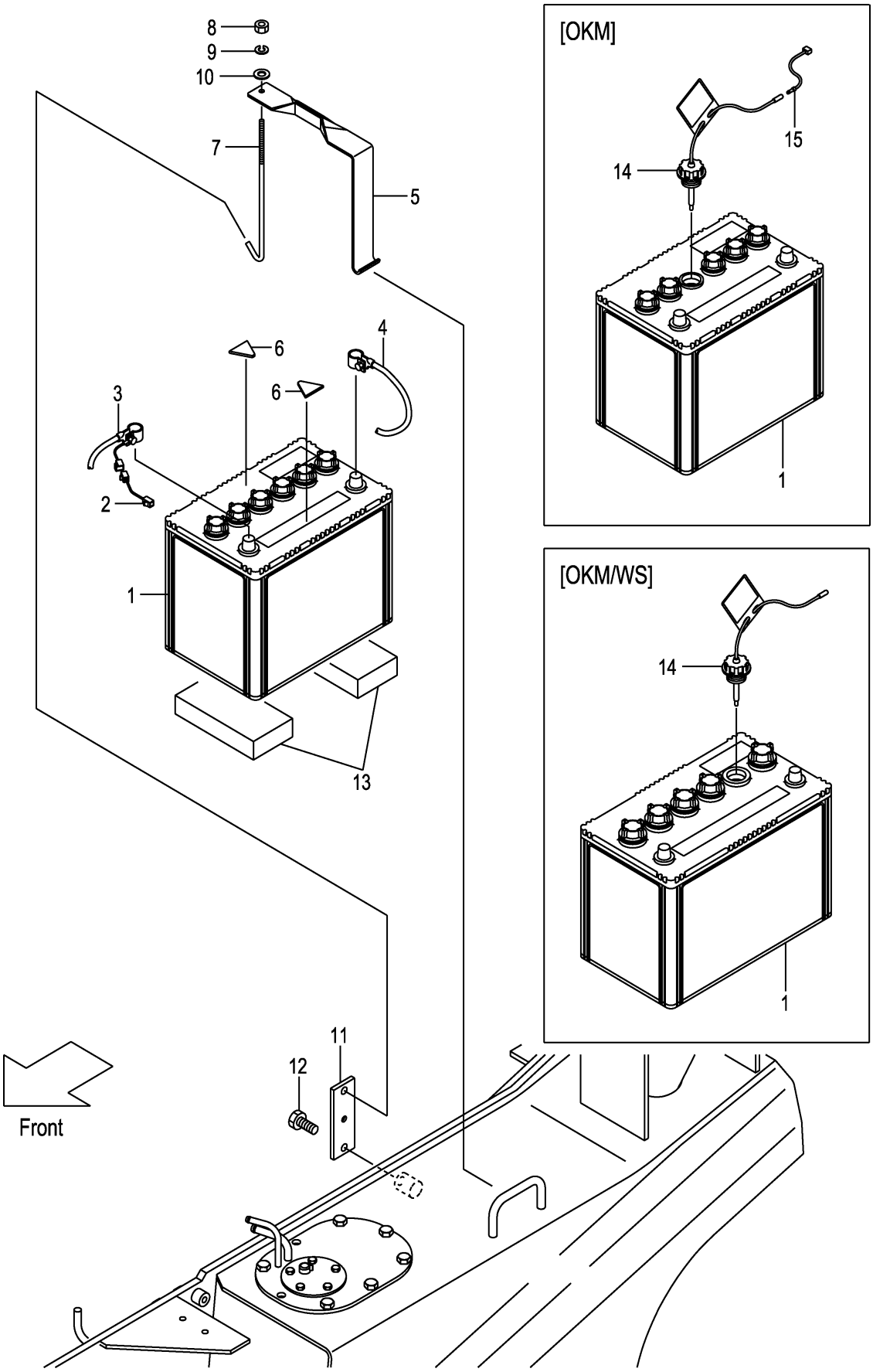

FIG.23

(F7Z224F0)

A:FD20C3Z FD20T3Z FD25C3Z FD25T3Z

Item No	Part No.	Mark	Description		Req'd	Remarks : Serial No.
1	58106-31011		BATTERY,WET,80D26R	ﾊﾞｯﾃﾘ	1	
-	534A7-02001		BATTERY,WET,115D31R	ﾊﾞｯﾃﾘ	1	[WS]
2	25592-42081		WIRE,FUSIBLE-LINK	ﾜｲﾔ	1	
3	22U52-42151		CABLE,BATTERY(+)	ｹｰﾌﾞﾙ	1	
4	238A2-42151		CABLE,BATTERY(-)	ｹｰﾌﾞﾙ	1	
5	217G2-42021		HOLDER,BATTERY	ﾎﾙﾀﾞ	1	
6	216G2-43111		RUBBER	ﾗﾊﾞｰ	2	
7	256C2-42231		BOLT,ANCHOR	ﾎﾞﾙﾄ	1	
8	01420-00006		NUT	ﾅｯﾄ	1	(-2005.7.4)
-	01400-00006		NUT	ﾅｯﾄ	1	(2005.7.5-)
9	02010-00006		WASHER	ﾜｯｼｬ	1	
10	23452-42181		WASHER	ﾜｯｼｬ	1	(-2005.7.4)
-	02000-00006		WASHER	ﾜｯｼｬ	1	(2005.7.5-)
11	22N52-42111		HOOK,ANCHOR-BOLT	ﾌｯｸ	1	
12	01185-08016		BOLT	ﾎﾞﾙﾄ	1	
13	22N52-42301		RUBBER	ﾗﾊﾞｰ	2	
14	521A2-42001		CAP,BATTERY	ｷｬｯﾌﾟ	1	[OKM]
-	522A2-42001		CAP,BATTERY	ｷｬｯﾌﾟ	1	[OKM/WS]
15	539A6-22021		WIRE,LEAD	ﾜｲﾔ	1	[OKM](WITHOUT OKM/WS)

FIG.24 HEAD LAMP & FRONT COMBINATION LAMP

(F7Z224G0) ﾍｯﾄﾞﾗﾝﾌﾟ&ﾌﾛﾝﾄｺﾝﾋﾞﾈｰｼｮﾝﾗﾝﾌﾟ

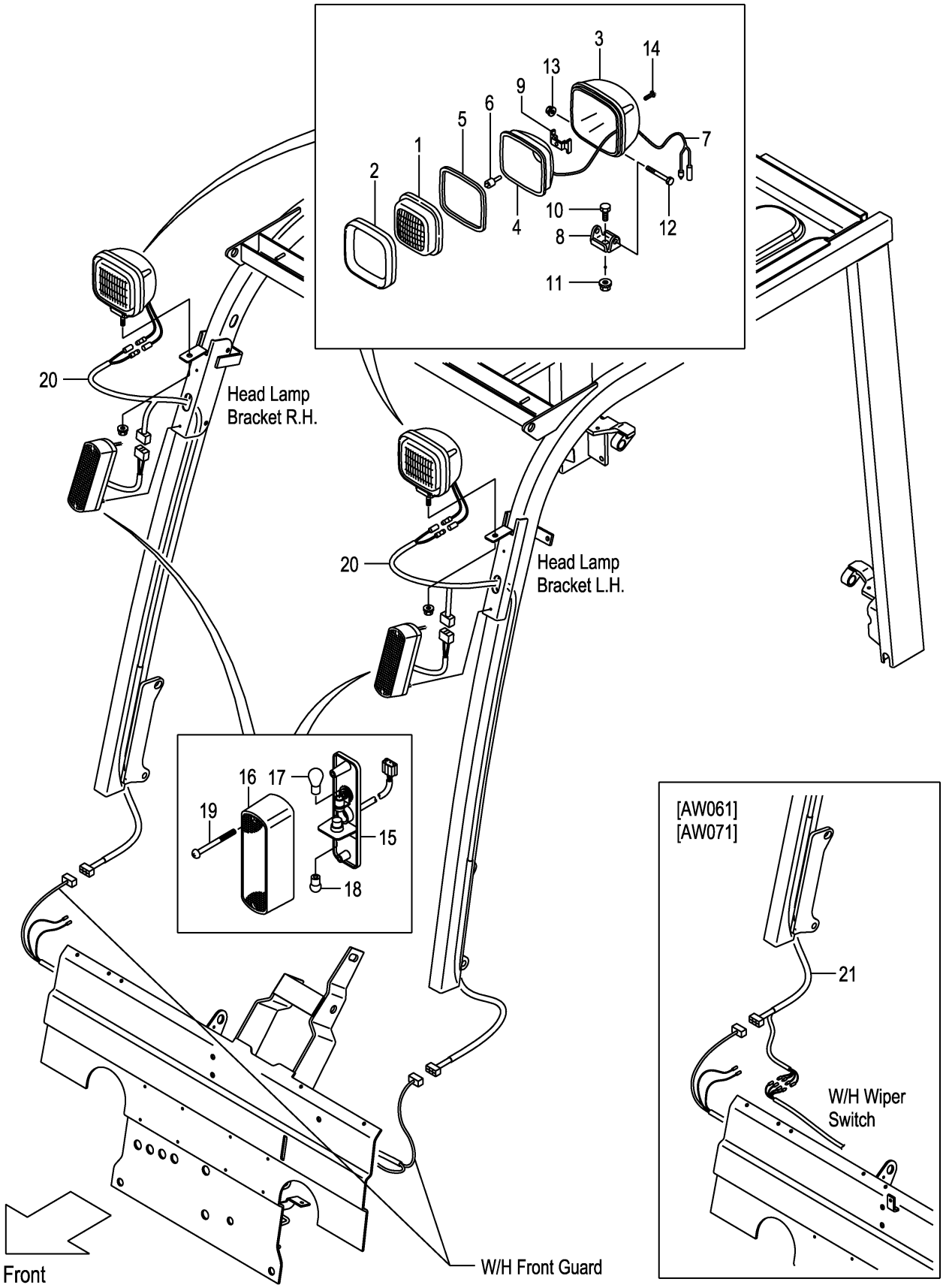

FIG.24
(F7Z224G0)

A:FD20C3Z FD20T3Z FD25C3Z FD25T3Z

Item No	Part No.	Mark	Description		Req'd	Remarks : Serial No.
A1	216G2-40602		LAMP-ASSY,HEAD	ﾍｯﾄﾞﾗﾝﾌﾟｱｯｾﾝ	2	INC.1-14
1	216G2-43502		LENS	ﾚﾝｽﾞ	2	
2	216G2-43631		RIM	ﾘﾑ	2	
3	NO PART NO.	#	HOUSING	ﾊｳｼﾞﾝｸﾞ	2	
4	NO PART NO.	#	REFLECTOR	ﾘﾌﾚｸﾀ	2	
5	216G2-43531		GASKET	ｶﾞｽｹｯﾄ	2	
6	216G2-43542		BULB,12V/55W	ﾊﾞﾙﾌﾞ	2	
7	216G2-43551		WIRE,LEAD	ﾜｲﾔ	2	
8	216G2-43562		BRACKET	ﾌﾞﾗｹｯﾄ	2	
9	216G2-43571		SPRING	ｽﾌﾟﾘﾝｸﾞ	2	
10	216G2-43582		BOLT	ﾎﾞﾙﾄ	2	
11	216G2-43592		NUT	ﾅｯﾄ	2	
12	216G2-43602		BOLT	ﾎﾞﾙﾄ	2	
13	216G2-43611		NUT	ﾅｯﾄ	2	
14	216G2-43622		SCREW	ｽｸﾘｭ	8	
A2	216G2-40701		LAMP-ASSY,F-COMBINATION	ﾌﾛﾝﾄｺﾝﾋﾞﾈｰｼｮﾝﾗﾝﾌﾟｱｯｾﾝ	2	INC.15-19
15	NO PART NO.	#	BODY	ﾎﾞﾃﾞｨ	2	
16	216G2-40731		LENS	ﾚﾝｽﾞ	2	
17	216G2-40711		BULB,12V/27W	ﾊﾞﾙﾌﾞ	2	
18	216G2-40721		BULB,12V/10W	ﾊﾞﾙﾌﾞ	2	
19	NO PART NO.		SCREW	ｽｸﾘｭ	4	
20	239A2-42221		WIRE-HARNESS,H.GUARD	ﾜｲﾔﾊｰﾈｽ	2	
-	534A9-22211		WIRE-HARNESS,H.GUARD	ﾜｲﾔﾊｰﾈｽ	2	[HL][BKH]
-	239A2-42221		WIRE-HARNESS,H.GUARD	ﾜｲﾔﾊｰﾈｽ	1	[AW061][AW071]
21	52N55-42301		WIRE-HARNESS,H.GUARD	ﾜｲﾔﾊｰﾈｽ	1	[AW061][AW071](-2005.7)
-	52N55-42302		WIRE-HARNESS,H.GUARD	ﾜｲﾔﾊｰﾈｽ	1	[AW061][AW071](2005.8-)

FIG.25 REAR COMBINATION LAMP

(F7Z224H0) ﾘﾔｰｺﾝﾋﾞﾈｰｼｮﾝﾗﾝﾌﾟ

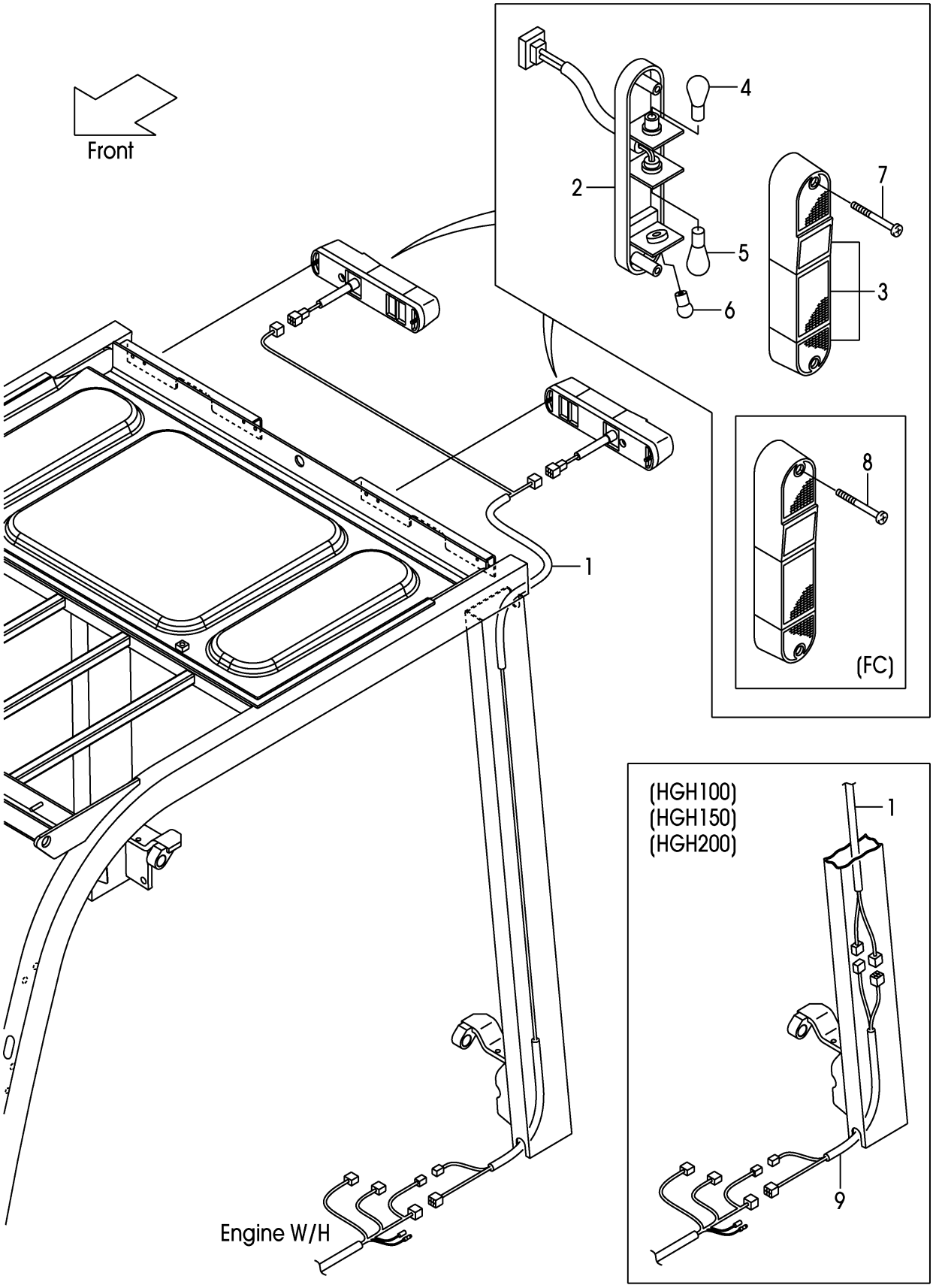

FIG.25

(F7Z224H0)

A:FD20C3Z FD20T3Z FD25C3Z FD25T3Z

Item No	Part No.	Mark	Description		Req'd	Remarks : Serial No.
1	22N52-42251		WIRE-HARNESS,R-COMBINATION	ﾜｲﾔﾊｰﾈｽ	1	
A1	209K2-42002		LAMP-ASSY,R-COMBINATION	ﾘﾔｰｺﾝﾋﾞﾈｰｼｮﾝﾗﾝﾌﾟｱｯｾﾝ	2	INC.2-7
2	NO PART NO.	#	BODY	ﾎﾞﾃﾞｨ	2	
3	209K2-42021		LENS,PLASTIC	ﾚﾝｽﾞ	2	
4	214A2-44501		BULB,12V/23,8W	ﾊﾞﾙﾌﾞ	2	
5	209K2-42041		BULB,12V/27W	ﾊﾞﾙﾌﾞ	2	
6	210F2-42031		BULB,12V/10W	ﾊﾞﾙﾌﾞ	2	
7	01030-05055		SCREW	ｽｸﾘｭ	4	(WITHOUT FC)
8	514A3-72091		BOLT,PAN-HEAD	ﾎﾞﾙﾄ	4	[FC]
9	52N55-02451		WIRE-HARNESS,JOINT	ﾜｲﾔﾊｰﾈｽ	1	[HGH100][HGH150][HGH200]

FIG.26 LICENSE LAMP [LP]

(F7Z224N0) ﾗｲｾﾝｽﾗﾝﾌﾟ

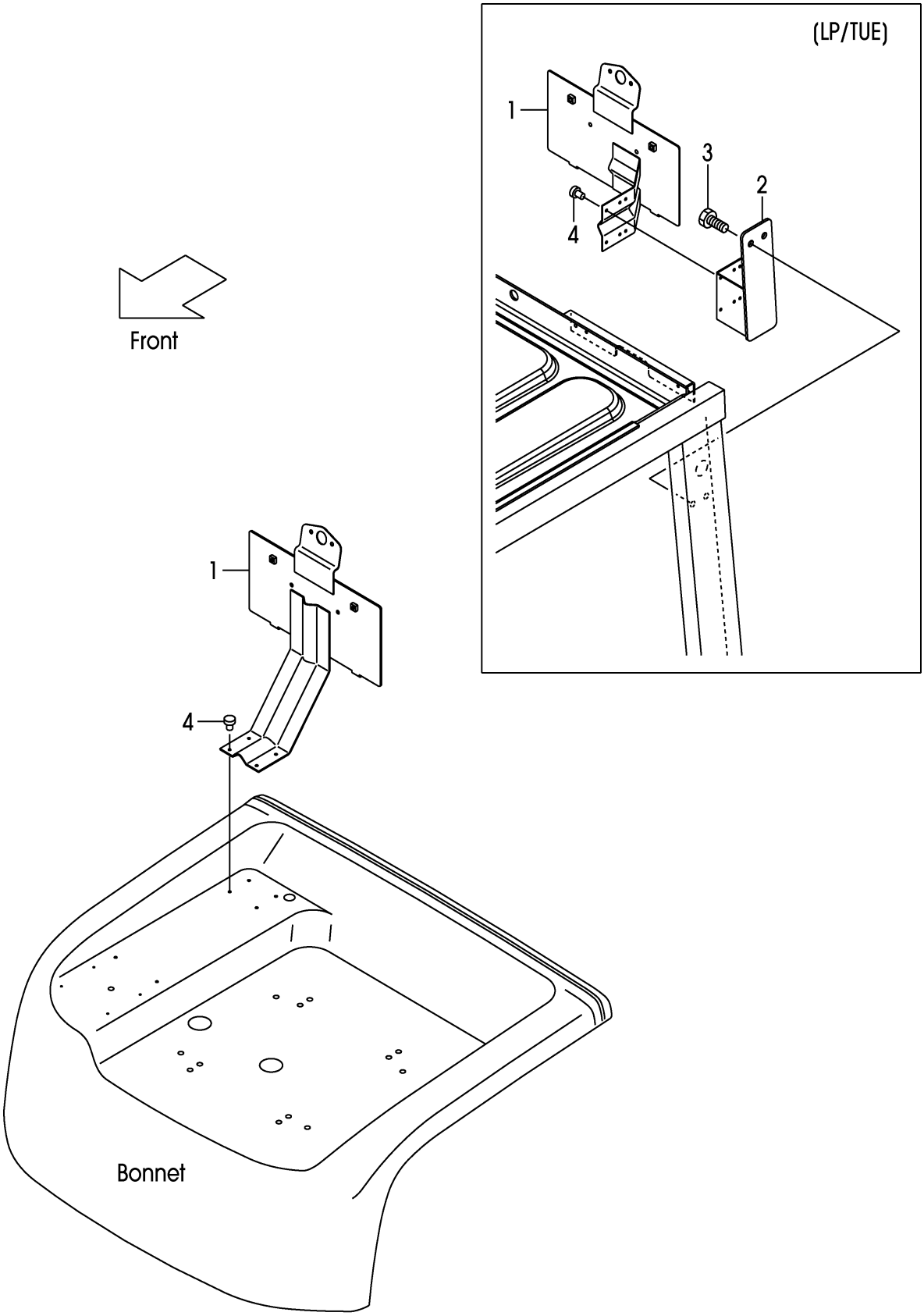

FIG.26

(F7Z224N0)

A:FD20C3Z FD20T3Z FD25C3Z FD25T3Z

Item No	Part No.	Mark	Description	Req'd	Remarks : Serial No.
1	52N59-92101		BRACKET,NUMBER-PLATE ﾌﾞﾗｹｯﾄ	1	[LP]
-	509P9-90101		BRACKET,NUMBER-PLATE ﾌﾞﾗｹｯﾄ	1	[LP/TUE]
2	52N59-92501		BRACKET,LP ﾌﾞﾗｹｯﾄ	1	[LP/TUE]
3	01185-08016		BOLT ﾎﾞﾙﾄ	2	[LP/TUE]
4	22256-42001		RIVET ﾘﾍﾞｯﾄ	4	[LP]

FIG.27 REAR WORKING LIGHT [RWLR]

(F7Z224P0) ﾘﾔｰﾜｰｷﾝｸﾞﾗｲﾄ

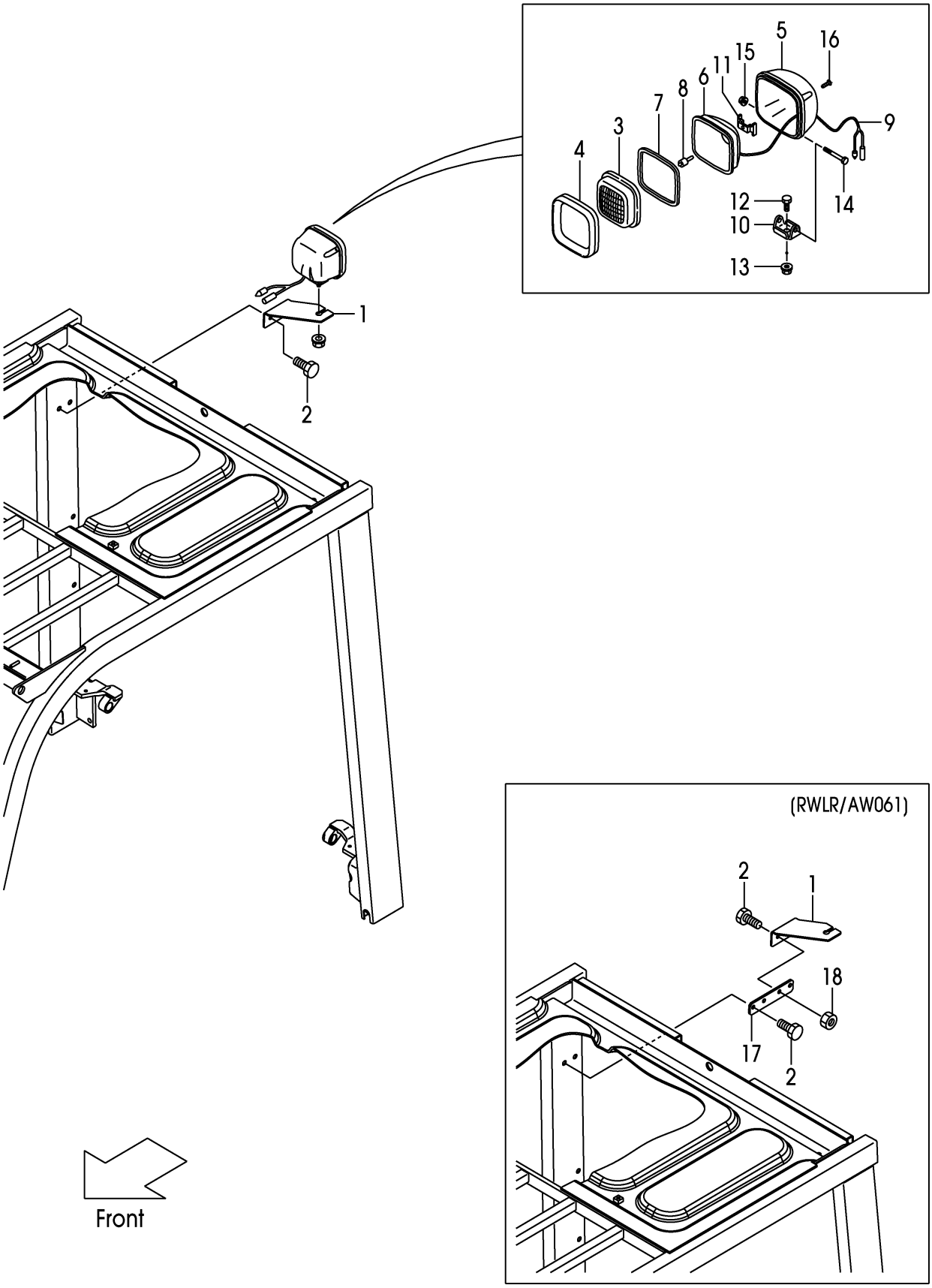

FIG.27

(F7Z224P0)

A:FD20C3Z FD20T3Z FD25C3Z FD25T3Z

Item No	Part No.	Mark	Description		Req'd	Remarks : Serial No.
1	52N51-42161		BRACKET,RWL,RH	ﾌﾞﾗｹｯﾄ	1	[RWLR]
2	01185-08016		BOLT	ﾎﾞﾙﾄ	2	[RWLR]
-	01185-08016		BOLT	ﾎﾞﾙﾄ	4	[RWLR/AW061]
A1	216G2-40602		LAMP-ASSY,HEAD	ﾍｯﾄﾞﾗﾝﾌﾟｱｯｾﾝ	1	[RWLR] INC.3-16
3	216G2-43502		LENS	ﾚﾝｽﾞ	1	[RWLR]
4	216G2-43631		RIM	ﾘﾑ	1	[RWLR]
5	NO PART NO.	#	HOUSING	ﾊｳｼﾞﾝｸﾞ	1	[RWLR]
6	NO PART NO.	#	REFLECTOR	ﾘﾌﾚｸﾀ	1	[RWLR]
7	216G2-43531		GASKET	ｶﾞｽｹｯﾄ	1	[RWLR]
8	216G2-43542		BULB,12V/55W	ﾊﾞﾙﾌﾞ	1	[RWLR]
9	216G2-43551		WIRE,LEAD	ﾜｲﾔ	1	[RWLR]
10	216G2-43562		BRACKET	ﾌﾞﾗｹｯﾄ	1	[RWLR]
11	216G2-43571		SPRING	ｽﾌﾟﾘﾝｸﾞ	1	[RWLR]
12	216G2-43582		BOLT	ﾎﾞﾙﾄ	1	[RWLR]
13	216G2-43592		NUT	ﾅｯﾄ	1	[RWLR]
14	216G2-43602		BOLT	ﾎﾞﾙﾄ	1	[RWLR]
15	216G2-43611		NUT	ﾅｯﾄ	1	[RWLR]
16	216G2-43622		SCREW	ｽｸﾘｭ	4	[RWLR]
17	52N51-42301		PLATE	ﾌﾟﾚｰﾄ	1	[RWLR/AW061]
18	01400-00008		NUT	ﾅｯﾄ	2	[RWLR/AW061]

FIG.28 REAR WORKING LIGHT [RWLL]

(F7Z224Q0) ﾘﾔｰﾜｰｷﾝｸﾞﾗｲﾄ

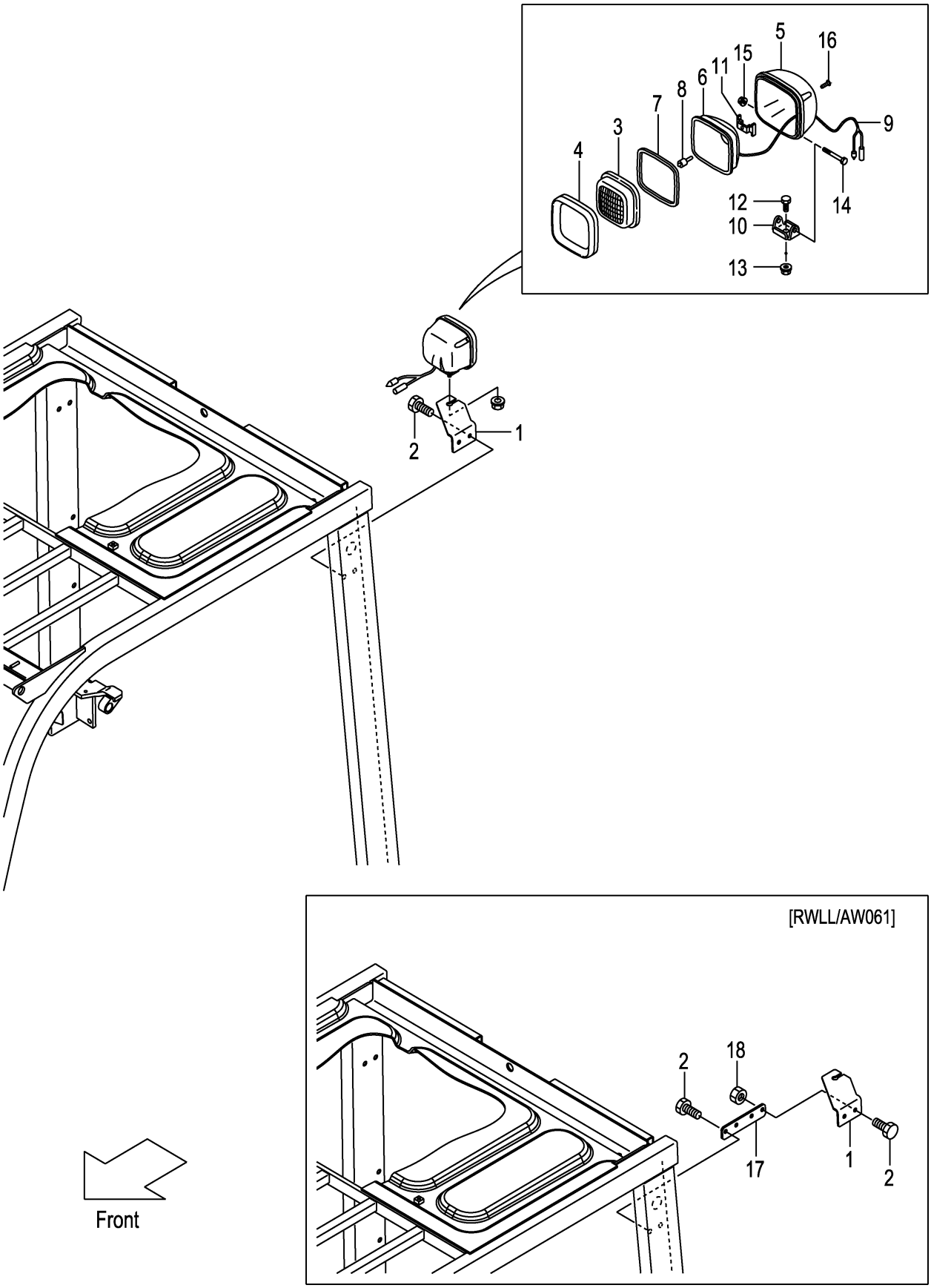

FIG.28

(F7Z224Q0)

A:FD20C3Z FD20T3Z FD25C3Z FD25T3Z

Item No	Part No.	Mark	Description		Req'd	Remarks : Serial No.
1	52N51-42151		BRACKET,RWL,LH	ﾌﾞﾗｹｯﾄ	1	[RWLL]
2	01185-08016		BOLT	ﾎﾞﾙﾄ	2	[RWLL]
-	01185-08016		BOLT	ﾎﾞﾙﾄ	4	[RWLL/AW061]
A1	216G2-40602		LAMP-ASSY,HEAD	ﾍｯﾄﾞﾗﾝﾌﾟｱｯｾﾝ	1	[RWLL] INC.3-16
3	216G2-43502		LENS	ﾚﾝｽﾞ	1	[RWLL]
4	216G2-43631		RIM	ﾘﾑ	1	[RWLL]
5	NO PART NO.	#	HOUSING	ﾊｳｼﾞﾝｸﾞ	1	[RWLL]
6	NO PART NO.	#	REFLECTOR	ﾘﾌﾚｸﾀ	1	[RWLL]
7	216G2-43531		GASKET	ｶﾞｽｹｯﾄ	1	[RWLL]
8	216G2-43542		BULB,12V/55W	ﾊﾞﾙﾌﾞ	1	[RWLL]
9	216G2-43551		WIRE,LEAD	ﾜｲﾔ	1	[RWLL]
10	216G2-43562		BRACKET	ﾌﾞﾗｹｯﾄ	1	[RWLL]
11	216G2-43571		SPRING	ｽﾌﾟﾘﾝｸﾞ	1	[RWLL]
12	216G2-43582		BOLT	ﾎﾞﾙﾄ	1	[RWLL]
13	216G2-43592		NUT	ﾅｯﾄ	1	[RWLL]
14	216G2-43602		BOLT	ﾎﾞﾙﾄ	1	[RWLL]
15	216G2-43611		NUT	ﾅｯﾄ	1	[RWLL]
16	216G2-43622		SCREW	ｽｸﾘｭ	4	[RWLL]
17	52N51-42301		PLATE	ﾌﾟﾚｰﾄ	1	[RWLL/AW061]
18	01400-00008		NUT	ﾅｯﾄ	2	[RWLL/AW061]

FIG.29 REAR WORKING LIGHT [RWL2]

(F7Z224R0) ﾘﾔｰﾜｰｷﾝｸﾞﾗｲﾄ

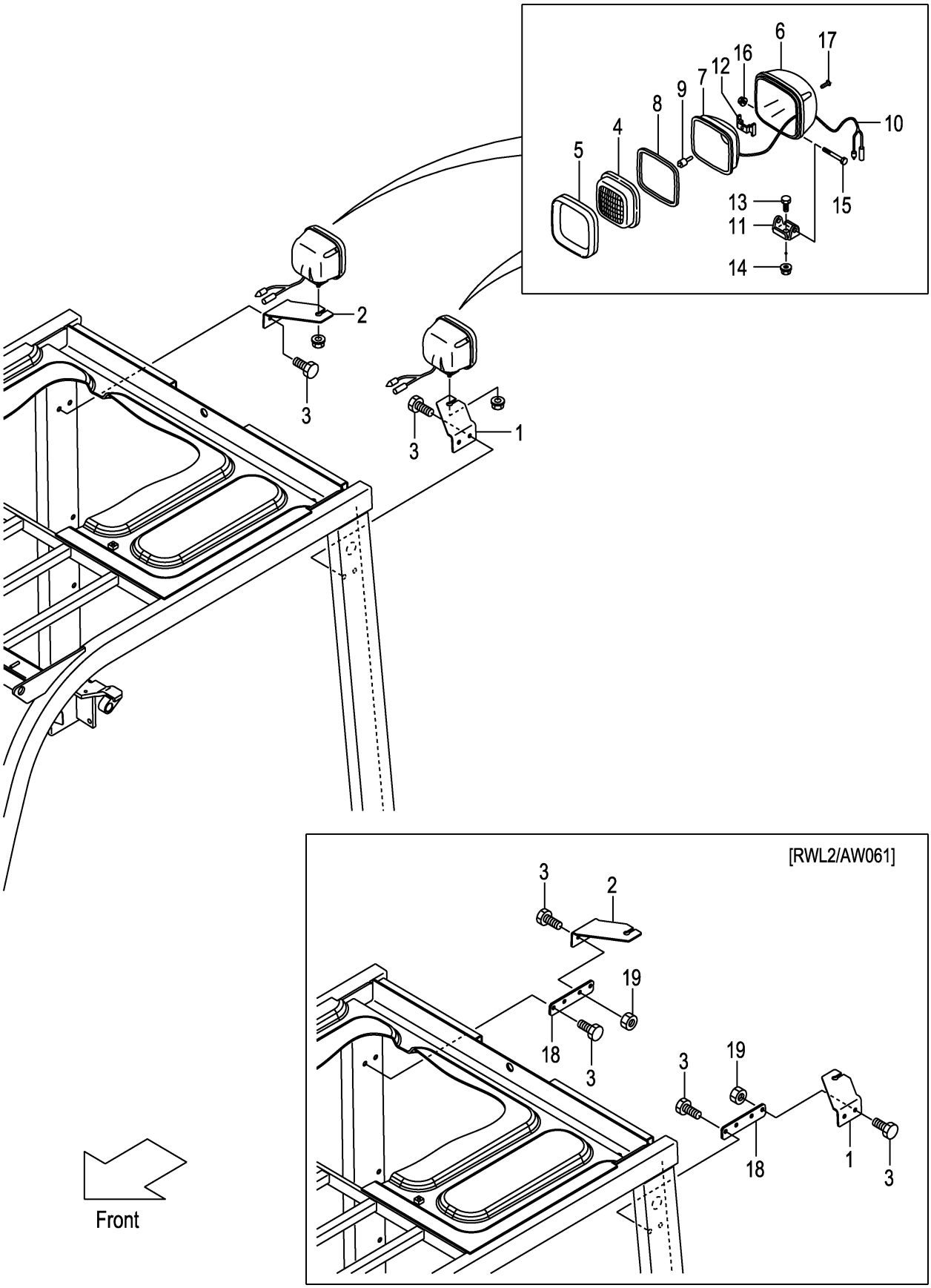

A:FD20C3Z FD20T3Z FD25C3Z FD25T3Z

Item No	Part No.	Mark	Description		Req'd	Remarks : Serial No.
1	52N51-42151		BRACKET,RWL,LH	ﾌﾞﾗｹｯﾄ	1	[RWL2]
2	52N51-42161		BRACKET,RWL,RH	ﾌﾞﾗｹｯﾄ	1	[RWL2]
3	01185-08016		BOLT	ﾎﾞﾙﾄ	4	[RWL2]
-	01185-08016		BOLT	ﾎﾞﾙﾄ	8	[RWL2/AW061]
A1	216G2-40602		LAMP-ASSY,HEAD	ﾍｯﾄﾞﾗﾝﾌﾟｱｯｾﾝ	2	[RWL2] INC.4-17
4	216G2-43502		LENS	ﾚﾝｽﾞ	2	[RWL2]
5	216G2-43631		RIM	ﾘﾑ	2	[RWL2]
6	NO PART NO.	#	HOUSING	ﾊｳｼﾞﾝｸﾞ	2	[RWL2]
7	NO PART NO.	#	REFLECTOR	ﾘﾌﾚｸﾀ	2	[RWL2]
8	216G2-43531		GASKET	ｶﾞｽｹｯﾄ	2	[RWL2]
9	216G2-43542		BULB,12V/55W	ﾊﾞﾙﾌﾞ	2	[RWL2]
10	216G2-43551		WIRE,LEAD	ﾜｲﾔ	2	[RWL2]
11	216G2-43562		BRACKET	ﾌﾞﾗｹｯﾄ	2	[RWL2]
12	216G2-43571		SPRING	ｽﾌﾟﾘﾝｸﾞ	2	[RWL2]
13	216G2-43582		BOLT	ﾎﾞﾙﾄ	2	[RWL2]
14	216G2-43592		NUT	ﾅｯﾄ	2	[RWL2]
15	216G2-43602		BOLT	ﾎﾞﾙﾄ	2	[RWL2]
16	216G2-43611		NUT	ﾅｯﾄ	2	[RWL2]
17	216G2-43622		SCREW	ｽｸﾘｭ	8	[RWL2]
18	52N51-42301		PLATE	ﾌﾟﾚｰﾄ	2	[RWL2/AW061]
19	01400-00008		NUT	ﾅｯﾄ	4	[RWL2/AW061]

FIG.30 REAR WORKING LIGHT [RWL/FE][RWL/TUE]

(F7Z224S0) ﾘﾔｰﾜｰｷﾝｸﾞﾗｲﾄ

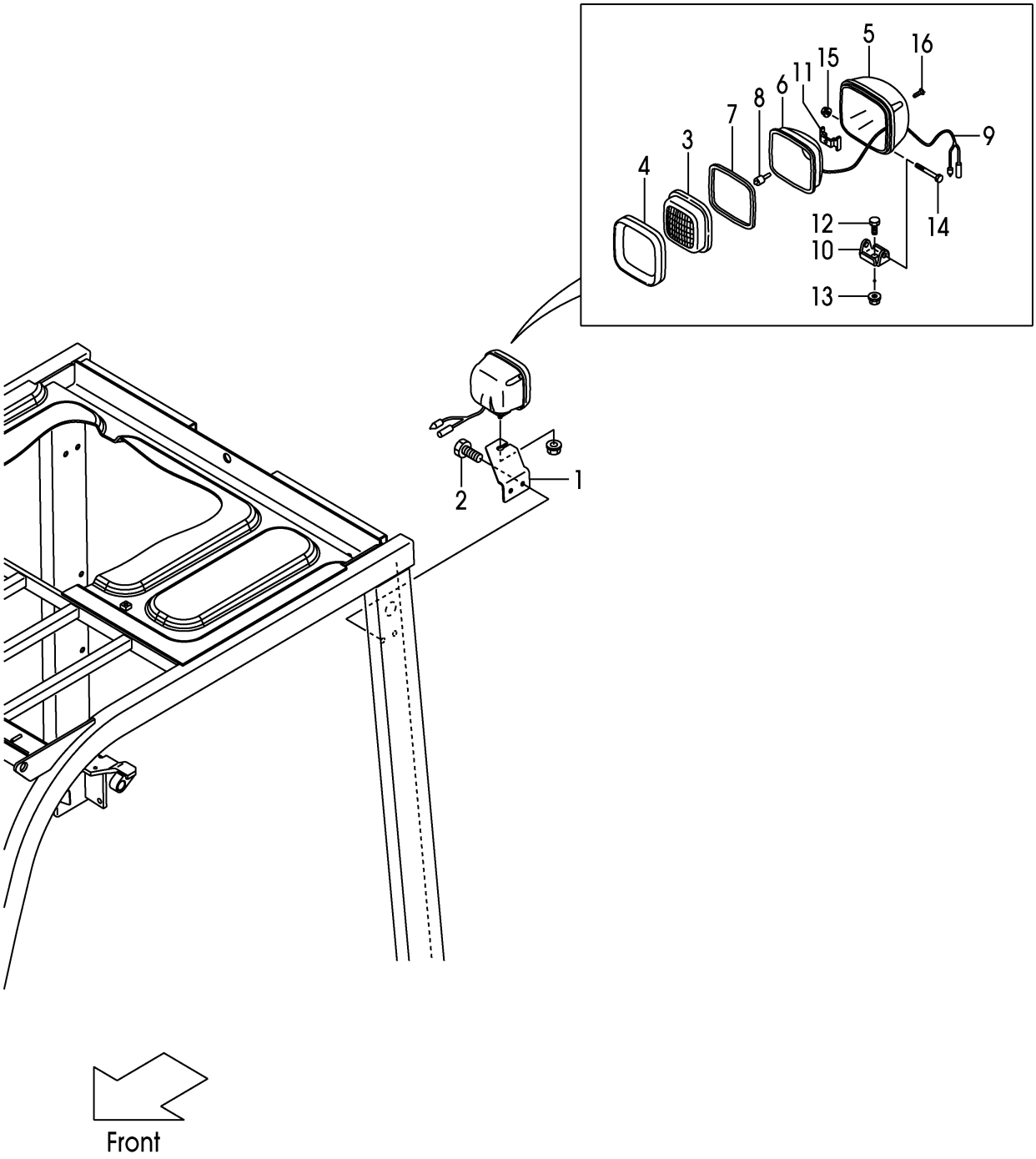

A:FD20C3Z FD20T3Z FD25C3Z FD25T3Z:119-

Item No	Part No.	Mark	Description		Req'd	Remarks : Serial No.
1	52N51-42151		BRACKET,RWL,LH	ﾌﾞﾗｹｯﾄ	1	[RWL/FE][RWL/TUE][RWL/CAKB]
2	01185-08016		BOLT	ﾎﾞﾙﾄ	2	[RWL/FE][RWL/TUE][RWL/CAKB]
A1	216G2-40602		LAMP-ASSY,HEAD	ﾍｯﾄﾞﾗﾝﾌﾟｱｯｾﾝ	1	[RWL/FE][RWL/TUE][RWL/CAKB]
						INC.3-16
3	216G2-43502		LENS	ﾚﾝｽﾞ	1	[RWL/FE][RWL/TUE][RWL/CAKB]
4	216G2-43631		RIM	ﾘﾑ	1	[RWL/FE][RWL/TUE][RWL/CAKB]
5	NO PART NO.	#	HOUSING	ﾊｳｼﾞﾝｸﾞ	1	[RWL/FE][RWL/TUE][RWL/CAKB]
6	NO PART NO.	#	REFLECTOR	ﾘﾌﾚｸﾀ	1	[RWL/FE][RWL/TUE][RWL/CAKB]
7	216G2-43531		GASKET	ｶﾞｽｹｯﾄ	1	[RWL/FE][RWL/TUE][RWL/CAKB]
8	216G2-43542		BULB,12V/55W	ﾊﾞﾙﾌﾞ	1	[RWL/FE][RWL/TUE][RWL/CAKB]
9	216G2-43551		WIRE,LEAD	ﾜｲﾔ	1	[RWL/FE][RWL/TUE][RWL/CAKB]
10	216G2-43562		BRACKET	ﾌﾞﾗｹｯﾄ	1	[RWL/FE][RWL/TUE][RWL/CAKB]
11	216G2-43571		SPRING	ｽﾌﾟﾘﾝｸﾞ	1	[RWL/FE][RWL/TUE][RWL/CAKB]
12	216G2-43582		BOLT	ﾎﾞﾙﾄ	1	[RWL/FE][RWL/TUE][RWL/CAKB]
13	216G2-43592		NUT	ﾅｯﾄ	1	[RWL/FE][RWL/TUE][RWL/CAKB]
14	216G2-43602		BOLT	ﾎﾞﾙﾄ	1	[RWL/FE][RWL/TUE][RWL/CAKB]
15	216G2-43611		NUT	ﾅｯﾄ	1	[RWL/FE][RWL/TUE][RWL/CAKB]
16	216G2-43622		SCREW	ｽｸﾘｭ	4	[RWL/FE][RWL/TUE][RWL/CAKB]

FIG.31 REAR WORKING LIGHT WIRE HARNESS [RWL]

(F7Z224T0) リヤーワーキング゛ライトワイヤハーネス

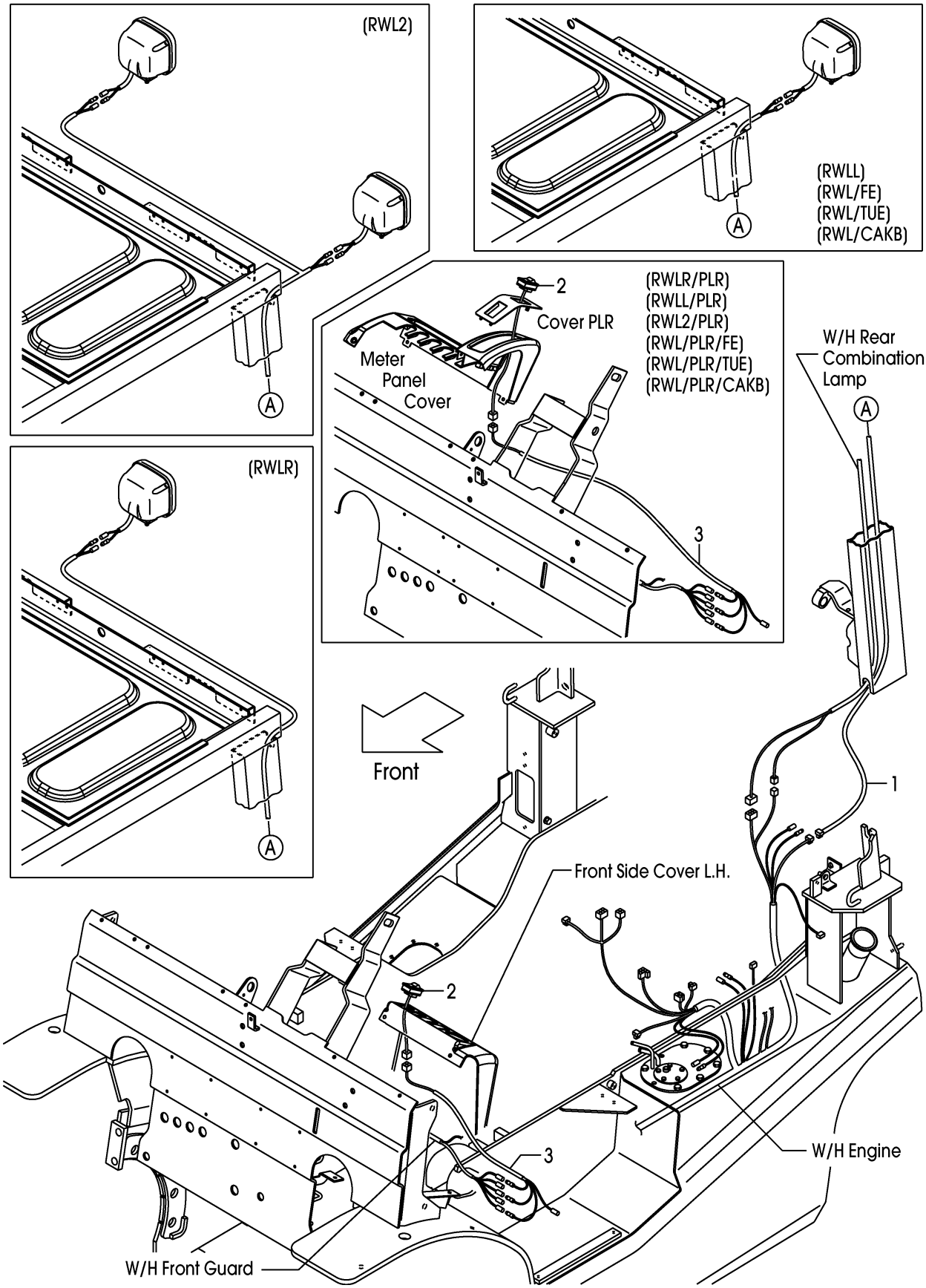

FIG.31
(F7Z224T0)

A:FD20C3Z FD20T3Z FD25C3Z FD25T3Z

Item No	Part No.	Mark	Description		Req'd	Remarks : Serial No.
1	52N51-42101		WIRE,LEAD,RWL	ﾜｲﾔ	1	[RWLR]
-	52N51-42111		WIRE,LEAD,RWL	ﾜｲﾔ	1	[RWLL]
-	52N51-42121		WIRE,LEAD,RWL	ﾜｲﾔ	1	[RWL2]
-	52N51-42111		WIRE,LEAD,RWL	ﾜｲﾔ	1	119- [RWL/FE][RWL/TUE][RWL/CAKB]
2	52N51-42401		SWITCH,RWL	ｽｲｯﾁ	1	[RWLR][RWLL][RWL2]
-	52N51-42401		SWITCH,RWL	ｽｲｯﾁ	1	119- [RWL/FE][RWL/TUE][RWL/CAKB]
3	52N51-42411		WIRE-HARNESS,SWITCH	ﾜｲﾔﾊｰﾈｽ	1	[RWLR][RWLL][RWL2]
-	52N51-42411		WIRE-HARNESS,SWITCH	ﾜｲﾔﾊｰﾈｽ	1	119- [RWL/FE][RWL/TUE][RWL/CAKB]
-	52N51-42511		WIRE-HARNESS,SWITCH	ﾜｲﾔﾊｰﾈｽ	1	[RWLR/PLR][RWLL/PLR] [RWL2/PLR]
-	52N51-42511		WIRE-HARNESS,SWITCH	ﾜｲﾔﾊｰﾈｽ	1	119- [RWL/PLR/FE][RWL/PLR/TUE] [RWL/PLR/CAKB]

FIG.32 REAR WORKING LIGHT WIRE HARNESS [RWL/BBR]

(F7Z224U0) リヤーワーキング゛ライトワイヤハーネス

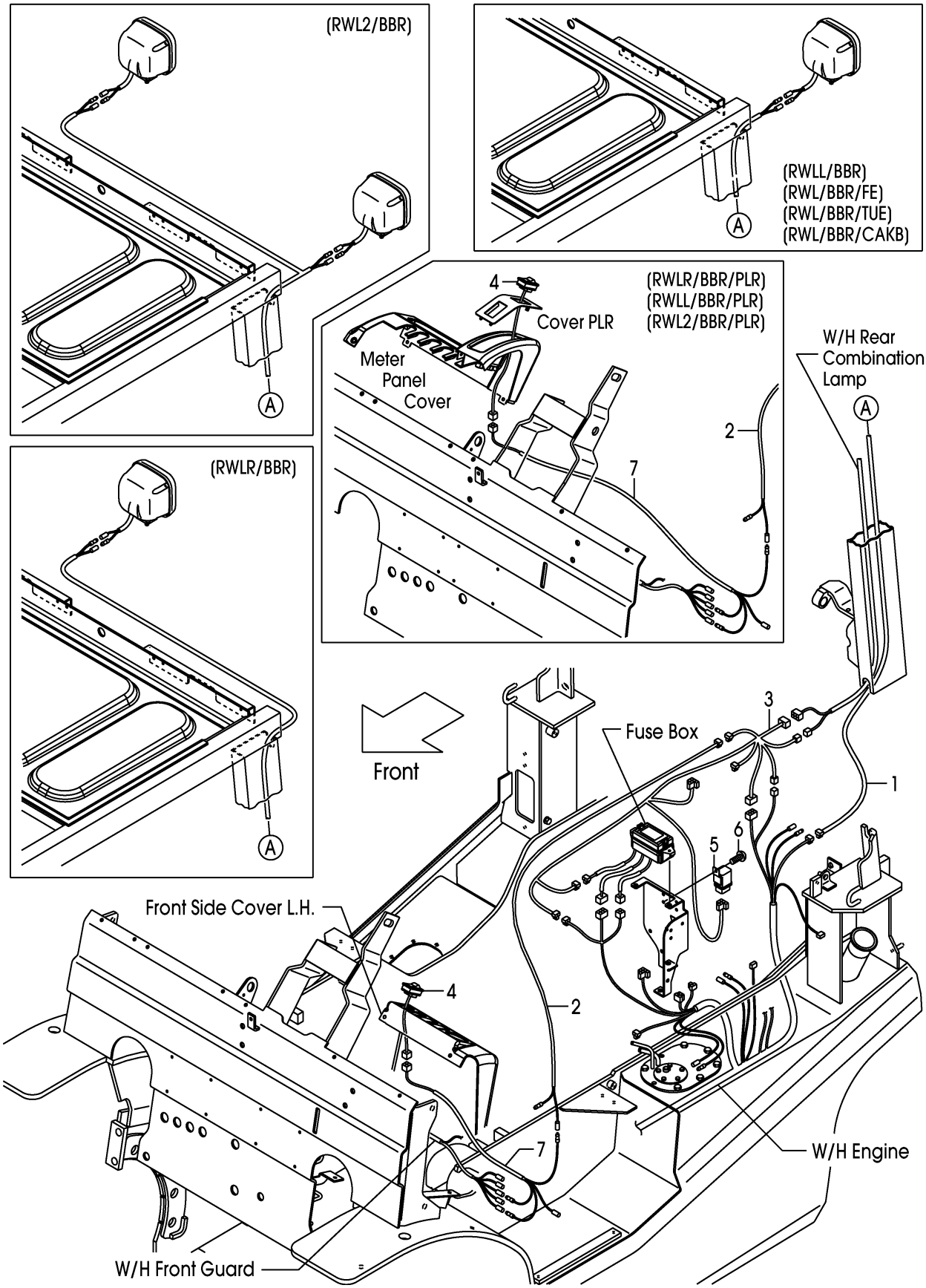

A:FD20C3Z FD20T3Z FD25C3Z FD25T3Z

Item No	Part No.	Mark	Description		Req'd	Remarks : Serial No.
1	52N51-42101		WIRE,LEAD,RWL	ﾜｲﾔ	1	[RWLR/BBR]
-	52N51-42111		WIRE,LEAD,RWL	ﾜｲﾔ	1	[RWLL/BBR]
-	52N51-42121		WIRE,LEAD,RWL	ﾜｲﾔ	1	[RWL2/BBR]
-	52N51-42111		WIRE,LEAD,RWL	ﾜｲﾔ	1	119- [RWL/BBR/FE][RWL/BBR/TUE] [RWL/BBR/CAKB]
2	516G1-42111		WIRE,LEAD,RWL	ﾜｲﾔ	1	[RWLR/BBR][RWLL/BBR] [RWL2/BBR]
-	516G1-42111		WIRE,LEAD,RWL	ﾜｲﾔ	1	119- [RWL/BBR/FE][RWL/BBR/TUE] [RWL/BBR/CAKB]
3	52N58-92111		WIRE-HARNESS,BBR	ﾜｲﾔﾊｰﾈｽ	1	[RWLR/BBR](-2006.4.2)
-	52N58-92112		WIRE-HARNESS,BBR	ﾜｲﾔﾊｰﾈｽ	1	[RWLR/BBR](2006.4.3-)
-	52N58-92111		WIRE-HARNESS,BBR	ﾜｲﾔﾊｰﾈｽ	1	[RWLL/BBR](-2006.4.2)
-	52N58-92112		WIRE-HARNESS,BBR	ﾜｲﾔﾊｰﾈｽ	1	[RWLL/BBR](2006.4.3-)
-	52N58-92111		WIRE-HARNESS,BBR	ﾜｲﾔﾊｰﾈｽ	1	[RWL2/BBR](-2006.4.2)
-	52N58-92112		WIRE-HARNESS,BBR	ﾜｲﾔﾊｰﾈｽ	1	[RWL2/BBR](2006.4.3-)
-	52N58-92111		WIRE-HARNESS,BBR	ﾜｲﾔﾊｰﾈｽ	1	119- [RWL/BBR/FE](-2006.4.2)
-	52N58-92112		WIRE-HARNESS,BBR	ﾜｲﾔﾊｰﾈｽ	1	119- [RWL/BBR/FE](2006.4.3-)
-	52N58-92111		WIRE-HARNESS,BBR	ﾜｲﾔﾊｰﾈｽ	1	119- [RWL/BBR/TUE](-2006.4.2)
-	52N58-92112		WIRE-HARNESS,BBR	ﾜｲﾔﾊｰﾈｽ	1	119- [RWL/BBR/TUE](2006.4.3-)
-	52N58-92111		WIRE-HARNESS,BBR	ﾜｲﾔﾊｰﾈｽ	1	119- [RWL/BBR/CAKB](-2006.4.2)
-	52N58-92112		WIRE-HARNESS,BBR	ﾜｲﾔﾊｰﾈｽ	1	119- [RWL/BBR/CAKB](2006.4.3-)
4	52N51-42401		SWITCH,RWL	ｽｲｯﾁ	1	[RWLR/BBR][RWLL/BBR] [RWL2/BBR]
-	52N51-42401		SWITCH,RWL	ｽｲｯﾁ	1	119- [RWL/BBR/FE][RWL/BBR/TUE] [RWL/BBR/CAKB]
5	26062-42881		RELAY,12V	ﾘﾚｰ	1	[RWLR/BBR](-2006.4.2)
-	209K2-42351		RELAY,12V	ﾘﾚｰ	1	[RWLR/BBR](2006.4.3-)
-	26062-42881		RELAY,12V	ﾘﾚｰ	1	[RWLL/BBR](-2006.4.2)
-	209K2-42351		RELAY,12V	ﾘﾚｰ	1	[RWLL/BBR](2006.4.3-)
-	26062-42881		RELAY,12V	ﾘﾚｰ	1	[RWL2/BBR](-2006.4.2)
-	209K2-42351		RELAY,12V	ﾘﾚｰ	1	[RWL2/BBR](2006.4.3-)
-	26062-42881		RELAY,12V	ﾘﾚｰ	1	119- [RWL/BBR/FE](-2006.4.2)
-	209K2-42351		RELAY,12V	ﾘﾚｰ	1	119- [RWL/BBR/FE](2006.4.3-)
-	26062-42881		RELAY,12V	ﾘﾚｰ	1	119- [RWL/BBR/TUE](-2006.4.2)
-	209K2-42351		RELAY,12V	ﾘﾚｰ	1	119- [RWL/BBR/TUE](2006.4.3-)
-	26062-42881		RELAY,12V	ﾘﾚｰ	1	119- [RWL/BBR/CAKB](-2006.4.2)

FIG.32 REAR WORKING LIGHT WIRE HARNESS [RWL/BBR]

(F7Z224U0) リヤーワーキング゛ライトワイヤハーネス

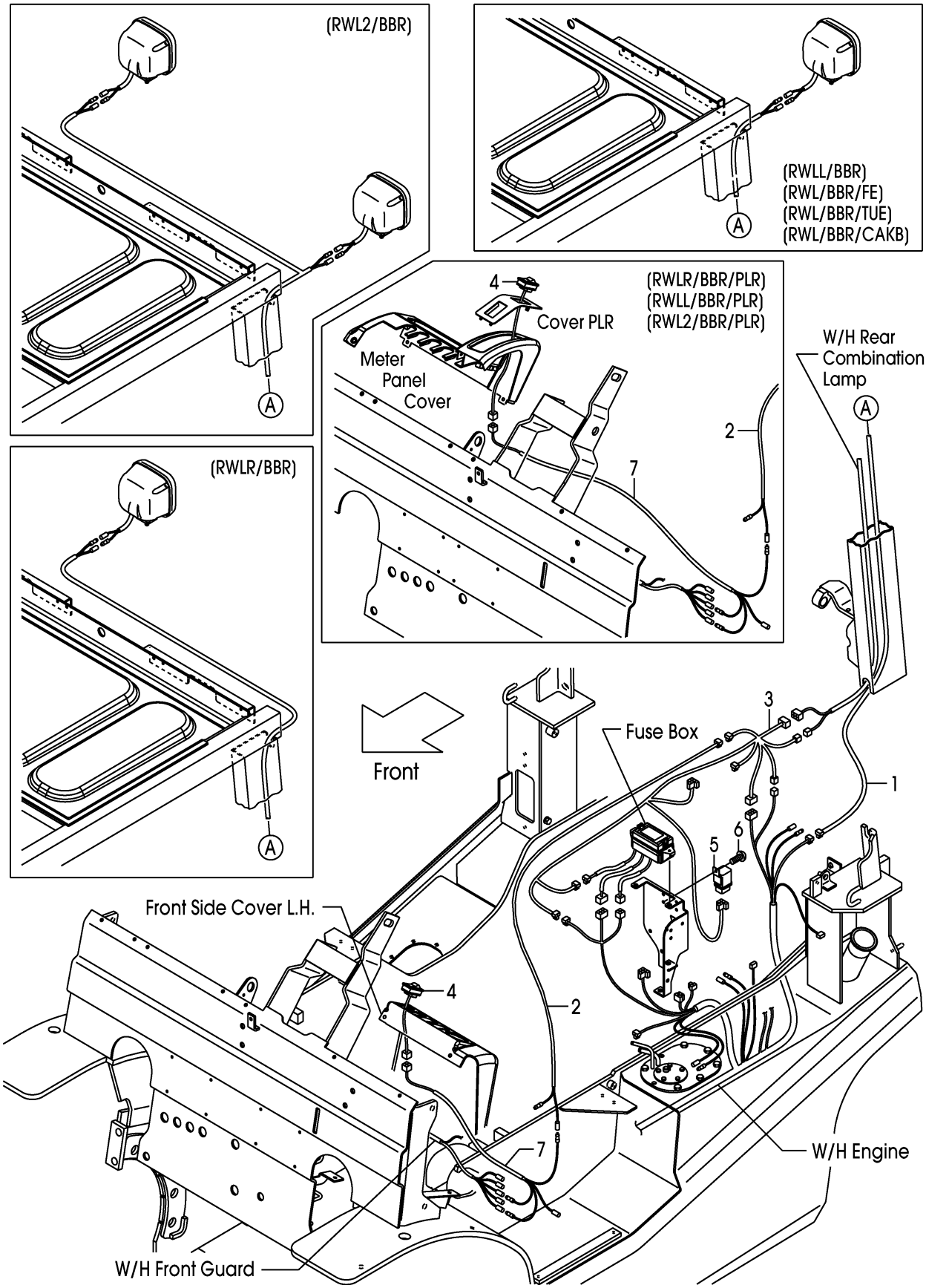

A:FD20C3Z FD20T3Z FD25C3Z FD25T3Z

Item No	Part No.	Mark	Description		Req'd	Remarks : Serial No.
-	209K2-42351		RELAY,12V	ﾘﾚｰ	1	119- [RWL/BBR/CAKB](2006.4.3-)
6	214A2-42611		SCREW	ｽｸﾘｭ	1	[RWLR/BBR][RWLL/BBR] [RWL2/BBR]
-	214A2-42611		SCREW	ｽｸﾘｭ	1	119- [RWL/BBR/FE][RWL/BBR/TUE] [RWL/BBR/CAKB]
7	52N51-42411		WIRE-HARNESS,SWITCH	ﾜｲﾔﾊｰﾈｽ	1	[RWLR/BBR][RWLL/BBR] [RWL2/BBR]
-	52N51-42411		WIRE-HARNESS,SWITCH	ﾜｲﾔﾊｰﾈｽ	1	119- [RWL/BBR/FE][RWL/BBR/TUE] [RWL/BBR/CAKB]
-	52N51-42511		WIRE-HARNESS,SWITCH	ﾜｲﾔﾊｰﾈｽ	1	[RWLR/BBR/PLR][RWLL/BBR/PLR] [RWL2/BBR/PLR]

FIG.33 REVOLVING LIGHT [RLY][RLR]

(F7Z224V0) ﾘﾎﾞﾙﾋﾞﾝｸﾞﾗｲﾄ

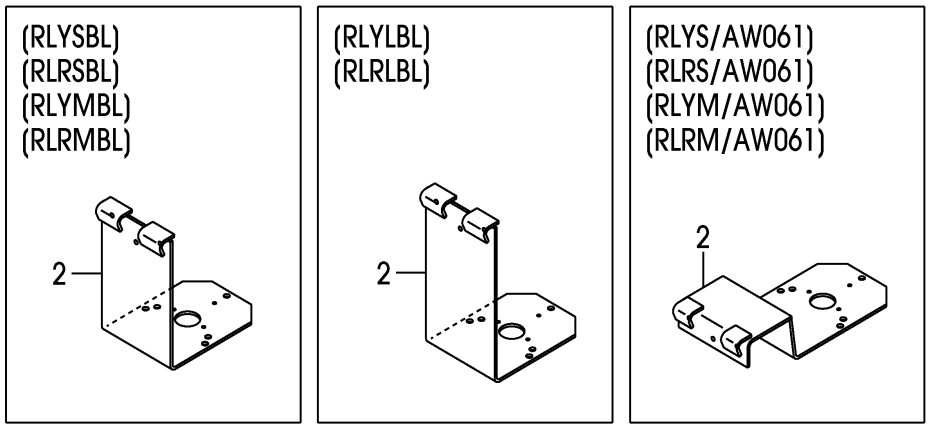

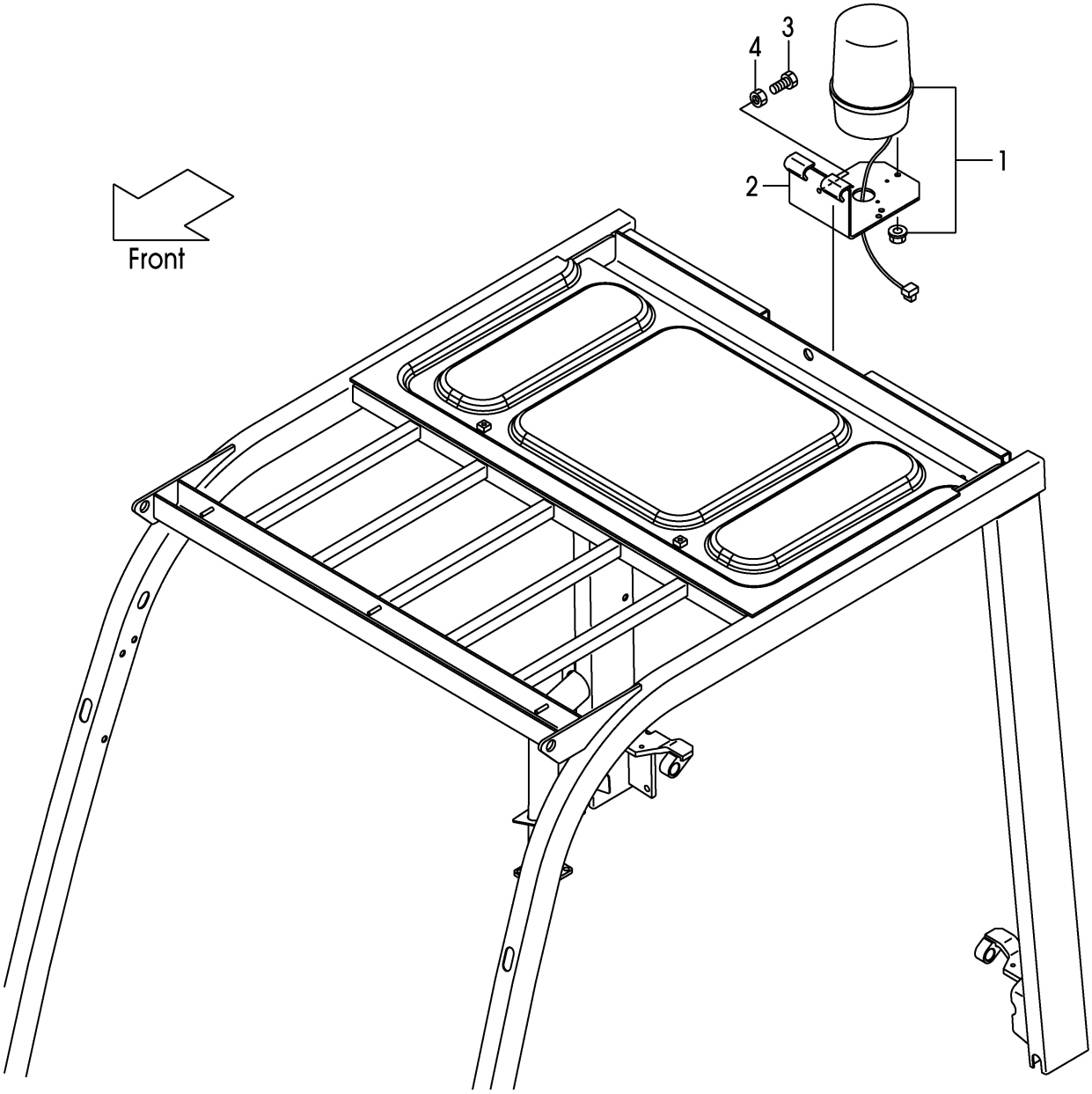

A:FD20C3Z FD20T3Z FD25C3Z FD25T3Z

Item No	Part No.	Mark	Description		Req'd	Remarks : Serial No.
1	514A1-41001		LIGHT,REVOLVING	ﾗｲﾄ	1	[RLYS][RLYSBL]
-	514A1-41011		LIGHT,REVOLVING	ﾗｲﾄ	1	[RLRS][RLRSBL]
-	514A1-41021		LIGHT,REVOLVING	ﾗｲﾄ	1	[RLYM][RLYMBL]
-	514A1-41031		LIGHT,REVOLVING	ﾗｲﾄ	1	[RLRM][RLRMBL]
-	52N58-92201		LIGHT,REVOLVING	ﾗｲﾄ	1	[RLYL][RLYLBL]
-	52N58-92211		LIGHT,REVOLVING	ﾗｲﾄ	1	[RLRL][RLRLBL]
2	529F1-42251		BRACKET,REVOLVING	ﾌﾞﾗｹｯﾄ	1	[RLYS][RLRS][RLYM][RLRM] [RLYL][RLRL]
-	529F1-42201		BRACKET,REVOLVING	ﾌﾞﾗｹｯﾄ	1	[RLYSBL][RLRSBL][RLYMBL] [RLRMBL]
-	52N58-92251		BRACKET,REVOLVING	ﾌﾞﾗｹｯﾄ	1	[RLYLBL][RLRLBL]
-	539A8-92251		BRACKET,REVOLVING	ﾌﾞﾗｹｯﾄ	1	[RLYS/AW061][RLRS/AW061] [RLYM/AW061][RLRM/AW061]
3	01100-08020		BOLT	ﾎﾞﾙﾄ	3	[RLYS][RLYM][RLYL]
-	01100-08020		BOLT	ﾎﾞﾙﾄ	3	[RLRS][RLRM][RLRL]
-	01100-08020		BOLT	ﾎﾞﾙﾄ	3	[RLYSBL][RLRSBL][RLYMBL] [RLRMBL][RLYLBL][RLRLBL]
4	01400-00008		NUT	ﾅｯﾄ	3	[RLYS][RLYM][RLYL]
-	01400-00008		NUT	ﾅｯﾄ	3	[RLRS][RLRM][RLRL]
-	01400-00008		NUT	ﾅｯﾄ	3	[RLYSBL][RLRSBL][RLYMBL] [RLRMBL][RLYLBL][RLRLBL]

FIG.34 REVOLVING LIGHT WIRE HARNESS [RLY][RLR]

(F7Z224W0) ﾘﾎﾞﾙﾋﾞﾝｸﾞﾗｲﾄﾜｲﾔﾊｰﾈｽ

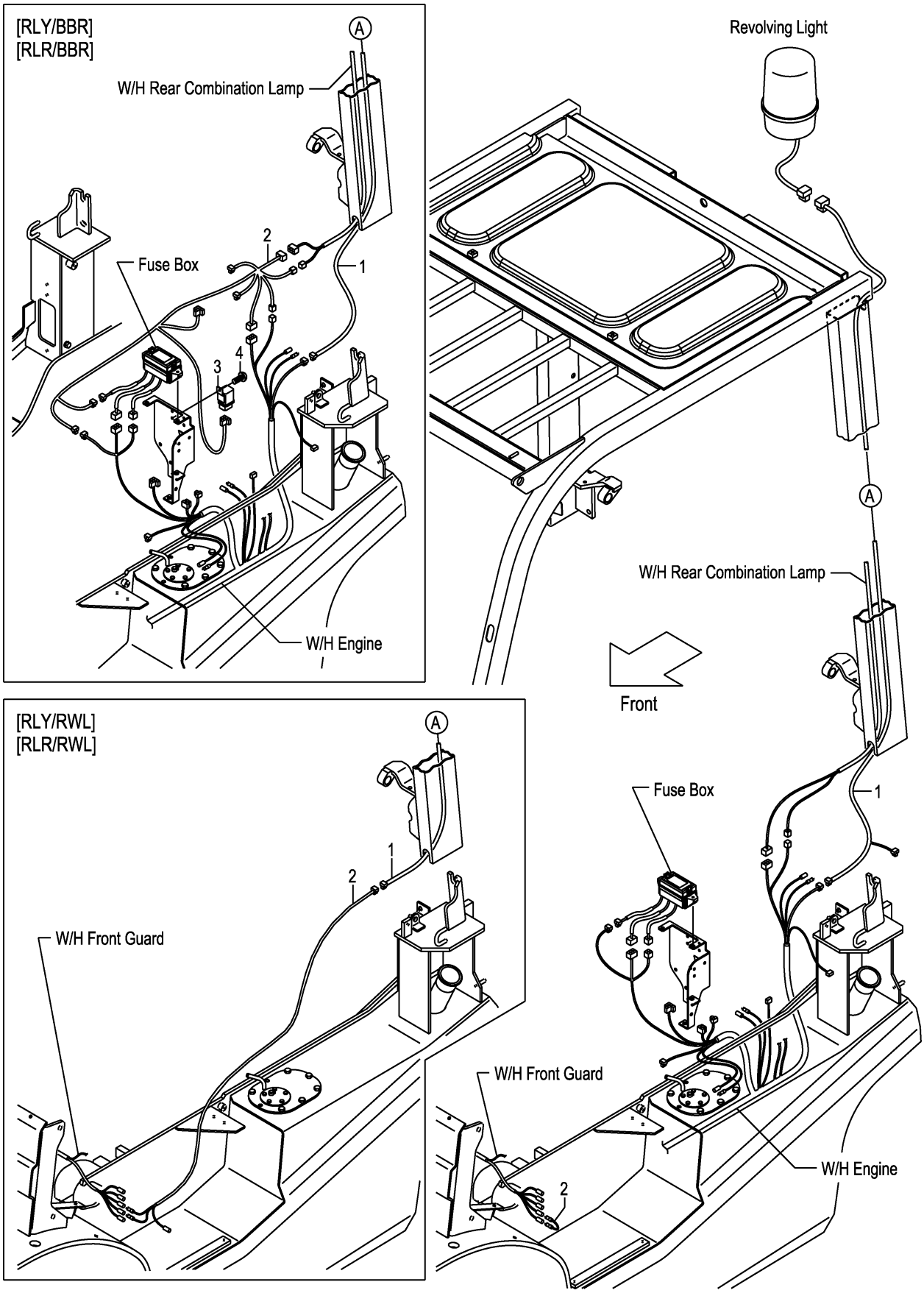

FIG.34

(F7Z224W0)

A:FD20C3Z FD20T3Z FD25C3Z FD25T3Z

Item No	Part No.	Mark	Description		Req'd	Remarks : Serial No.
1	52N58-92001		WIRE,LEAD	ﾜｲﾔ	1	[RLY][RLR]
-	52N58-92021		WIRE,LEAD	ﾜｲﾔ	1	[RLY/BBR][RLR/BBR][RLY/RWL] [RLR/RWL]
2	516G1-42211		WIRE,LEAD	ﾜｲﾔ	1	[RLY][RLR]
-	52N58-92111		WIRE-HARNESS,BBR	ﾜｲﾔﾊｰﾈｽ	1	[RLY/BBR][RLR/BBR](-2006.4.2)
-	52N58-92112		WIRE-HARNESS,BBR	ﾜｲﾔﾊｰﾈｽ	1	[RLY/BBR][RLR/BBR](2006.4.3-)
-	52N58-92041		WIRE,LEAD	ﾜｲﾔ	1	[RLY/RWL][RLR/RWL]
3	26062-42881		RELAY,12V	ﾘﾚｰ	1	[RLY/BBR][RLR/BBR](-2006.4.2)
-	209K2-42351		RELAY,12V	ﾘﾚｰ	1	[RLY/BBR][RLR/BBR](2006.4.3-)
4	214A2-42611		SCREW	ｽｸﾘｭ	1	[RLY/BBR][RLR/BBR]

FIG.35 SPOT LIGHT [SPL]

(F7Z22640) スポットライト

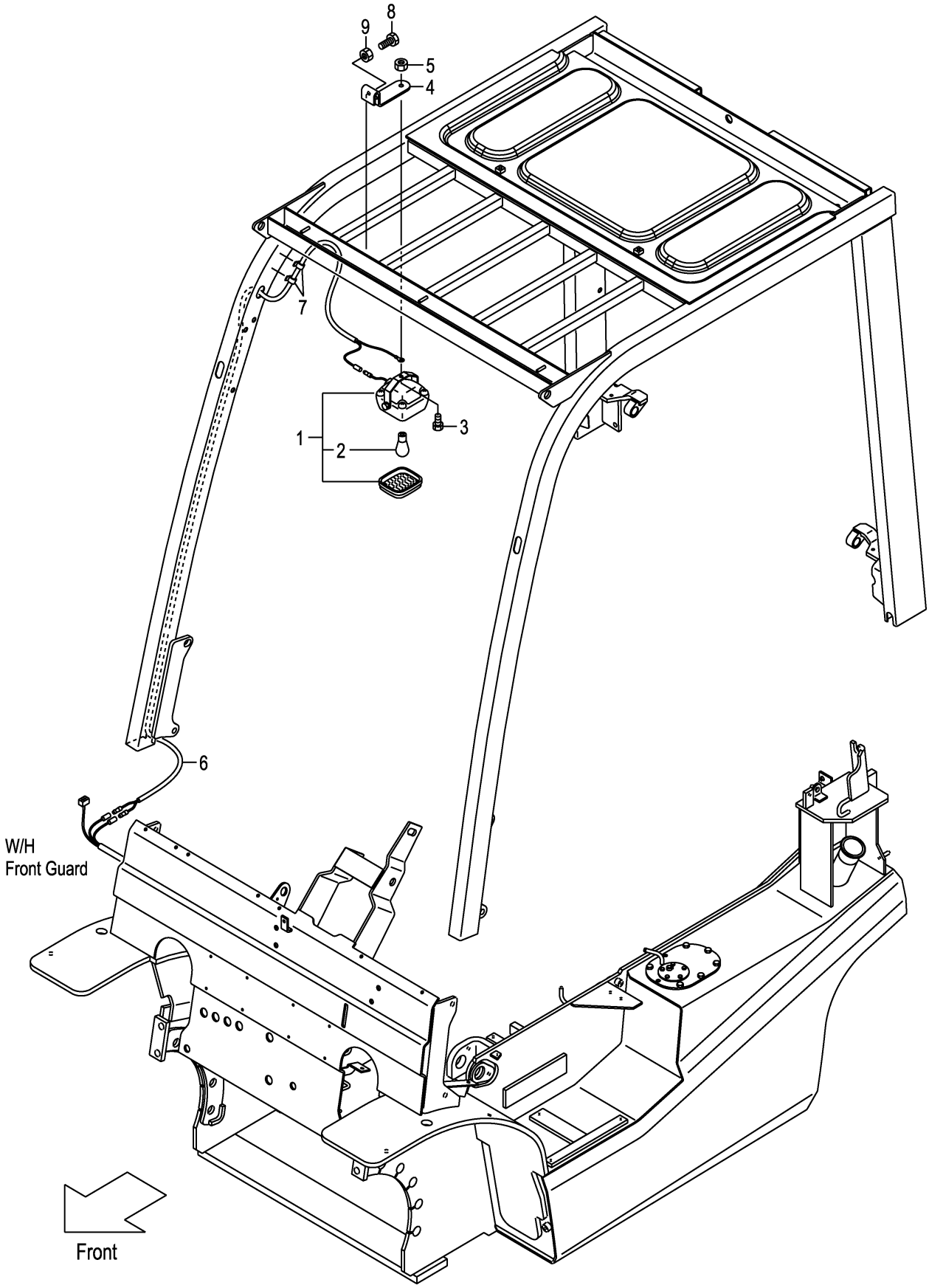

FIG.35

(F7Z22640)

A:FD20C3Z FD20T3Z FD25C3Z FD25T3Z

Item No	Part No.	Mark	Description		Req'd	Remarks : Serial No.
1	516G9-10101		LAMP	ﾗﾝﾌﾟ	1	[SPL] INC.2
2	516G9-12011		BULB,12V/18.2W	ﾊﾞﾙﾌﾞ	1	[SPL]
3	01185-08016		BOLT	ﾎﾞﾙﾄ	1	[SPL]
4	52N59-02001		BRACKET,SPOT-LAMP	ﾌﾞﾗｹｯﾄ	1	[SPL]
5	01400-00008		NUT	ﾅｯﾄ	1	[SPL]
6	539A9-02011		WIRE-HARNESS,SPOT-L.	ﾜｲﾔﾊｰﾈｽ	1	[SPL]
7	27732-42311		CLAMP,HARNESS	ｸﾗﾝﾌﾟ	2	[SPL]
8	01100-08025		BOLT	ﾎﾞﾙﾄ	2	[SPL]
9	01402-00008		NUT	ﾅｯﾄ	2	[SPL]

FIG.36 BACK BUZZER

(F7Z224X0) ﾊﾞｯｸﾌﾞｻﾞｰ

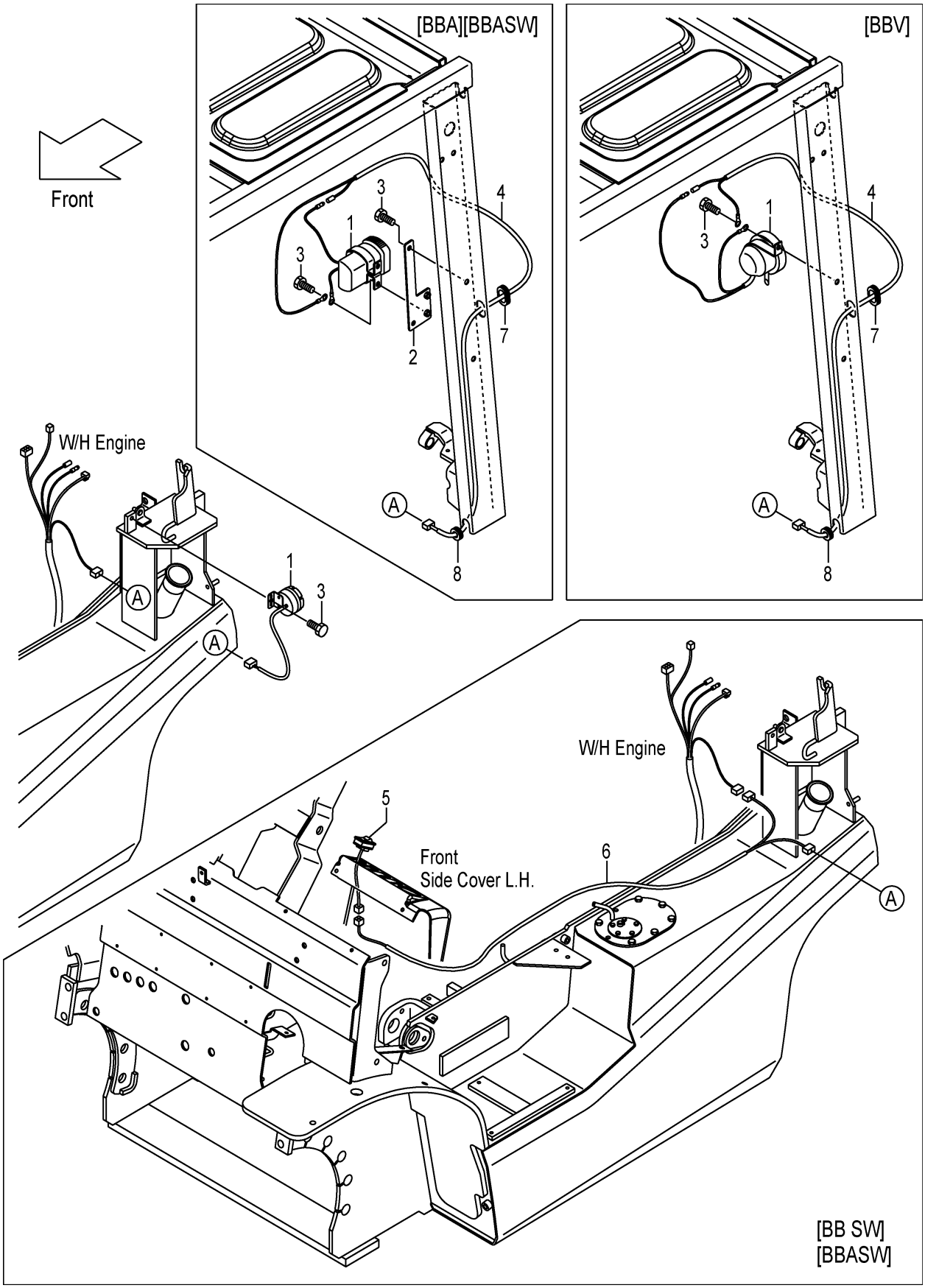

FIG.36

(F7Z224X0)

A:FD20C3Z FD20T3Z FD25C3Z FD25T3Z

Item No	Part No.	Mark	Description		Req'd	Remarks : Serial No.
1	234A2-42301		BUZZER,BACK,12V	ﾌﾞｻﾞｰ	1	
-	214A2-44001		BUZZER,BACK,12V	ﾌﾞｻﾞｰ	1	[BBA][BBASW]
-	52N51-30201		ALARM,VOICE	ｱﾗｰﾑ	1	[BBV]
2	50A71-31001		BRACKET,BBA	ﾌﾞﾗｹｯﾄ	1	[BBA][BBASW]
3	01183-08012		BOLT	ﾎﾞﾙﾄ	1	
-	01183-08016		BOLT	ﾎﾞﾙﾄ	4	[BBA][BBASW]
-	01183-08016		BOLT	ﾎﾞﾙﾄ	1	[BBV]
4	516G1-32012		WIRE,LEAD	ﾜｲﾔ	1	[BBA][BBASW][BBV]
5	52N51-32101		SWITCH,ON/OFF	ｽｲｯﾁ	1	[BB SW][BBASW]
6	52N51-32001		WIRE,LEAD,BBSW	ﾜｲﾔ	1	[BB SW][BBASW]
7	27662-62721		GROMMET	ｸﾞﾛﾒｯﾄ	1	[BBA][BBASW][BBV]
8	27792-63381		GROMMET	ｸﾞﾛﾒｯﾄ	1	[BBA][BBASW][BBV]

FIG.37 HEATER UNIT [HR]

(F7Z224Y0) ヒータユニット

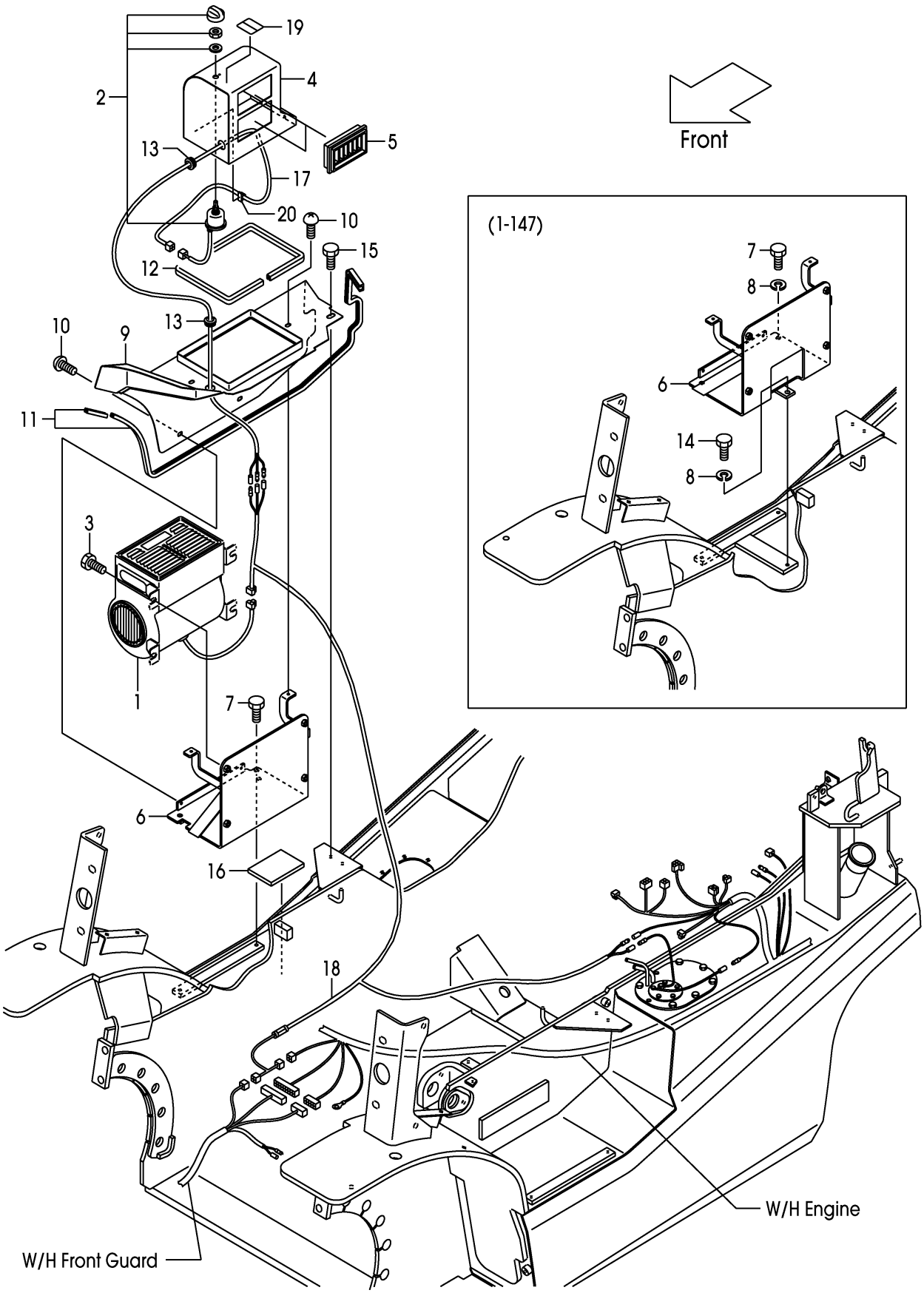

A:FD20C3Z FD20T3Z FD25C3Z FD25T3Z

Item No	Part No.	Mark	Description		Req'd	Remarks : Serial No.
1	52N57-20301		UNIT,HEATER	ﾕﾆｯﾄ	1	[HR]
2	52N57-20311		SWITCH,HEATER	ｽｲｯﾁ	1	[HR]
3	01185-08020		BOLT	ﾎﾞﾙﾄ	4	[HR]
4	52N57-20201		DUCT	ﾀﾞｸﾄ	1	[HR]
5	25369-47031		GRILLE	ｸﾞﾘﾙ	2	[HR]
6	52N57-20221		BRACKET,HEATER	ﾌﾞﾗｹｯﾄ	1	[HR]
7	01100-08020		BOLT	ﾎﾞﾙﾄ	2	1-147
						[HR]
-	01183-08020		BOLT	ﾎﾞﾙﾄ	2	148-
						[HR]
8	02010-00008		WASHER	ﾜｯｼｬ	3	1-147
						[HR]
9	52N57-20211		COVER,HEATER	ｶﾊﾞｰ	1	[HR]
10	214A6-42252		SCREW	ｽｸﾘｭ	4	[HR]
11	222A6-42381		EDGING	ｴｯｼﾞﾝｸﾞ	1	[HR]
12	256C5-12631		SEAL,RUBBER	ｼｰﾙ	1	[HR]
13	221A2-42031		GROMMET	ｸﾞﾛﾒｯﾄ	2	[HR]
14	01100-08016		BOLT	ﾎﾞﾙﾄ	1	1-147
						[HR]
15	01185-08016		BOLT	ﾎﾞﾙﾄ	1	[HR]
16	239B2-42301		RUBBER	ﾗﾊﾞｰ	1	148-
						[HR]
17	52N57-22231		WIRE-HARNESS,SWITCH	ﾜｲﾔﾊｰﾈｽ	1	[HR]
18	52N57-22241		WIRE-HARNESS,HEATER	ﾜｲﾔﾊｰﾈｽ	1	[HR]
19	52N57-22341		DECAL,HEATER-SWITCH	ﾃﾞｶﾙ	1	[HR]
20	27732-42311		CLAMP,HARNESS	ｸﾗﾝﾌﾟ	1	[HR]

FIG.38 HEATER VALVE & ELBOW [HR]

(F7Z224Z0) ﾋｰﾀﾊﾞﾙﾌﾞ&ｴﾙﾎﾞ

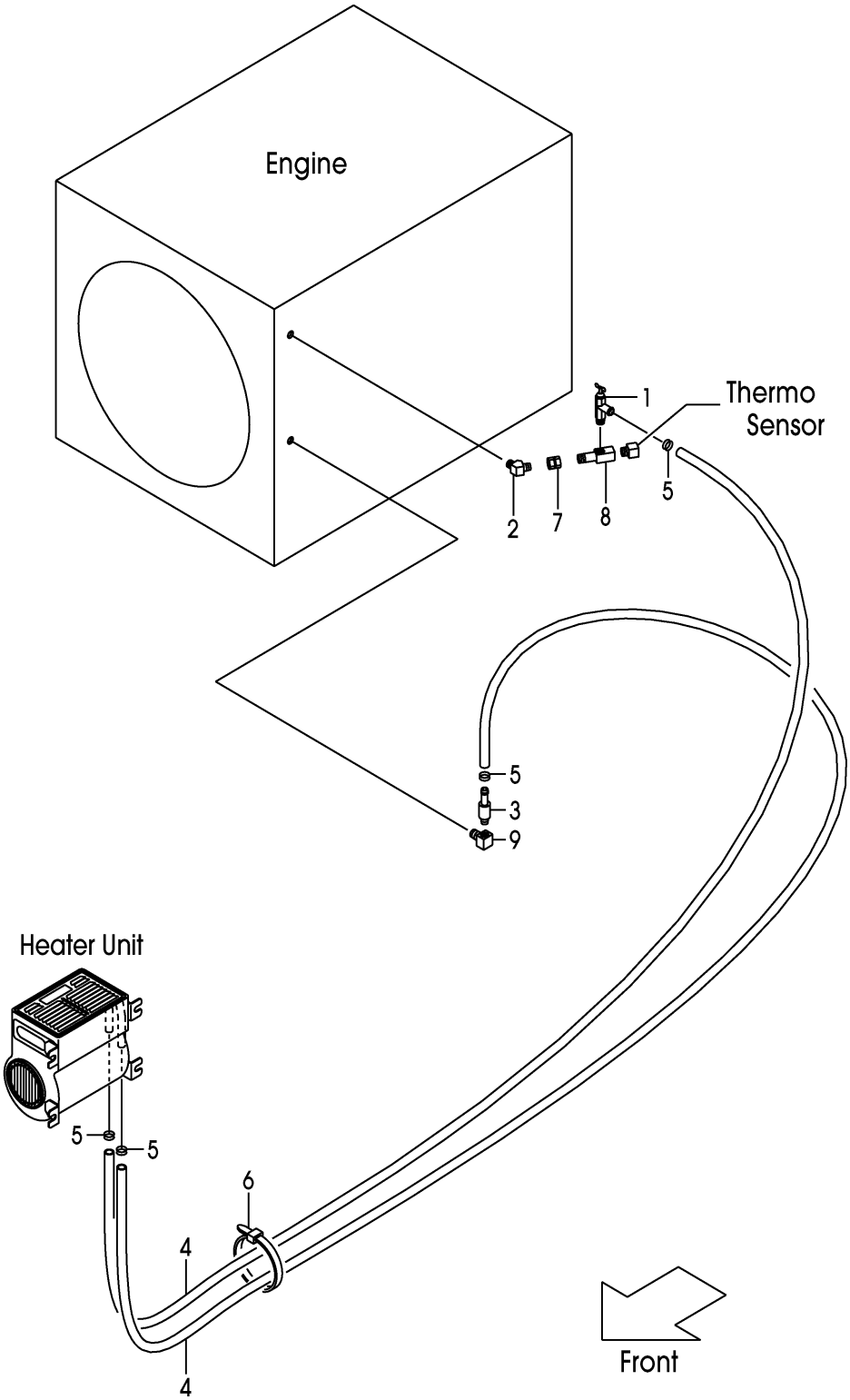

FIG.38

(F7Z224Z0)

A:FD20C3Z FD20T3Z FD25C3Z FD25T3Z

Item No	Part No.	Mark	Description		Req'd	Remarks : Serial No.
1	56110-63521		VALVE,WATER	ﾊﾞﾙﾌﾞ	1	[HR]
2	53130-12091		ELBOW	ｴﾙﾎﾞ	1	[HR]
3	529F7-22001		ADAPTER	ｱﾀﾞﾌﾟﾀ	1	[HR]
4	522A7-22011		HOSE,WATER	ﾎｰｽ	2	[HR]
5	04911-00022		CLIP	ｸﾘｯﾌﾟ	4	[HR]
6	04913-11200		BAND	ﾊﾞﾝﾄﾞ	10	[HR]
7	04138-00303		UNION	ﾕﾆｵﾝ	1	[HR]
8	55597-22111		ELBOW	ｴﾙﾎﾞ	1	[HR]
9	53030-52471		ELBOW	ｴﾙﾎﾞ	1	[HR]

FIG.39 LIFT LOCK VALVE WIRE HARNESS [VLL]

(F7Z22660) ﾘﾌﾄﾛｯｸﾊﾞﾙﾌﾞﾜｲﾔﾊｰﾈｽ

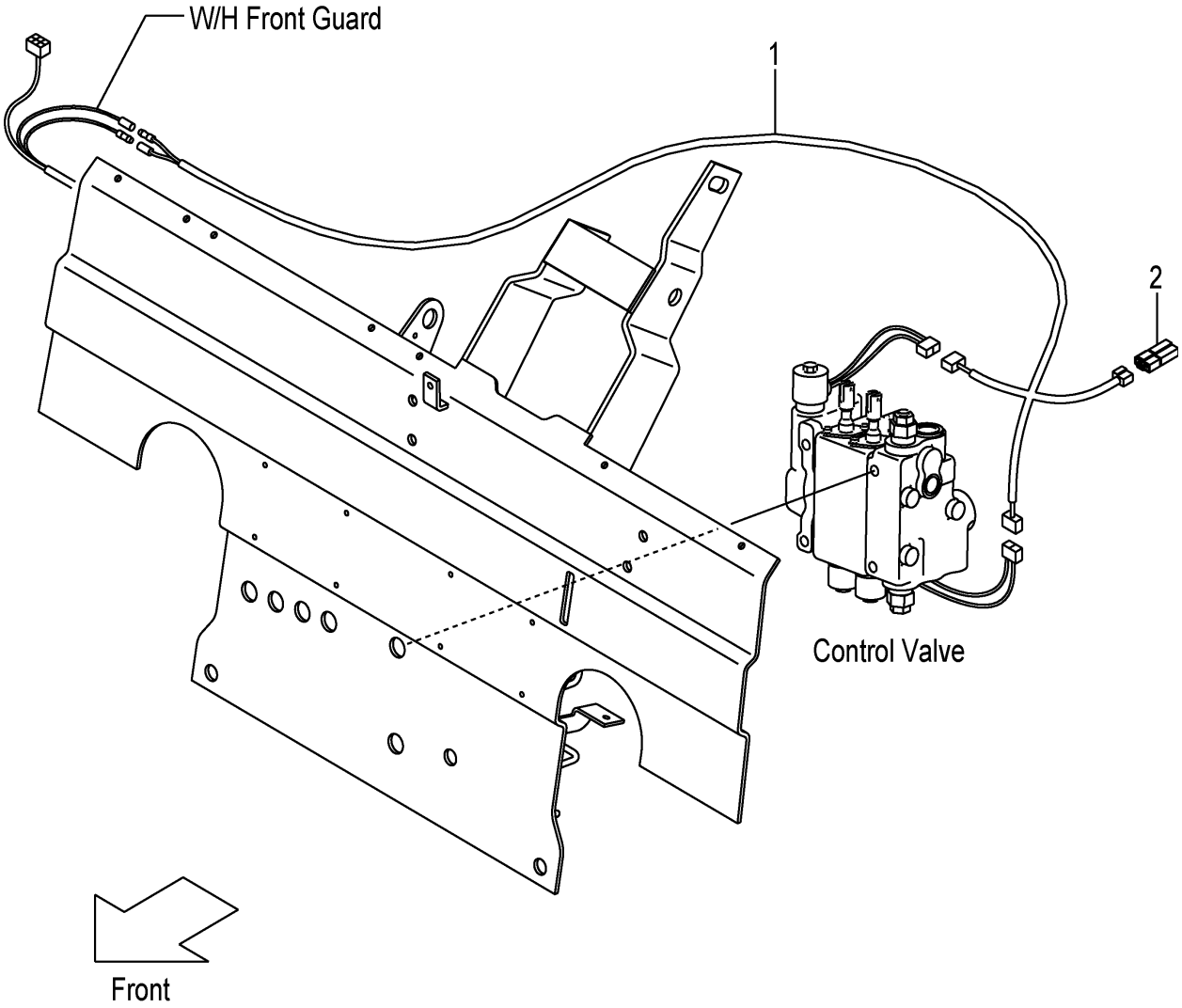

FIG.39

(F7Z22660)

A:FD20C3Z FD20T3Z FD25C3Z FD25T3Z

Item No	Part No.	Mark	Description	Req'd	Remarks : Serial No.
1	52N56-72001		WIRE-HARNESS,VLL ﾜｲﾔﾊｰﾈｽ	1	[VLL](WITHOUT VLL/SIL)
2	230C2-42201		DIODE,3A ﾀﾞｲｵｰﾄﾞ	1	[VLL](WITHOUT VLL/SIL)

FIG.40 FAN [FAN]

(F7Z22650) ファン

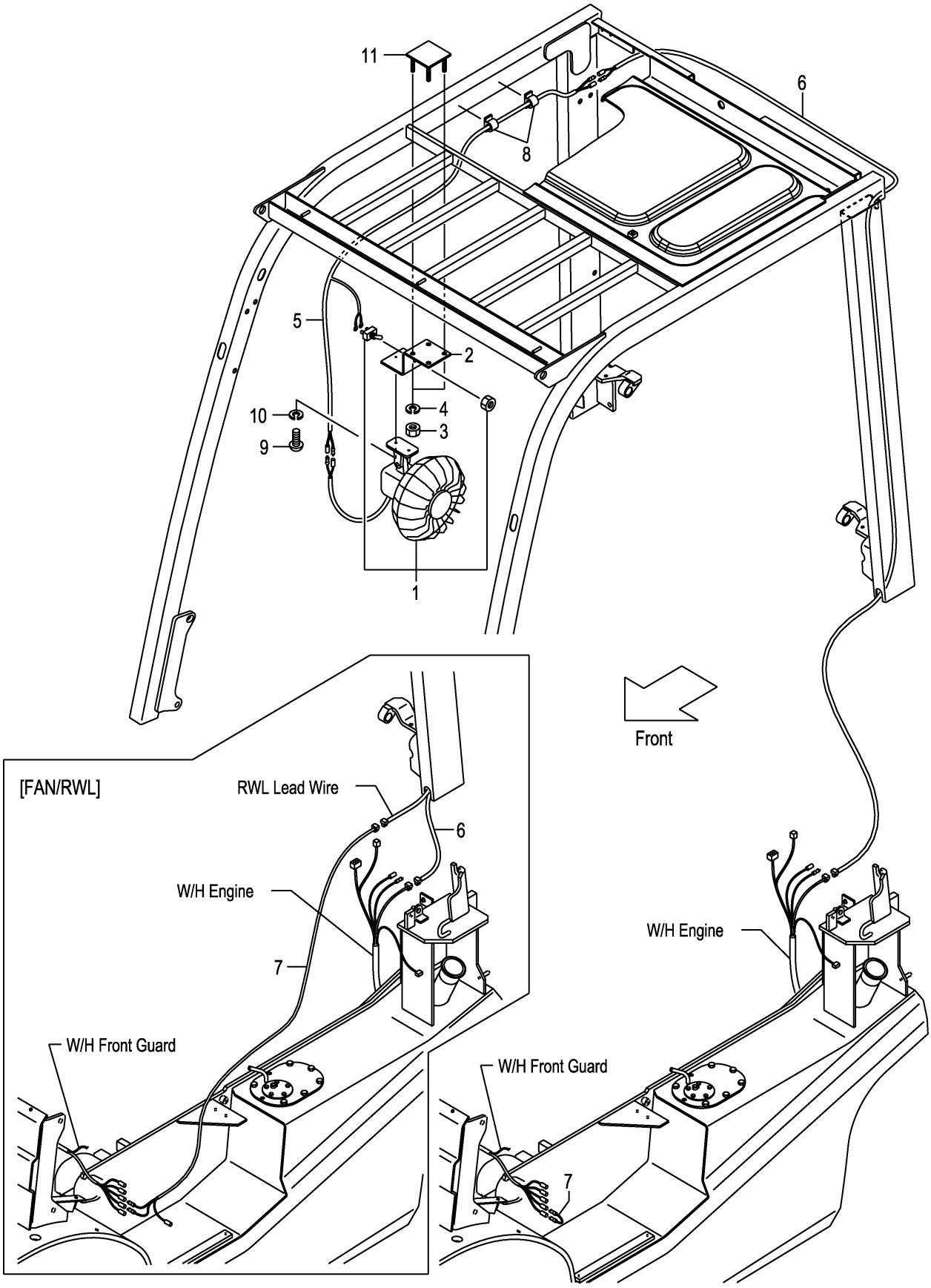

FIG.40

(F7Z22650)

A:FD20C3Z FD20T3Z FD25C3Z FD25T3Z

Item No	Part No.	Mark	Description		Req'd	Remarks : Serial No.
1	514A5-32341		FAN,CAR	ﾌｧﾝ	1	[FAN]
2	52N58-22001		BRACKET,FAN	ﾌﾞﾗｹｯﾄ	1	[FAN](WITHOUT FAN/SCB001)
3	01400-00008		NUT	ﾅｯﾄ	4	[FAN](WITHOUT FAN/SCB001)
4	02010-00008		WASHER	ﾜｯｼｬ	4	[FAN](WITHOUT FAN/SCB001)
5	539A8-22151		WIRE-HARNESS,FAN	ﾜｲﾔﾊｰﾈｽ	1	[FAN](WITHOUT FAN/SCB001)
6	516G1-42111		WIRE,LEAD	ﾜｲﾔ	1	[FAN](WITHOUT FAN/SCB001)
7	516G1-42211		WIRE,LEAD	ﾜｲﾔ	1	[FAN](WITHOUT FAN/SCB001)
-	514A1-42041		WIRE,LEAD	ﾜｲﾔ	1	[FAN/RWL]
8	27732-42311		CLAMP,HARNESS	ｸﾗﾝﾌﾟ	4	[FAN](WITHOUT FAN/SCB001)
9	01030-04014		SCREW	ｽｸﾘｭ	2	[FAN]
10	02010-00004		WASHER	ﾜｯｼｬ	2	[FAN](WITHOUT FAN/SCB001)
11	52N58-22101		BRACKET,FAN	ﾌﾞﾗｹｯﾄ	1	[FAN](WITHOUT FAN/SCB001)

FIG.41 AMMETER [AM]

(F7Z226A0) アンメータ

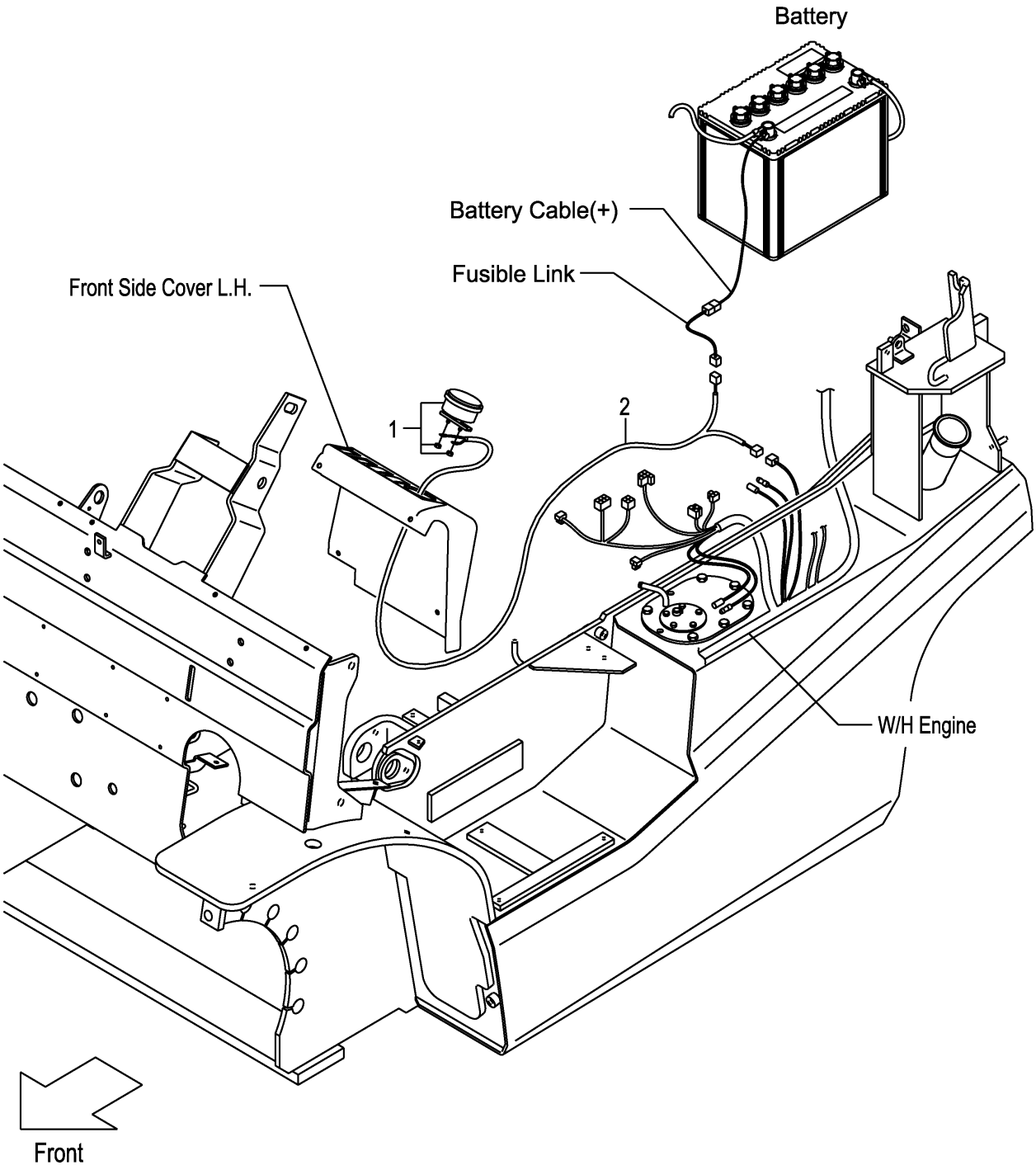

FIG.41

(F7Z226A0)

A:FD20C3Z FD20T3Z FD25C3Z FD25T3Z

Item No	Part No.	Mark	Description	Req'd	Remarks : Serial No.
1	3956323		AMMETER,50A ｱﾝﾒｰﾀ	1	[AM]
2	52N56-12051		WIRE,LEAD,AMMETER ﾜｲﾔ	1	[AM]

FIG.42 SPEED METER [SM]

(F7Z226B0) ｽﾋﾟｰﾄﾞﾒｰﾀ

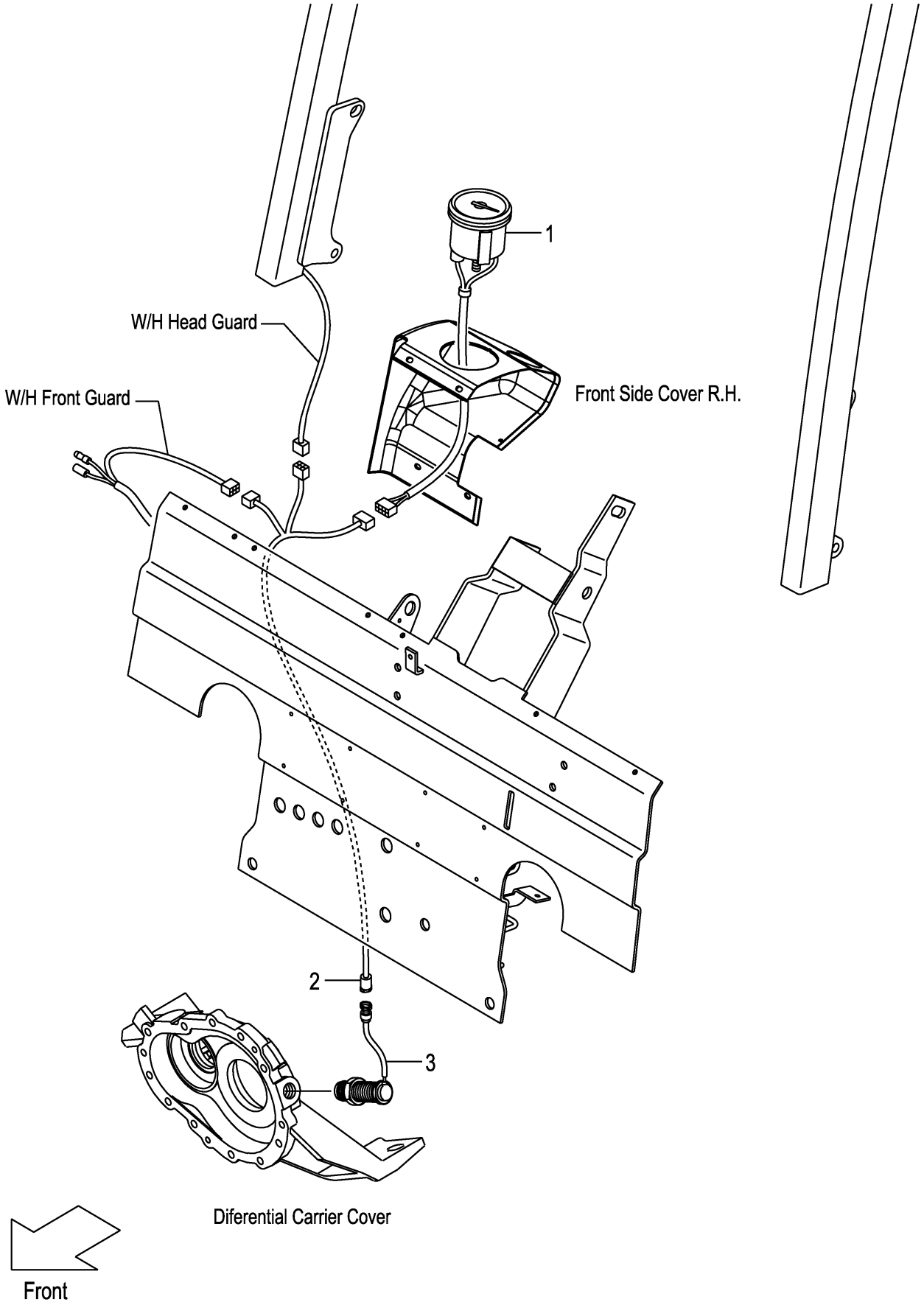

FIG.42

(F7Z226B0)

A:FD20C3Z FD20T3Z FD25C3Z FD25T3Z

Item No	Part No.	Mark	Description		Req'd	Remarks : Serial No.
1	52N57-50101		METER,SPEED	ﾒｰﾀ	1	[SM]
2	52N57-50301		WIRE-HARNESS,SM	ﾜｲﾔﾊｰﾈｽ	1	[SM]
3	16402-54331		SENSOR	ｾﾝｻ	1	[SM]

FIG.43 TORQUE CONVERTER THERMOMETER [TTM]

(F7Z226C0) トルクコンバータサーモメータ

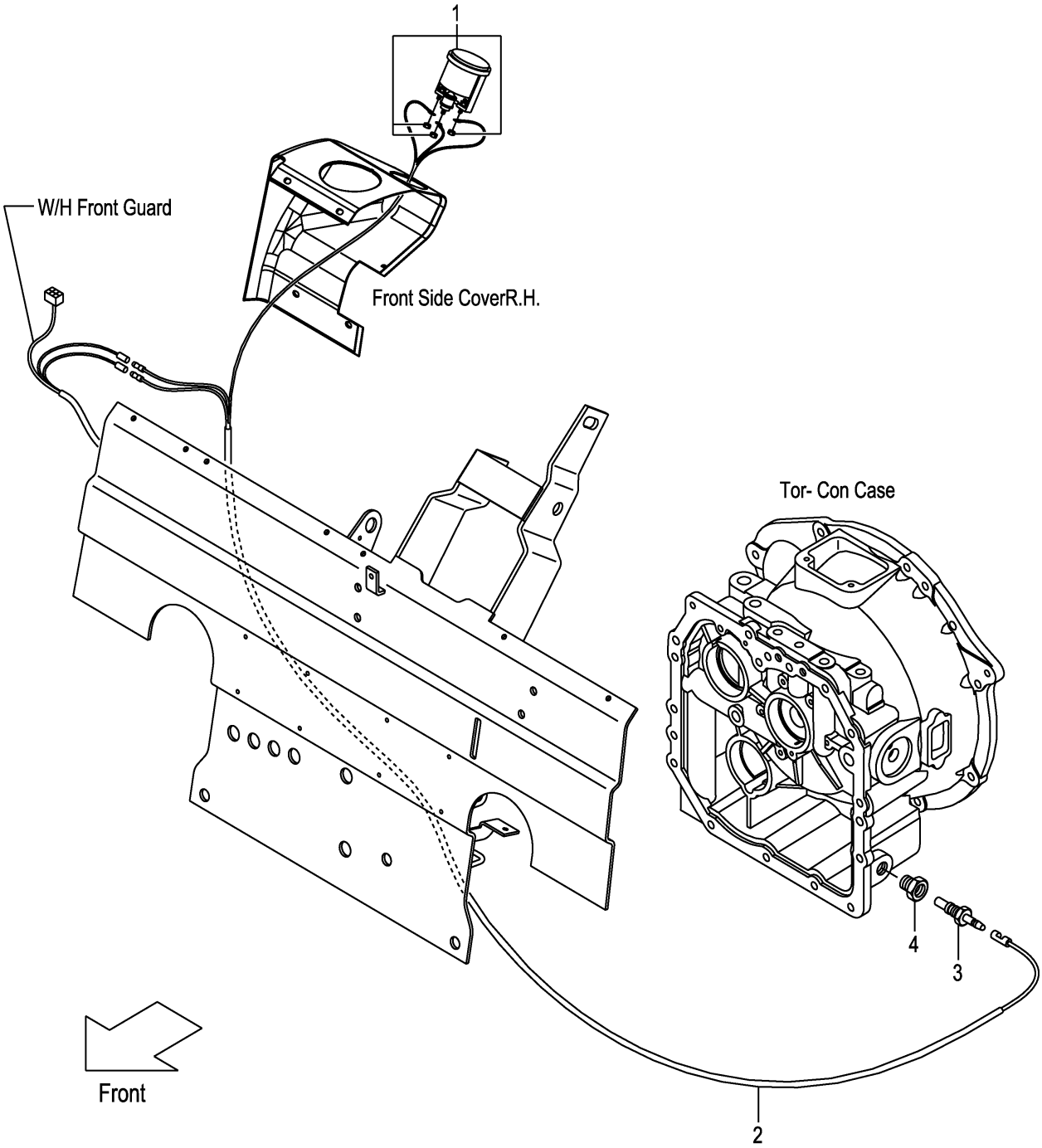

FIG.43
(F7Z226C0)

A:FD20T3Z FD25T3Z

Item No	Part No.	Mark	Description		Req'd	Remarks : Serial No.
1	52N58-82001		THERMOMETER	ｻｰﾓﾒｰﾀ	1	[TTM]
2	52N58-82101		WIRE-HARNESS,TTM	ﾜｲﾔﾊｰﾈｽ	1	[TTM]
3	23652-44001		UNIT,SENDING	ﾕﾆｯﾄ	1	[TTM]
4	521A2-42061		ADAPTER,THERMO-SW.	ｱﾀﾞﾌﾟﾀ	1	[TTM]

FIG.44 TORQUE CONVERTER PRESSURE METER [TPM]

(F7Z226D0) トルクコンバータプレッシャメータ

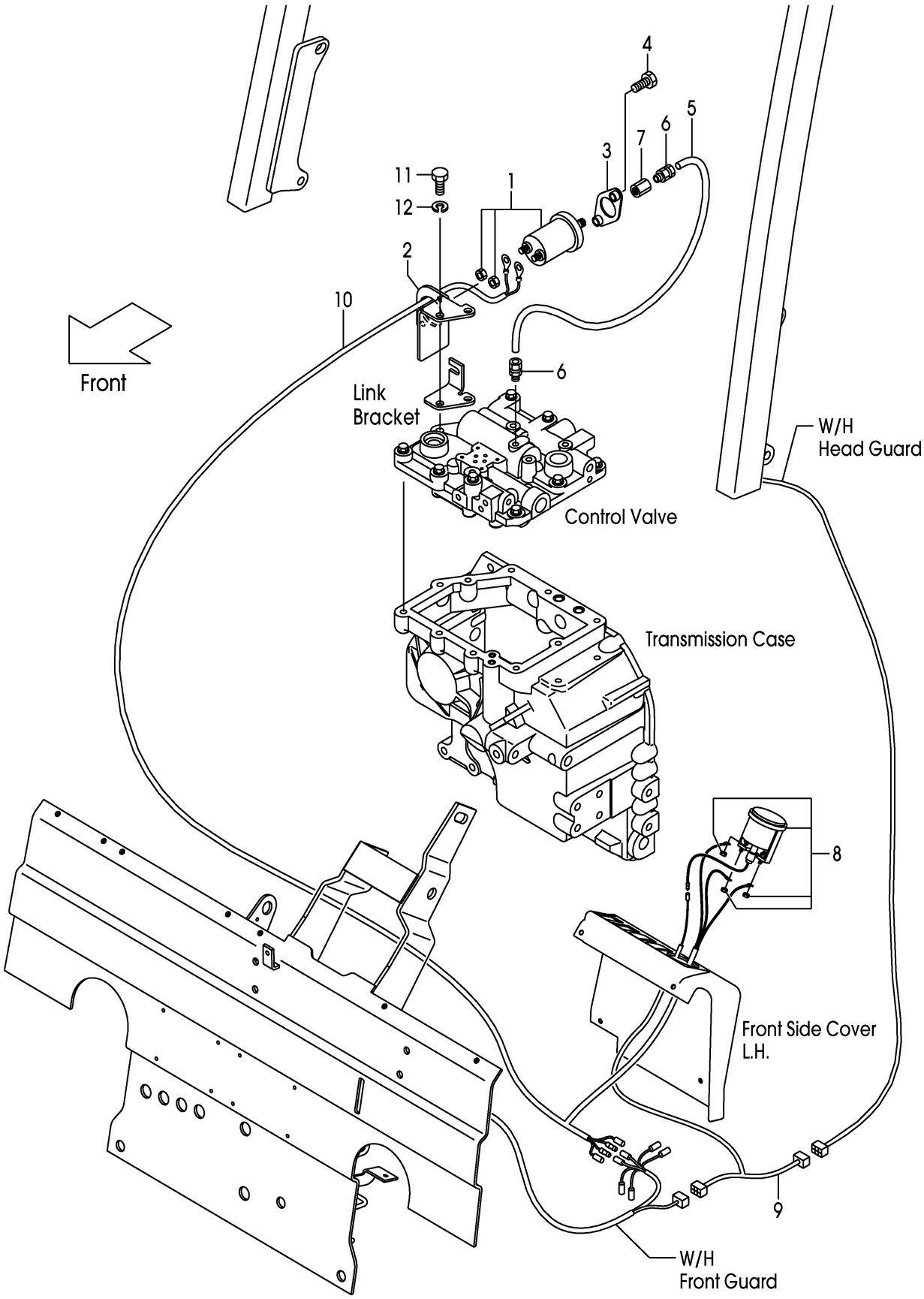

FIG.44
(F7Z226D0)

A:FD20T3Z FD25T3Z

Item No	Part No.	Mark	Description		Req'd	Remarks : Serial No.
1	516G6-92001		SENSOR,PRESS.GAUGE	ｾﾝｻ	1	[TPM]
2	52N56-92101		BRACKET,SENSOR	ﾌﾞﾗｹｯﾄ	1	[TPM]
3	516G6-92151		COVER,SENSOR	ｶﾊﾞｰ	1	[TPM]
4	01185-08025		BOLT	ﾎﾞﾙﾄ	2	[TPM]
5	52N56-92001		PIPE,CAPPER	ﾊﾟｲﾌﾟ	1	[TPM]
6	516G6-92011		JOINT	ｼﾞｮｲﾝﾄ	2	[TPM]
7	516G6-92031		ADAPTER	ｱﾀﾞﾌﾟﾀ	1	[TPM]
8	516G6-92022		GAUGE,PRESSURE	ｹﾞｰｼﾞ	1	[TPM]
9	52N56-92211		WIRE-HARNESS	ﾜｲﾔﾊｰﾈｽ	1	[TPM]
10	52N56-92201		WIRE-HARNESS,TPM	ﾜｲﾔﾊｰﾈｽ	1	[TPM]
11	01103-10035		BOLT	ﾎﾞﾙﾄ	2	[TPM]
12	02011-00010		WASHER	ﾜｯｼｬ	2	[TPM]

FIG.45 SPEED DETECTOR UNIT [SAS]

(F7Z226E0) ｽﾋﾟｰﾄﾞﾃﾞｨﾃｸﾀﾕﾆｯﾄ

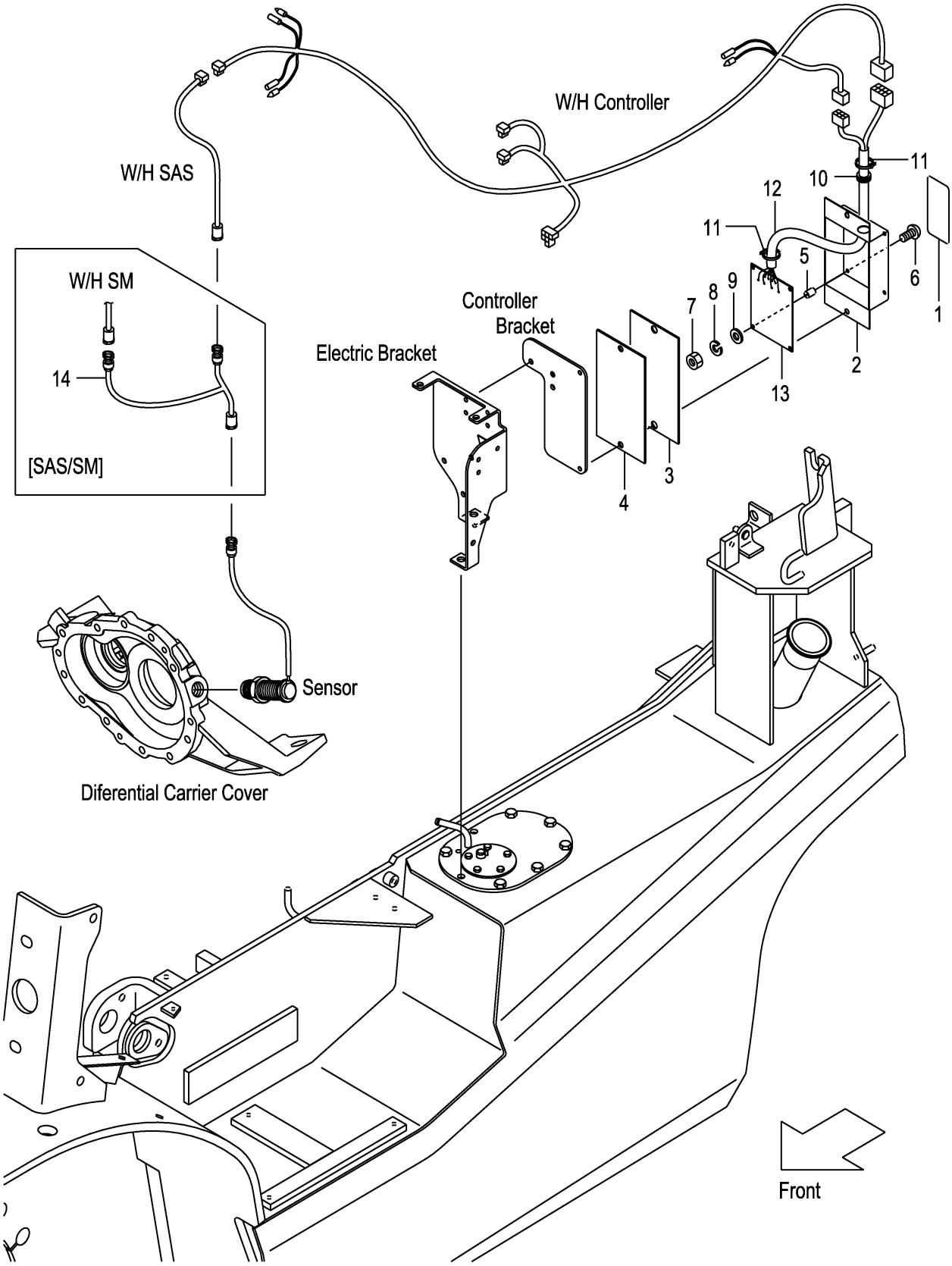

FIG.45
(F7Z226E0)

A:FD20C3Z FD20T3Z FD25C3Z FD25T3Z

Item No	Part No.	Mark	Description	Req'd	Remarks : Serial No.
A1	52N57-52051		UNIT-ASSY,SPEED-DETECTOR ｽﾋﾟｰﾄﾞﾃﾞｨﾃｸﾀﾕﾆｯﾄｱｯｾﾝ	1	[SASB05][SASR05][SASC05] INC.1-13
-	52N57-52101		UNIT-ASSY,SPEED-DETECTOR ｽﾋﾟｰﾄﾞﾃﾞｨﾃｸﾀﾕﾆｯﾄｱｯｾﾝ	1	[SASB10][SASR10][SASC10] INC.1-13
-	52N57-52151		UNIT-ASSY,SPEED-DETECTOR ｽﾋﾟｰﾄﾞﾃﾞｨﾃｸﾀﾕﾆｯﾄｱｯｾﾝ	1	[SASB15][SASR15][SASC15] INC.1-13
1	52N57-52061		PLATE,NAME ﾌﾟﾚｰﾄ	1	[SASB05][SASR05][SASC05]
-	52N57-52111		PLATE,NAME ﾌﾟﾚｰﾄ	1	[SASB10][SASR10][SASC10]
-	52N57-52161		PLATE,NAME ﾌﾟﾚｰﾄ	1	[SASB15][SASR15][SASC15]
2	55792-52601		CASE ｹｰｽ	1	[SASB05&10&15][SASR05&10&15] [SASC05&10&15]
3	55792-52611		SEAT,SPONG ｼｰﾄ	1	[SASB05&10&15][SASR05&10&15] [SASC05&10&15]
4	55792-52621		PLATE ﾌﾟﾚｰﾄ	1	[SASB05&10&15][SASR05&10&15] [SASC05&10&15]
5	27042-64311		SPACER ｽﾍﾟｰｻ	4	[SASB05&10&15][SASR05&10&15] [SASC05&10&15]
6	01030-04020		SCREW ｽｸﾘｭ	4	[SASB05&10&15][SASR05&10&15] [SASC05&10&15]
7	01400-00004		NUT ﾅｯﾄ	4	[SASB05&10&15][SASR05&10&15] [SASC05&10&15]
8	02010-00004		WASHER ﾜｯｼｬ	4	[SASB05&10&15][SASR05&10&15] [SASC05&10&15]
9	02000-00004		WASHER ﾜｯｼｬ	4	[SASB05&10&15][SASR05&10&15] [SASC05&10&15]
10	205A2-63311		GROMMET ｸﾞﾛﾒｯﾄ	1	[SASB05&10&15][SASR05&10&15] [SASC05&10&15]
11	27042-42312		BAND,CABLE ﾊﾞﾝﾄﾞ	2	[SASB05&10&15][SASR05&10&15] [SASC05&10&15]
12	55792-52641		WIRE-HARNESS,ATC ﾜｲﾔﾊｰﾈｽ	1	[SASB05&10&15][SASR05&10&15] [SASC05&10&15]
13	130C2-60302		BOARD,PRINTED ﾎﾞｰﾄﾞ	1	[SASB05&10&15][SASR05&10&15] [SASC05&10&15]
14	539A7-52041		WIRE-HARNESS,SAS/SM ﾜｲﾔﾊｰﾈｽ	1	[SAS/SM]

FIG.46 SPEED ALARM SYSTEM [SASB]

(F7Z226F0) ｽﾋﾟｰﾄﾞｱﾗｰﾑｼｽﾃﾑ

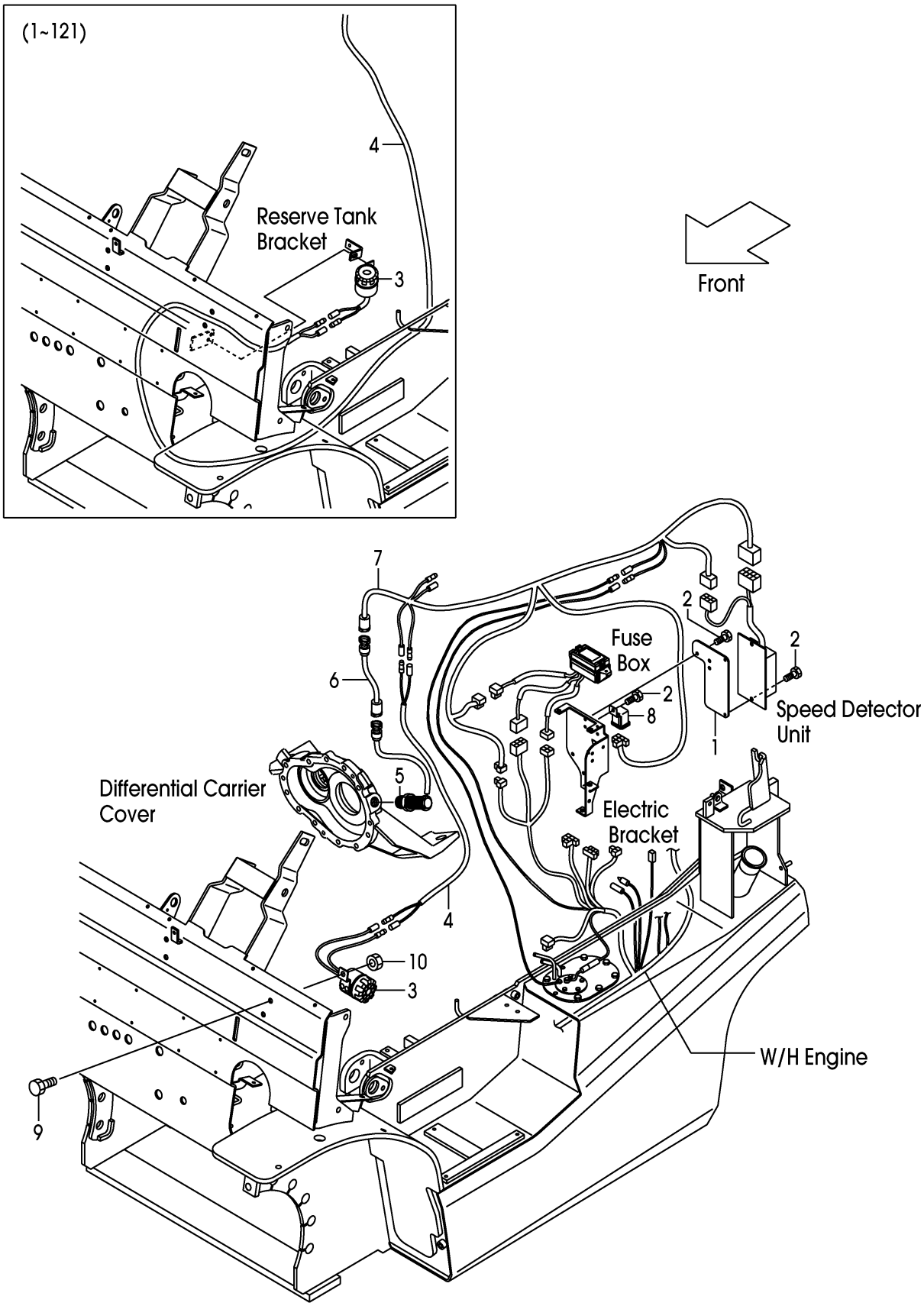

A:FD20C3Z FD20T3Z FD25C3Z FD25T3Z

Item No	Part No.	Mark	Description		Req'd	Remarks : Serial No.
1	52N57-52001		BRACKET,CONTROLLER	ﾌﾞﾗｹｯﾄ	1	[SASB05][SASB10][SASB15]
2	214A2-42621		SCREW	ｽｸﾘｭ	6	[SASB05][SASB10][SASB15]
3	529F7-52241		ALARM,BUZZER	ｱﾗｰﾑ	1	[SASB05][SASB10][SASB15]
4	558A9-92001		WIRE-HARNESS,LICENSE	ﾜｲﾔﾊｰﾈｽ	1	[SASB05][SASB10][SASB15]
5	16402-54331		SENSOR	ｾﾝｻ	1	[SASB05][SASB10][SASB15]
6	534A7-50601		WIRE-HARNESS,SAS	ﾜｲﾔﾊｰﾈｽ	1	[SASB05][SASB10][SASB15]
7	52N57-52031		WIRE-HARNESS,CONTROL	ﾜｲﾔﾊｰﾈｽ	1	[SASB05][SASB10][SASB15] (-2006.4.2)
-	52N57-52032		WIRE-HARNESS,CONTROL	ﾜｲﾔﾊｰﾈｽ	1	[SASB05][SASB10][SASB15] (2006.4.3-)
8	26062-42881		RELAY,12V	ﾘﾚｰ	1	[SASB05][SASB10][SASB15] (-2006.4.2)
-	209K2-42351		RELAY,12V	ﾘﾚｰ	1	[SASB05][SASB10][SASB15] (2006.4.3-)
9	514A5-12021		BOLT	ﾎﾞﾙﾄ	1	122- [SASB05][SASB10][SASB15]
10	01400-00008		NUT	ﾅｯﾄ	1	122- [SASB05][SASB10][SASB15]

FIG.47 SPEED ALARM SYSTEM [SASR]

(F7Z226G0) ｽﾋﾟｰﾄﾞｱﾗｰﾑｼｽﾃﾑ

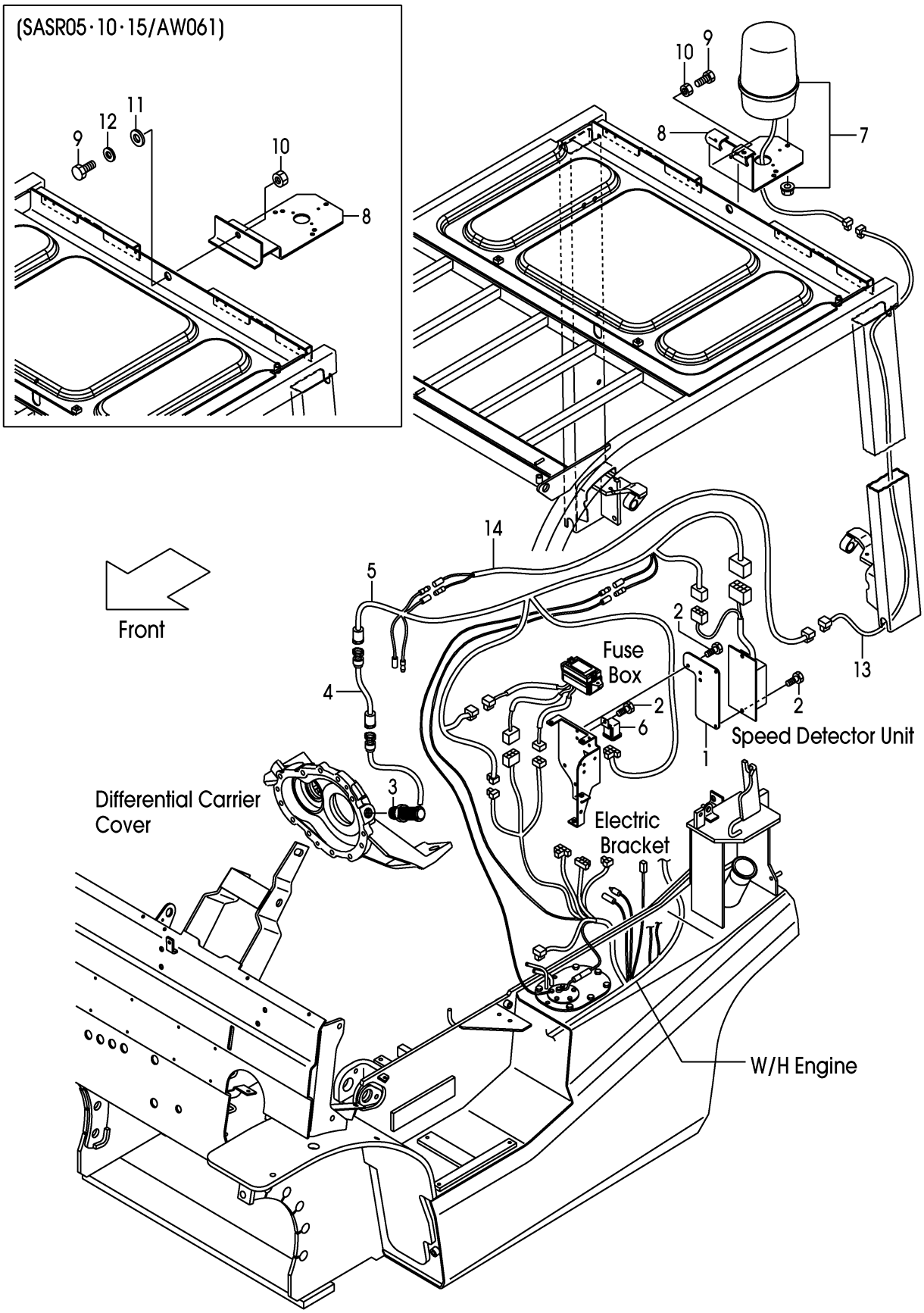

FIG.47
(F7Z226G0)

A:FD20C3Z FD20T3Z FD25C3Z FD25T3Z

Item No	Part No.	Mark	Description		Req'd	Remarks : Serial No.
1	52N57-52001		BRACKET,CONTROLLER	ﾌﾞﾗｹｯﾄ	1	[SASR05][SASR10][SASR15]
2	214A2-42621		SCREW	ｽｸﾘｭ	6	[SASR05][SASR10][SASR15]
3	16402-54331		SENSOR	ｾﾝｻ	1	[SASR05][SASR10][SASR15]
4	534A7-50601		WIRE-HARNESS,SAS	ﾜｲﾔﾊｰﾈｽ	1	[SASR05][SASR10][SASR15]
5	52N57-52031		WIRE-HARNESS,CONTROL	ﾜｲﾔﾊｰﾈｽ	1	[SASR05][SASR10][SASR15] (-2006.4.2)
-	52N57-52032		WIRE-HARNESS,CONTROL	ﾜｲﾔﾊｰﾈｽ	1	[SASR05][SASR10][SASR15] (2006.4.3-)
6	26062-42881		RELAY,12V	ﾘﾚｰ	1	[SASR05][SASR10][SASR15] (-2006.4.2)
-	209K2-42351		RELAY,12V	ﾘﾚｰ	1	[SASR05][SASR10][SASR15] (2006.4.3-)
7	514A1-41001		LIGHT,REVOLVING	ﾗｲﾄ	1	[SASR05][SASR10][SASR15]
8	529F1-42251		BRACKET,REVOLVING	ﾌﾞﾗｹｯﾄ	1	[SASR05][SASR10][SASR15]
-	50A78-92201		BRACKET,REVOLVING	ﾌﾞﾗｹｯﾄ	1	[SASR05/AW061][SASR10/AW061] [SASR15/AW061]
9	01100-08020		BOLT	ﾎﾞﾙﾄ	3	[SASR05][SASR10][SASR15]
-	01186-12030		BOLT	ﾎﾞﾙﾄ	1	[SASR05/AW061][SASR10/AW061] [SASR15/AW061]
10	01400-00008		NUT	ﾅｯﾄ	3	[SASR05][SASR10][SASR15]
-	01400-00012		NUT	ﾅｯﾄ	1	[SASR05/AW061][SASR10/AW061] [SASR15/AW061]
11	02000-00014		WASHER	ﾜｯｼｬ	1	[SASR05/AW061][SASR10/AW061] [SASR15/AW061]
12	02000-00012		WASHER	ﾜｯｼｬ	1	[SASR05/AW061][SASR10/AW061] [SASR15/AW061]
13	52N58-92021		WIRE,LEAD	ﾜｲﾔ	1	[SASR05][SASR10][SASR15]
14	539A7-52101		WIRE,LEAD	ﾜｲﾔ	1	[SASR05][SASR10][SASR15]

FIG.48 SPEED ALARM SYSTEM [SASC]

(F7Z226H0) スピードアラームシステム

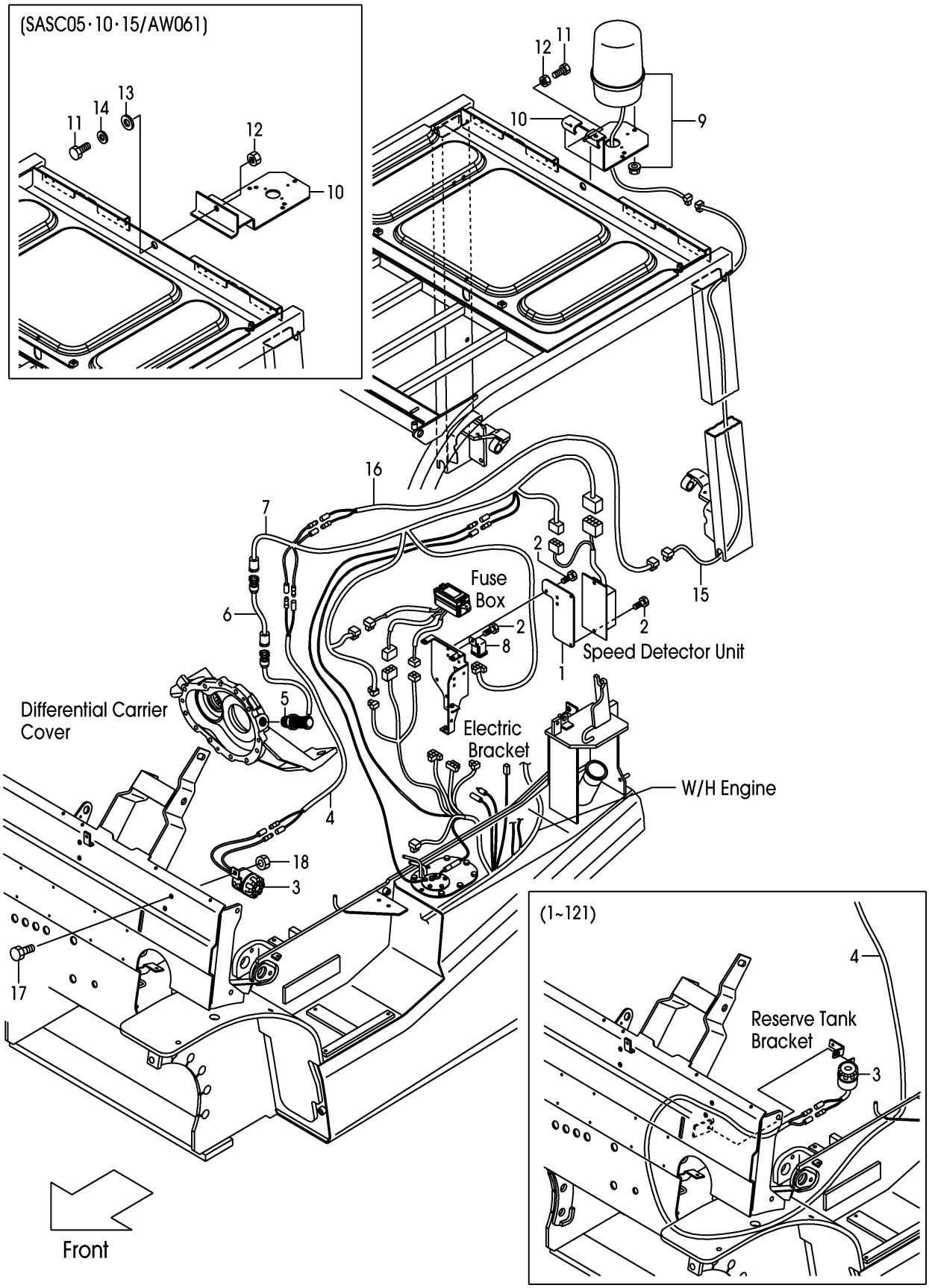

A:FD20C3Z FD20T3Z FD25C3Z FD25T3Z

Item No	Part No.	Mark	Description		Req'd	Remarks : Serial No.
1	52N57-52001		BRACKET,CONTROLLER	ﾌﾞﾗｹｯﾄ	1	[SASC05][SASC10][SASC15]
2	214A2-42621		SCREW	ｽｸﾘｭ	6	[SASC05][SASC10][SASC15]
3	529F7-52241		ALARM,BUZZER	ｱﾗｰﾑ	1	[SASC05][SASC10][SASC15]
4	558A9-92001		WIRE-HARNESS,LICENSE	ﾜｲﾔﾊｰﾈｽ	1	[SASC05][SASC10][SASC15]
5	16402-54331		SENSOR	ｾﾝｻ	1	[SASC05][SASC10][SASC15]
6	534A7-50601		WIRE-HARNESS,SAS	ﾜｲﾔﾊｰﾈｽ	1	[SASC05][SASC10][SASC15]
7	52N57-52031		WIRE-HARNESS,CONTROL	ﾜｲﾔﾊｰﾈｽ	1	[SASC05][SASC10][SASC15] (-2006.4.2)
-	52N57-52032		WIRE-HARNESS,CONTROL	ﾜｲﾔﾊｰﾈｽ	1	[SASC05][SASC10][SASC15] (2006.4.3-)
8	26062-42881		RELAY,12V	ﾘﾚｰ	1	[SASC05][SASC10][SASC15] (-2006.4.2)
-	209K2-42351		RELAY,12V	ﾘﾚｰ	1	[SASC05][SASC10][SASC15] (2006.4.3-)
9	514A1-41001		LIGHT,REVOLVING	ﾗｲﾄ	1	[SASC05][SASC10][SASC15]
10	529F1-42251		BRACKET,REVOLVING	ﾌﾞﾗｹｯﾄ	1	[SASC05][SASC10][SASC15]
-	50A78-92201		BRACKET,REVOLVING	ﾌﾞﾗｹｯﾄ	1	[SASC05/AW061][SASC10/AW061] [SASC15/AW061]
11	01100-08020		BOLT	ﾎﾞﾙﾄ	3	[SASC05][SASC10][SASC15]
-	01186-12030		BOLT	ﾎﾞﾙﾄ	1	[SASC05/AW061][SASC10/AW061] [SASC15/AW061]
12	01400-00008		NUT	ﾅｯﾄ	3	[SASC05][SASC10][SASC15]
-	01400-00012		NUT	ﾅｯﾄ	1	[SASC05/AW061][SASC10/AW061] [SASC15/AW061]
13	02000-00014		WASHER	ﾜｯｼｬ	1	[SASC05/AW061][SASC10/AW061] [SASC15/AW061]
14	02000-00012		WASHER	ﾜｯｼｬ	1	[SASC05/AW061][SASC10/AW061] [SASC15/AW061]
15	52N58-92021		WIRE,LEAD	ﾜｲﾔ	1	[SASC05][SASC10][SASC15]
16	539A7-52101		WIRE,LEAD	ﾜｲﾔ	1	[SASC05][SASC10][SASC15]
17	514A5-12021		BOLT	ﾎﾞﾙﾄ	1	122- [SASC05][SASC10][SASC15]
18	01400-00008		NUT	ﾅｯﾄ	1	122- [SASC05][SASC10][SASC15]

FIG.49 OK MONITOR [OKM]

(F7Z226J0) **OKモニタ**

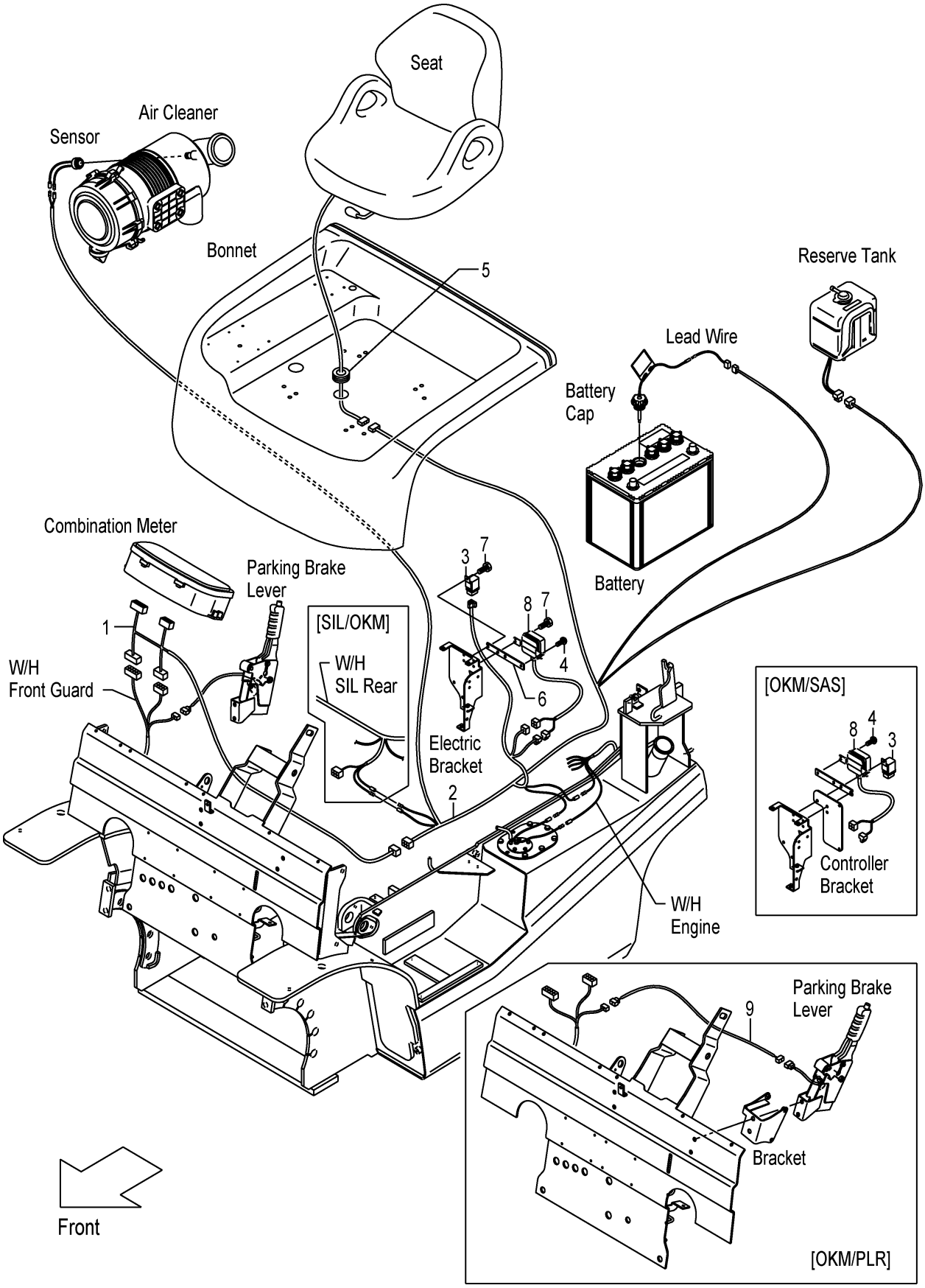

FIG.49

(F7Z226J0)

A:FD20C3Z FD20T3Z FD25C3Z FD25T3Z

Item No	Part No.	Mark	Description		Req'd	Remarks : Serial No.
1	52N56-22021		WIRE,LEAD,OKM	ﾜｲﾔ	1	[OKM]
2	52N56-22012		WIRE-HARNESS,OKM	ﾜｲﾔﾊｰﾈｽ	1	[OKM]
3	247C2-43501		RELAY,1C	ﾘﾚｰ	1	[OKM]
4	214A2-42611		SCREW	ｽｸﾘｭ	1	[OKM]
5	27682-62131		GROMMET	ｸﾞﾛﾒｯﾄ	1	[OKM]
6	52N56-22101		BRACKET,MODULE	ﾌﾞﾗｹｯﾄ	1	[OKM]
7	214A2-42621		SCREW	ｽｸﾘｭ	2	[OKM]
8	229F2-42161		MODULE,WARNING	ﾓｼﾞｭｰﾙ	1	[OKM]
9	52N56-22401		WIRE-HARNESS,SWITCH	ﾜｲﾔﾊｰﾈｽ	1	[OKM/PLR]

FIG.50 INTERLOCK (CLUTCH):[SIL]

(F7Z226M0) インターロック

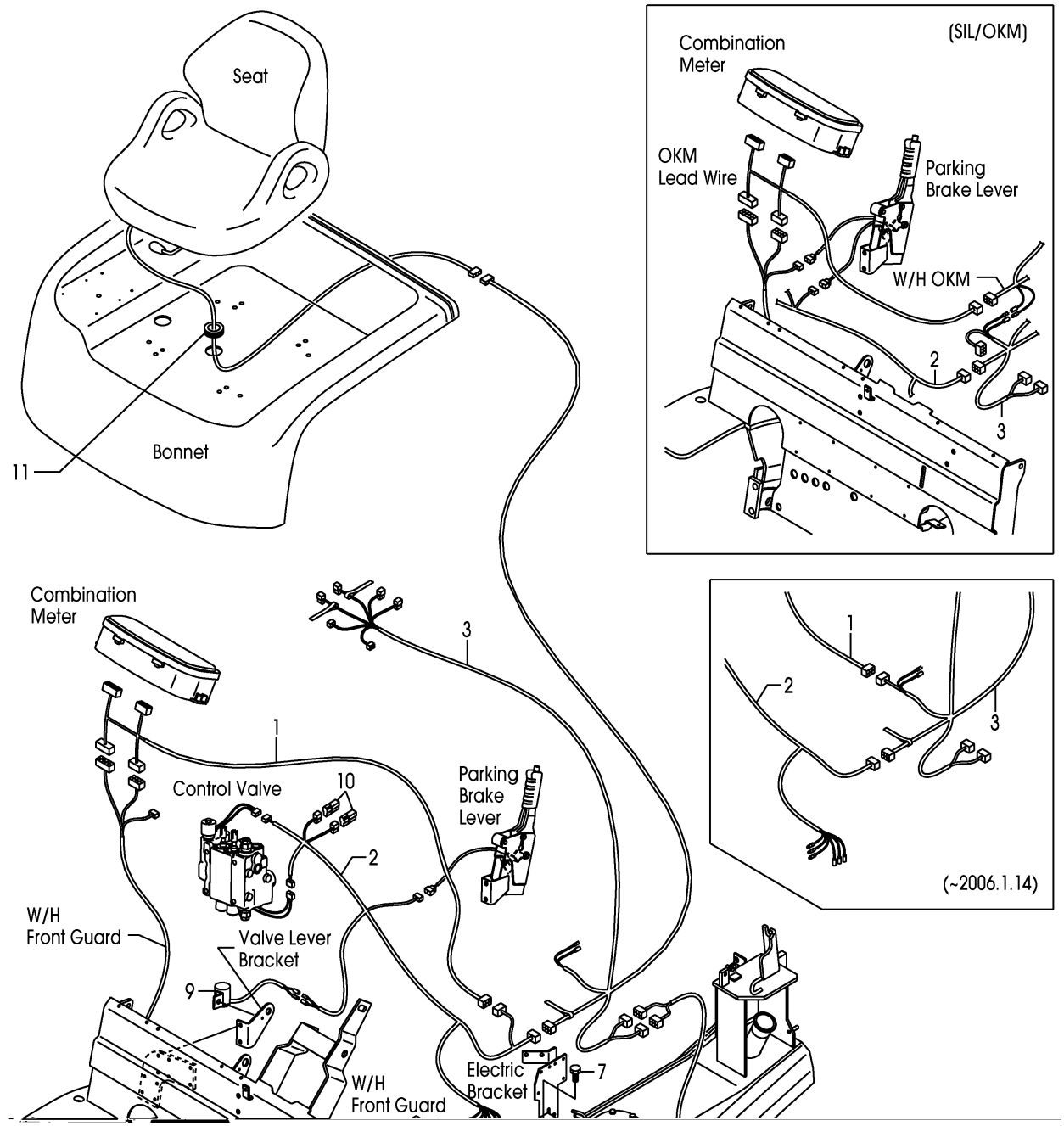

A:FD20C3Z FD25C3Z

Item No	Part No.	Mark	Description		Req'd	Remarks : Serial No.
1	52N56-22021		WIRE,LEAD,OKM	ﾜｲﾔ	1	[SIL](WITHOUT SIL/OKM)
2	52N57-E2001		WIRE-HARNESS,SIL,F	ﾜｲﾔﾊｰﾈｽ	1	[SIL](-2006.1.14)
-	52N57-E2002		WIRE-HARNESS,SIL,F	ﾜｲﾔﾊｰﾈｽ	1	[SIL](2006.1.15-)
3	52N57-E2011		WIRE-HARNESS,SIL,R	ﾜｲﾔﾊｰﾈｽ	1	[SIL](-2006.1.14)
-	52N57-E2012		WIRE-HARNESS,SIL,R	ﾜｲﾔﾊｰﾈｽ	1	[SIL](2006.1.15-)
4	209K2-42351		RELAY,1A	ﾘﾚｰ	1	[SIL]
5	214A2-42611		SCREW	ｽｸﾘｭ	3	[SIL]
6	52N57-E2201		BRACKET,RELAY	ﾌﾞﾗｹｯﾄ	1	[SIL]
7	01185-08025		BOLT	ﾎﾞﾙﾄ	1	[SIL]
8	247C2-43301		TIMER	ﾀｲﾏ	1	[SIL]
9	247C2-43601		BUZZER	ﾌﾞｻﾞｰ	1	[SIL]
10	230C2-42201		DIODE,3A	ﾀﾞｲｵｰﾄﾞ	2	[SIL]
11	27682-62131		GROMMET	ｸﾞﾛﾒｯﾄ	1	[SIL]
12	246B2-43221		WIRE,LEAD,SIL	ﾜｲﾔ	1	[SIL]
13	01400-00008		NUT	ﾅｯﾄ	1	[SIL]
14	02010-00008		WASHER	ﾜｯｼｬ	1	[SIL]

FIG.51 INTERLOCK (TOR-CON):[SIL]

(F7Z226N0) インターロック

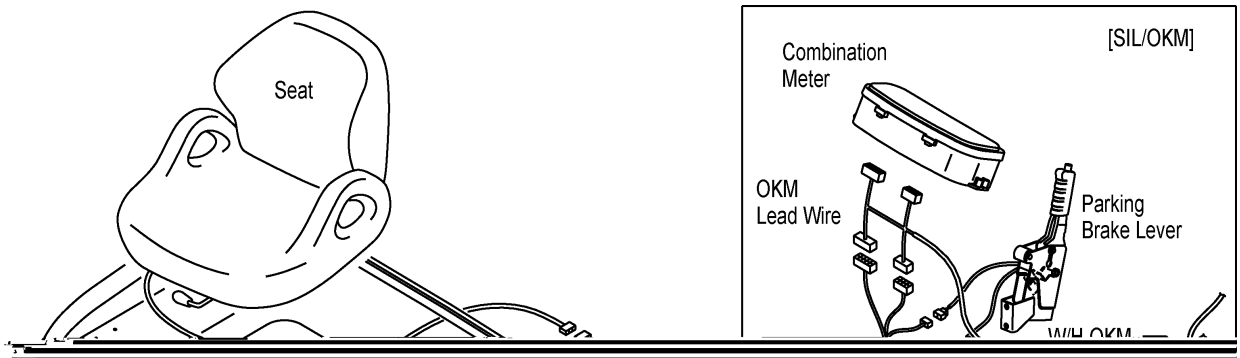

FIG.51

(F7Z226N0)

A:FD20T3Z FD25T3Z

Item No	Part No.	Mark	Description		Req'd	Remarks : Serial No.
1	52N56-22021		WIRE,LEAD,OKM	ﾜｲﾔ	1	[SIL](WITHOUT SIL/OKM) (-2006.1.14)
2	52N57-E2001		WIRE-HARNESS,SIL,F	ﾜｲﾔﾊｰﾈｽ	1	[SIL](-2006.1.14)
3	52N57-E2011		WIRE-HARNESS,SIL,R	ﾜｲﾔﾊｰﾈｽ	1	[SIL](-2006.1.14)
4	209K2-42351		RELAY,1A	ﾘﾚｰ	3	[SIL](-2006.1.14)
5	214A2-42611		SCREW	ｽｸﾘｭ	5	[SIL](-2006.1.14)
6	52N57-E2201		BRACKET,RELAY	ﾌﾞﾗｹｯﾄ	1	[SIL](-2006.1.14)
7	01185-08025		BOLT	ﾎﾞﾙﾄ	1	[SIL](-2006.1.14)
8	247C2-43501		RELAY,1C	ﾘﾚｰ	1	[SIL](-2006.1.14)
9	247C2-43301		TIMER	ﾀｲﾏ	1	[SIL](-2006.1.14)
10	21152-42091		DIODE,1A	ﾀﾞｲｵｰﾄﾞ	2	[SIL](-2006.1.14)
11	247C2-43601		BUZZER	ﾌﾞｻﾞｰ	1	[SIL](-2006.1.14)
12	230C2-42201		DIODE,3A	ﾀﾞｲｵｰﾄﾞ	4	[SIL](-2006.1.14)
13	27682-62131		GROMMET	ｸﾞﾛﾒｯﾄ	1	[SIL](-2006.1.14)
14	246B2-43221		WIRE,LEAD,SIL	ﾜｲﾔ	1	[SIL](-2006.1.14)
15	01400-00008		NUT	ﾅｯﾄ	1	[SIL](-2006.1.14)
16	02010-00008		WASHER	ﾜｯｼｬ	1	[SIL](-2006.1.14)

FIG.51A INTERLOCK (TOR-CON):[SIL]

(F7Z226N1) インターロック

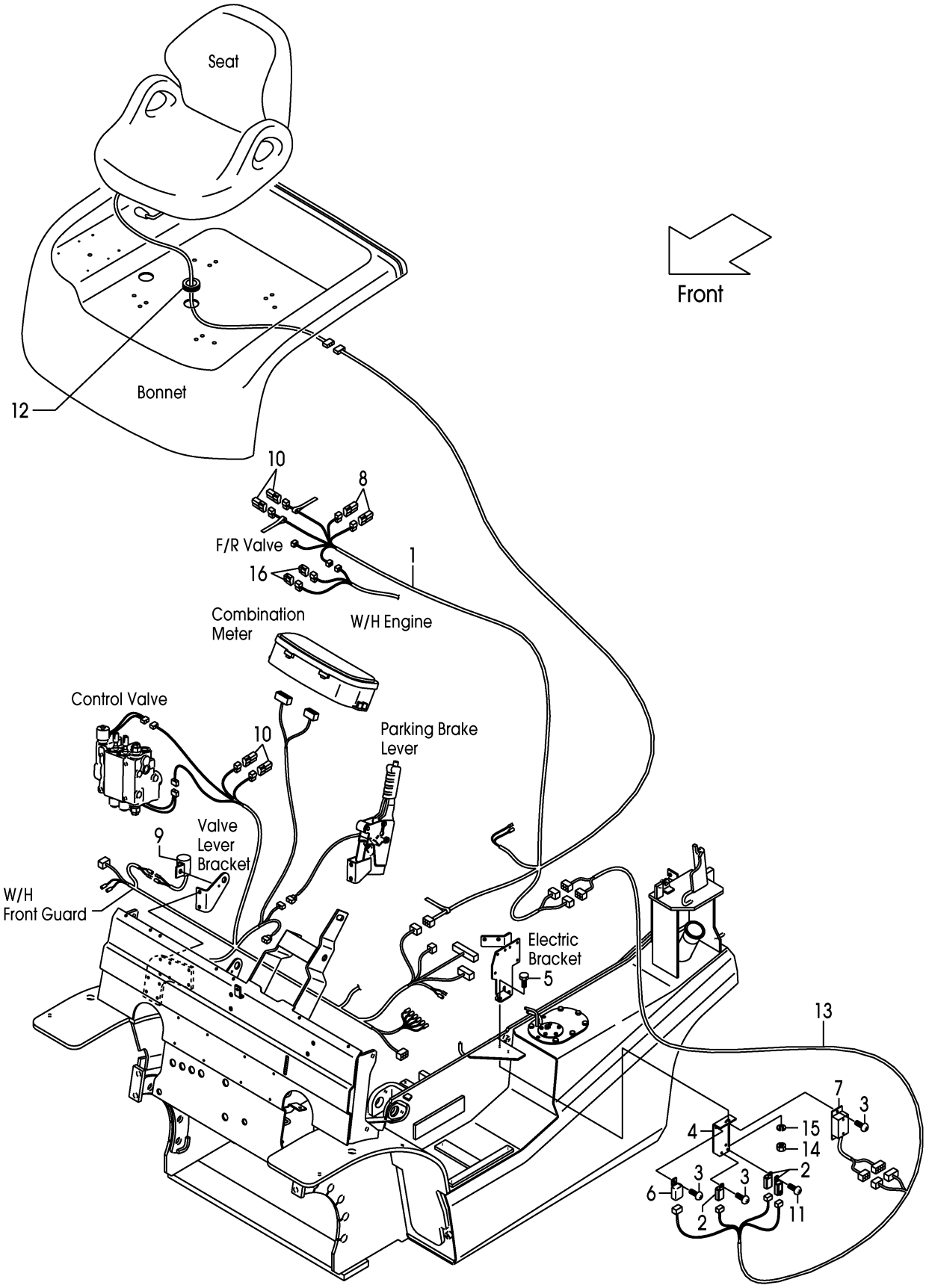

A:FD20T3Z FD25T3Z

Item No	Part No.	Mark	Description		Req'd	Remarks : Serial No.
1	52N57-E2012		WIRE-HARNESS,SIL,R	ﾜｲﾔﾊｰﾈｽ	1	[SIL](2006.1.15-)
2	209K2-42351		RELAY,1A	ﾘﾚｰ	3	[SIL](2006.1.15-)
3	214A2-42611		SCREW	ｽｸﾘｭ	4	[SIL](2006.1.15-)
4	52N57-E2201		BRACKET,RELAY	ﾌﾞﾗｹｯﾄ	1	[SIL](2006.1.15-)
5	01185-08025		BOLT	ﾎﾞﾙﾄ	1	[SIL](2006.1.15-)
6	247C2-43501		RELAY,1C	ﾘﾚｰ	1	[SIL](2006.1.15-)
7	247C2-43301		TIMER	ﾀｲﾏ	1	[SIL](2006.1.15-)
8	21152-42091		DIODE,1A	ﾀﾞｲｵｰﾄﾞ	2	[SIL](2006.1.15-)
9	247C2-43601		BUZZER	ﾌﾞｻﾞｰ	1	[SIL](2006.1.15-)
10	230C2-42201		DIODE,3A	ﾀﾞｲｵｰﾄﾞ	4	[SIL](2006.1.15-)
11	214A2-42621		SCREW	ｽｸﾘｭ	1	[SIL](2006.1.15-)
12	27682-62131		GROMMET	ｸﾞﾛﾒｯﾄ	1	[SIL](2006.1.15-)
13	246B2-43221		WIRE,LEAD,SIL	ﾜｲﾔ	1	[SIL](2006.1.15-)
14	01400-00008		NUT	ﾅｯﾄ	1	[SIL](2006.1.15-)
15	02010-00008		WASHER	ﾜｯｼｬ	1	[SIL](2006.1.15-)
16	52N57-E3021		HOUSING,2P	ﾊｳｼﾞﾝｸﾞ	2	[SIL](2006.5.8-)

FIG.52 DRIVE UNIT MOUNT (CLUTCH)

(F7Z22510) ﾄﾞﾗｲﾌﾞﾕﾆｯﾄﾏｳﾝﾄ

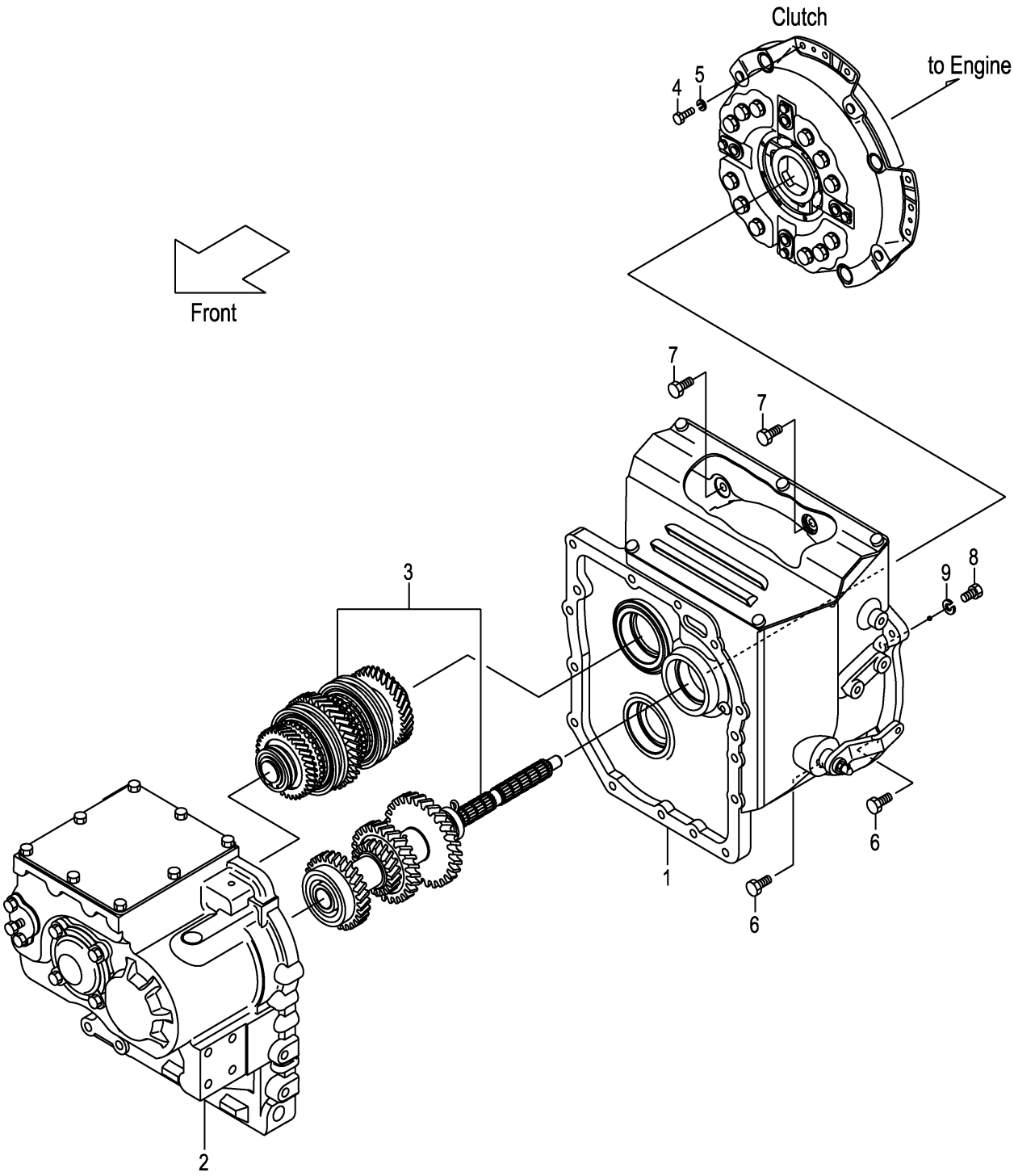

A:FD20C3Z FD25C3Z

Item No	Part No.	Mark	Description		Req'd	Remarks : Serial No.
A1	12N42-50201		UNIT-ASSY,DRIVE	ﾄﾞﾗｲﾌﾞﾕﾆｯﾄｱｯｾﾝ	1	1-501
						INC.1-3
-	12N42-50202		UNIT-ASSY,DRIVE	ﾄﾞﾗｲﾌﾞﾕﾆｯﾄｱｯｾﾝ	1	502-
						INC.1-3
1	NO PART NO.		CLUTCH	ｸﾗｯﾁ	1	SEE FIG.55:1-17
2	NO PART NO.		CASE,T/M	ｹｰｽ	1	SEE FIG.56
3	NO PART NO.		GEAR,T/M	ｷﾞﾔｰ	1	SEE FIG.57
4	01103-08016		BOLT	ﾎﾞﾙﾄ	12	
5	02011-00008		WASHER	ﾜｯｼｬ	12	
6	01184-10030		BOLT	ﾎﾞﾙﾄ	5	
7	01184-10025		BOLT	ﾎﾞﾙﾄ	2	
8	01100-10040		BOLT	ﾎﾞﾙﾄ	1	
9	02010-00010		WASHER	ﾜｯｼｬ	1	

FIG.53 DRIVE UNIT MOUNT (TOR-CON)

(F7Z22520) ﾄﾞﾗｲﾌﾞﾕﾆｯﾄﾏｳﾝﾄ

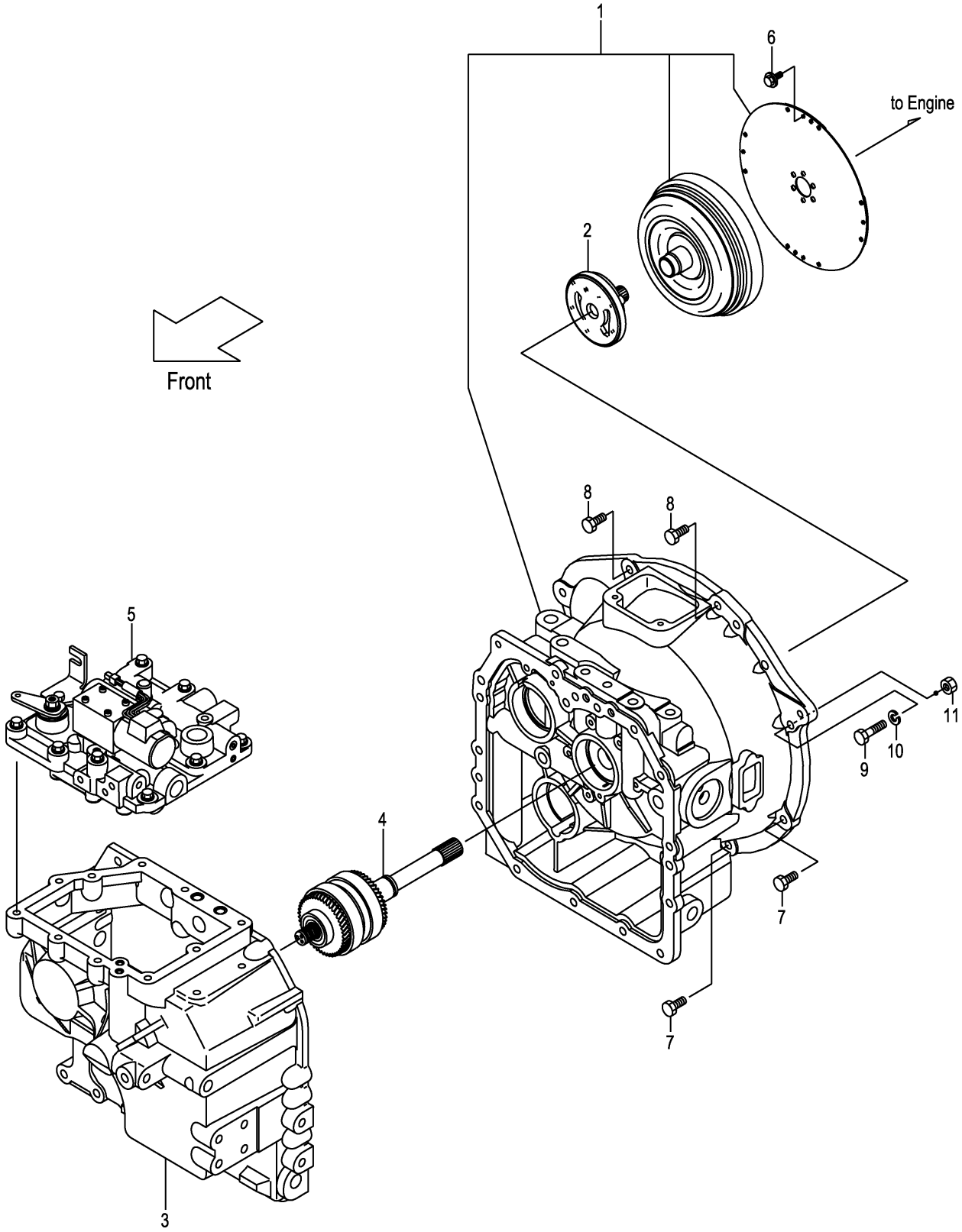

A:FD20T3Z FD25T3Z

Item No	Part No.	Mark	Description		Req'd	Remarks : Serial No.
A1	12N52-50201		UNIT-ASSY,DRIVE	ﾄﾞﾗｲﾌﾞﾕﾆｯﾄｱｯｾﾝ	1	INC.1-5
1	NO PART NO.		CASE,T/C	ｹｰｽ	1	SEE FIG.58
2	NO PART NO.		PUMP	ﾎﾟﾝﾌﾟ	1	SEE FIG.59
3	NO PART NO.		CASE,T/M	ｹｰｽ	1	SEE FIG.60
4	NO PART NO.		PACK,CLUTCH	ﾊﾟｯｸ	1	SEE FIG.61
5	NO PART NO.		VALVE,CONTROL	ﾊﾞﾙﾌﾞ	1	SEE FIG.62
6	12N53-82621		BOLT,FLANGE	ﾎﾞﾙﾄ	12	
7	01184-10030		BOLT	ﾎﾞﾙﾄ	5	
8	01184-10025		BOLT	ﾎﾞﾙﾄ	2	
9	01100-10055		BOLT	ﾎﾞﾙﾄ	1	
10	02010-00010		WASHER	ﾜｯｼｬ	1	
11	01400-00010		NUT	ﾅｯﾄ	1	

FIG.54 CHANGE LEVER (CLUTCH)

(F7Z22540) チェンジレバー

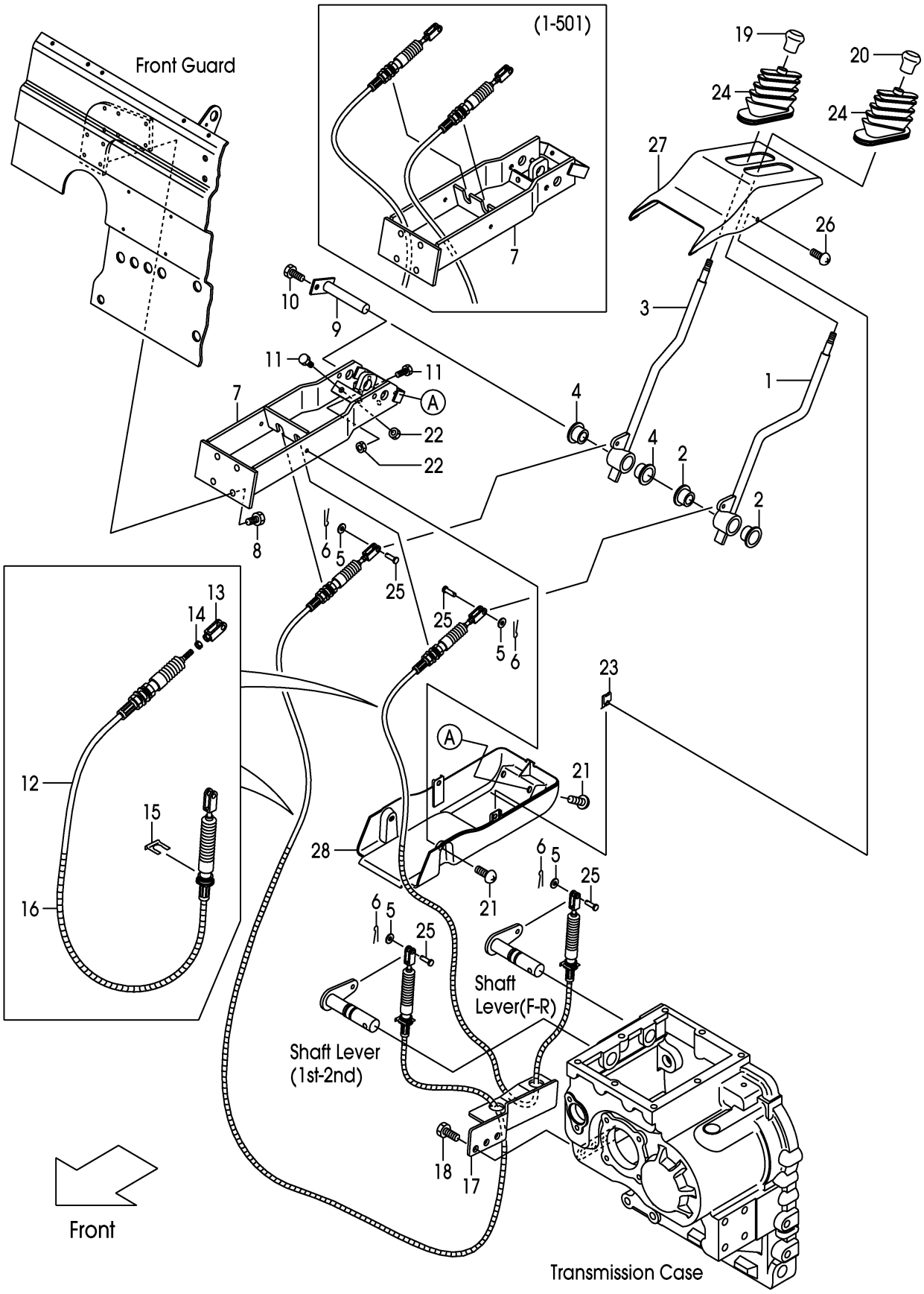

A:FD20C3Z FD25C3Z

Item No	Part No.	Mark	Description		Req'd	Remarks : Serial No.
A1	22N43-90201		LEVER-ASSY,DIRECTION		1	1-113
				ﾃﾞｨﾚｸｼｮﾝﾚﾊﾞｰｱｯｾﾝ		INC.1,2
-	22N43-90202		LEVER-ASSY,DIRECTION		1	114-501
				ﾃﾞｨﾚｸｼｮﾝﾚﾊﾞｰｱｯｾﾝ		INC.1,2
-	22N43-90311		LEVER-ASSY,DIRECTION		1	502-
				ﾃﾞｨﾚｸｼｮﾝﾚﾊﾞｰｱｯｾﾝ		INC.1,2
1	NO PART NO.	#	LEVER,DIRECTION	ﾚﾊﾞｰ	1	
2	214A7-42071		BUSHING	ﾌﾞｯｼﾝｸﾞ	2	
A2	22N43-90211		LEVER-ASSY,SPEED	ｽﾋﾟｰﾄﾞﾚﾊﾞｰｱｯｾﾝ	1	1-113
						INC.3,4
-	22N43-90212		LEVER-ASSY,SPEED	ｽﾋﾟｰﾄﾞﾚﾊﾞｰｱｯｾﾝ	1	114-501
						INC.3,4
-	22N43-90321		LEVER-ASSY,SPEED	ｽﾋﾟｰﾄﾞﾚﾊﾞｰｱｯｾﾝ	1	502-
						INC.3,4
3	NO PART NO.	#	LEVER,SPEED	ﾚﾊﾞｰ	1	
4	214A7-42071		BUSHING	ﾌﾞｯｼﾝｸﾞ	2	
5	02000-00006		WASHER	ﾜｯｼｬ	4	
6	02200-16010		PIN,COTTER	ﾋﾟﾝ	4	
7	22N43-90301		BRACKET	ﾌﾞﾗｹｯﾄ	1	1-501
-	22N43-90411		BRACKET	ﾌﾞﾗｹｯﾄ	1	502-
8	01185-08020		BOLT	ﾎﾞﾙﾄ	4	
9	22N43-92201		SHAFT	ｼｬﾌﾄ	1	
10	01183-08012		BOLT	ﾎﾞﾙﾄ	1	
11	01100-08025		BOLT	ﾎﾞﾙﾄ	4	1-501
-	01100-08020		BOLT	ﾎﾞﾙﾄ	4	502-
A3	22N43-90511		CABLE-ASSY	ｹｰﾌﾞﾙｱｯｾﾝ	2	1-501
						INC.12-16
-	22N43-90561		CABLE-ASSY	ｹｰﾌﾞﾙｱｯｾﾝ	2	502-
						INC.12-16
12	22N43-93001		CABLE	ｹｰﾌﾞﾙ	2	1-501
-	22N43-93201		CABLE	ｹｰﾌﾞﾙ	2	502-
13	22N43-93021		END	ｴﾝﾄﾞ	2	
14	01402-00006		NUT	ﾅｯﾄ	2	
15	22N43-93011		CLAMP	ｸﾗﾝﾌﾟ	2	
16	22N43-93031		PROTECTOR	ﾌﾟﾛﾃｸﾀ	2	
17	22N43-92302		BRACKET	ﾌﾞﾗｹｯﾄ	1	1-501
-	22N43-93151		BRACKET	ﾌﾞﾗｹｯﾄ	1	502-
18	01213-10025		BOLT	ﾎﾞﾙﾄ	3	
19	214A2-52002		KNOB,SPEED	ﾉﾌﾞ	1	
20	214A2-52012		KNOB,DIRECTION	ﾉﾌﾞ	1	
21	225R6-42031		SCREW	ｽｸﾘｭ	4	
22	01402-00008		NUT	ﾅｯﾄ	4	
23	281E6-42521		NUT,SPEED	ﾅｯﾄ	2	
24	22N43-92731		BOOT	ﾌﾞｰﾂ	2	
25	02262-06020		PIN,CLEVIS	ﾋﾟﾝ	4	
26	209K2-43001		SCREW	ｽｸﾘｭ	2	
27	22N43-92901		COVER,UPPER	ｶﾊﾞｰ	1	
28	22N43-92911		COVER,UNDER	ｶﾊﾞｰ	1	

FIG.55 CLUTCH (CLUTCH)

(F7Z22550) クラッチ

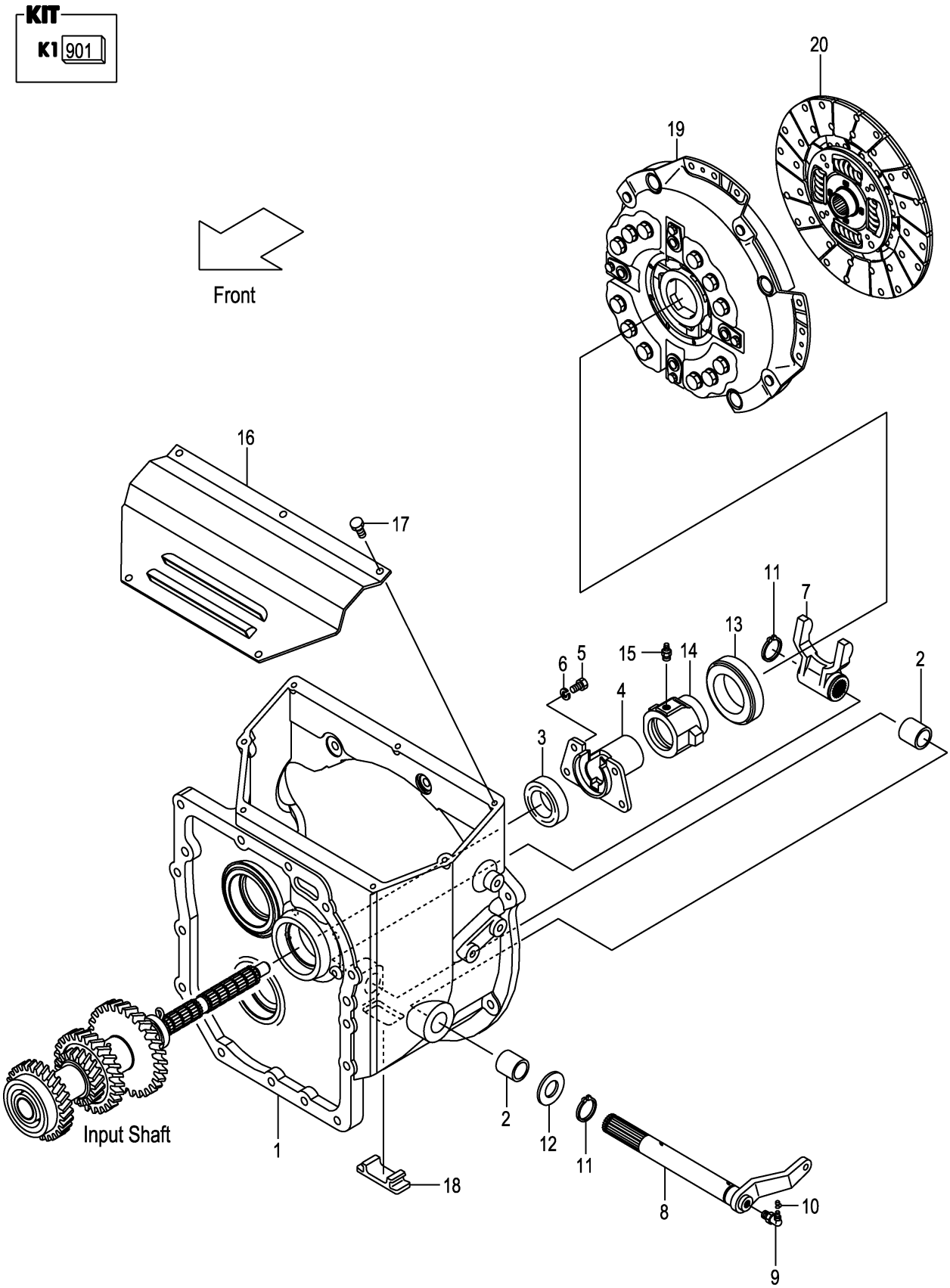

A:FD20C3Z FD25C3Z

Item No	Part No.	Mark	Description		Req'd	Remarks : Serial No.
901	12N43-19801	K1	KIT,REPAIR,T/M		1	INC.3,11,FIG.57:2,7,14,
				ﾄﾗﾝｽﾐｯｼｮﾝﾘﾍﾟｱｷｯﾄ		32,35,38
1	12N43-12001		HOUSING,CLUTCH	ﾊｳｼﾞﾝｸﾞ	1	
2	12003-12021		BUSHING	ﾌﾞｯｼﾝｸﾞ	2	
3	12N43-12011	*	SEAL,OIL	ｼｰﾙ	1	
4	12N43-12021		SUPPORT,RETAINER	ｻﾎﾟｰﾄ	1	
5	01103-08016		BOLT	ﾎﾞﾙﾄ	4	
6	02011-00008		WASHER	ﾜｯｼｬ	4	
7	12N43-12101		YOKE	ﾖｰｸ	1	
8	12N43-12111		SHAFT	ｼｬﾌﾄ	1	
9	04901-00190		FITTING	ﾌｨｯﾃｨﾝｸﾞ	1	
10	22199-12401		CAP,NIPPLE	ｷｬｯﾌﾟ	1	
11	02100-00025	*	RING,SNAP	ﾘﾝｸﾞ	2	
12	02000-00024		WASHER	ﾜｯｼｬ	1	
13	135C3-12081		BRG,THRUST	ﾍﾞｱﾘﾝｸﾞ	1	
14	12N43-12201		RETAINER,BRG	ﾘﾃｰﾅ	1	
15	04901-00100		FITTING	ﾌｨｯﾃｨﾝｸﾞ	1	
16	12N43-12151		COVER,CLUTCH-HOUSING	ｶﾊﾞｰ	1	
17	01183-08016		BOLT	ﾎﾞﾙﾄ	5	
18	12N53-82061		COVER,UNDER	ｶﾊﾞｰ	1	
19	10A63-10201		COVER,CLUTCH	ｶﾊﾞｰ	1	
20	12N43-10211		DISK,CLUTCH	ﾃﾞｨｽｸ	1	

FIG.56 MISSION CASE (CLUTCH)

(F7Z22560) ミッションケース

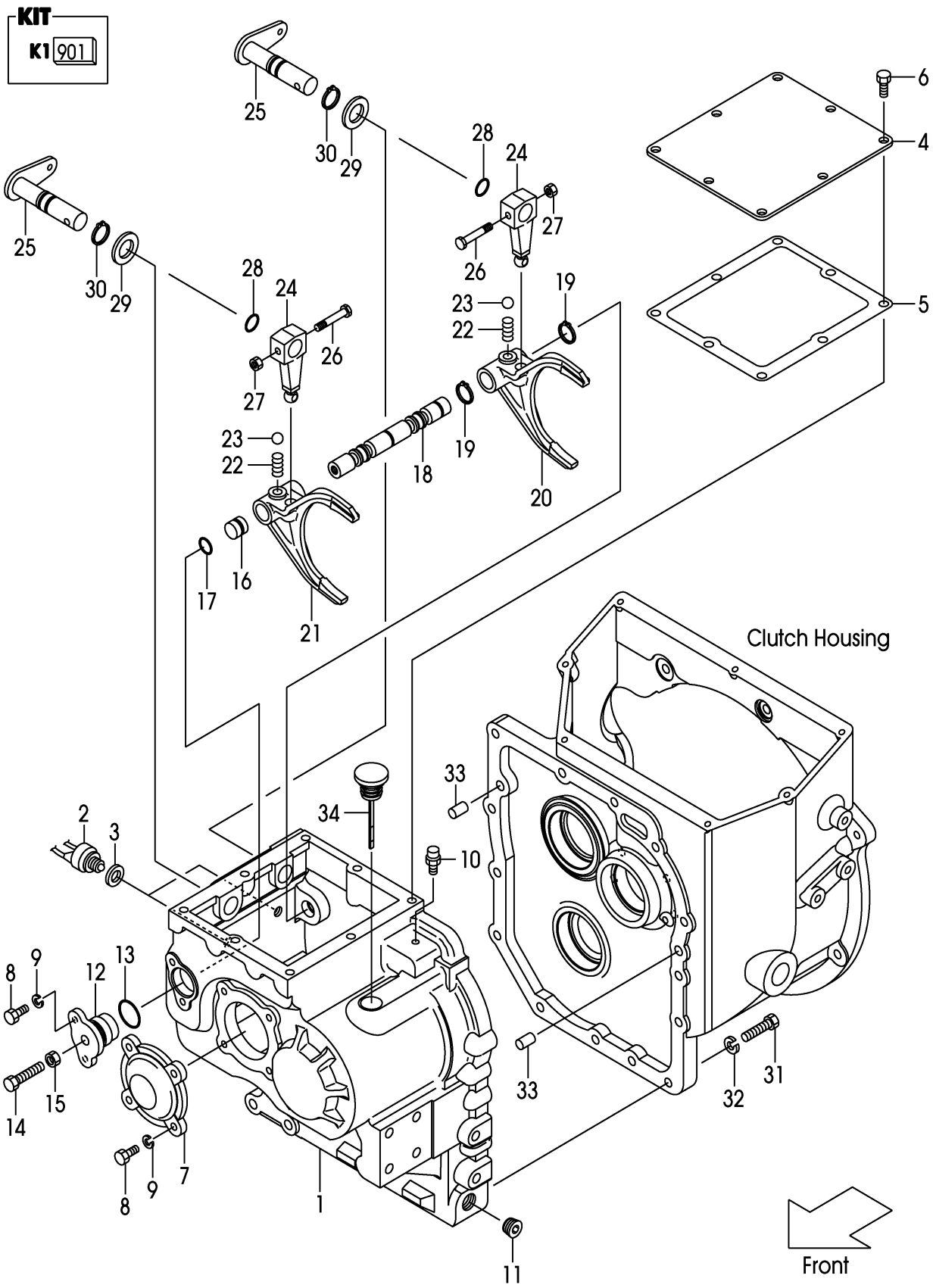

A:FD20C3Z FD25C3Z

Item No	Part No.	Mark	Description		Req'd	Remarks : Serial No.
901	12N43-19811	K1	KIT,REPAIR,SHIFT-ROD	ｼﾌﾄﾛｯﾄﾞﾘﾍﾟｱｷｯﾄ	1	INC.3,5,13,17,19,27,28,30
1	12N43-42001		CASE,T/M	ｹｰｽ	1	
2	12003-42451		SWITCH,BACK-LAMP	ｽｲｯﾁ	2	
3	12003-42461	*	PACKING,BACK-LAMP	ﾊﾟｯｷﾝｸﾞ	2	
4	12N43-42511		COVER,CASE	ｶﾊﾞｰ	1	
5	12N43-42521	*	GASKET,CASE-COVER	ｶﾞｽｹｯﾄ	1	
6	01184-10016		BOLT	ﾎﾞﾙﾄ	8	
7	12N43-42031		COVER,BRG	ｶﾊﾞｰ	1	
8	01103-08020		BOLT	ﾎﾞﾙﾄ	6	
9	02011-00008		WASHER	ﾜｯｼｬ	6	
10	15573-42151		BREATHER,AIR	ﾌﾞﾘｰｻﾞ	1	
11	12163-82541		PLUG	ﾌﾟﾗｸﾞ	1	
12	12003-42052		SUPPORT,ARM-SHAFT	ｻﾎﾟｰﾄ	1	
13	03310-00300	*	O-RING	Oﾘﾝｸﾞ	1	
14	01123-10045		BOLT	ﾎﾞﾙﾄ	1	
15	01400-00010		NUT	ﾅｯﾄ	1	
16	12003-42061		SPACER	ｽﾍﾟｰｻ	1	
17	03300-00160	*	O-RING	Oﾘﾝｸﾞ	1	
18	12N43-42401		ROD,SHIFT	ﾛｯﾄﾞ	1	
19	02100-00020	*	RING,SNAP	ﾘﾝｸﾞ	2	
20	12N43-42411		FORK,SHIFT,F-R	ﾌｫｰｸ	1	
21	12N43-42421		FORK,SHIFT,H-L	ﾌｫｰｸ	1	
22	12N43-42481		SPRING	ｽﾌﾟﾘﾝｸﾞ	2	1-501
-	12003-42421		SPRING	ｽﾌﾟﾘﾝｸﾞ	2	502-
23	03190-00013		BALL,STEEL	ﾎﾞｰﾙ	2	
24	12N43-42431		ARM,SHIFT	ｱｰﾑ	2	
25	12N43-42441		LEVER,SHIFT	ﾚﾊﾞｰ	2	1-501
-	12N43-42601		LEVER,SHIFT	ﾚﾊﾞｰ	2	502-
26	12N43-42471		BOLT	ﾎﾞﾙﾄ	2	
27	23652-12051	*	NUT	ﾅｯﾄ	2	
28	03300-00180	*	O-RING	Oﾘﾝｸﾞ	2	
29	02000-00022		WASHER	ﾜｯｼｬ	2	
30	02100-00022	*	RING,SNAP	ﾘﾝｸﾞ	2	
31	01103-10040		BOLT	ﾎﾞﾙﾄ	14	
32	02011-00010		WASHER	ﾜｯｼｬ	14	
33	02212-12020		PIN,PARALLEL	ﾋﾟﾝ	2	
34	12N43-42501		GAUGE,LEVEL	ｹﾞｰｼﾞ	1	

FIG.57 MISSION GEAR (CLUTCH)

(F7Z22570) ﾐｯｼｮﾝｷﾞﾔｰ

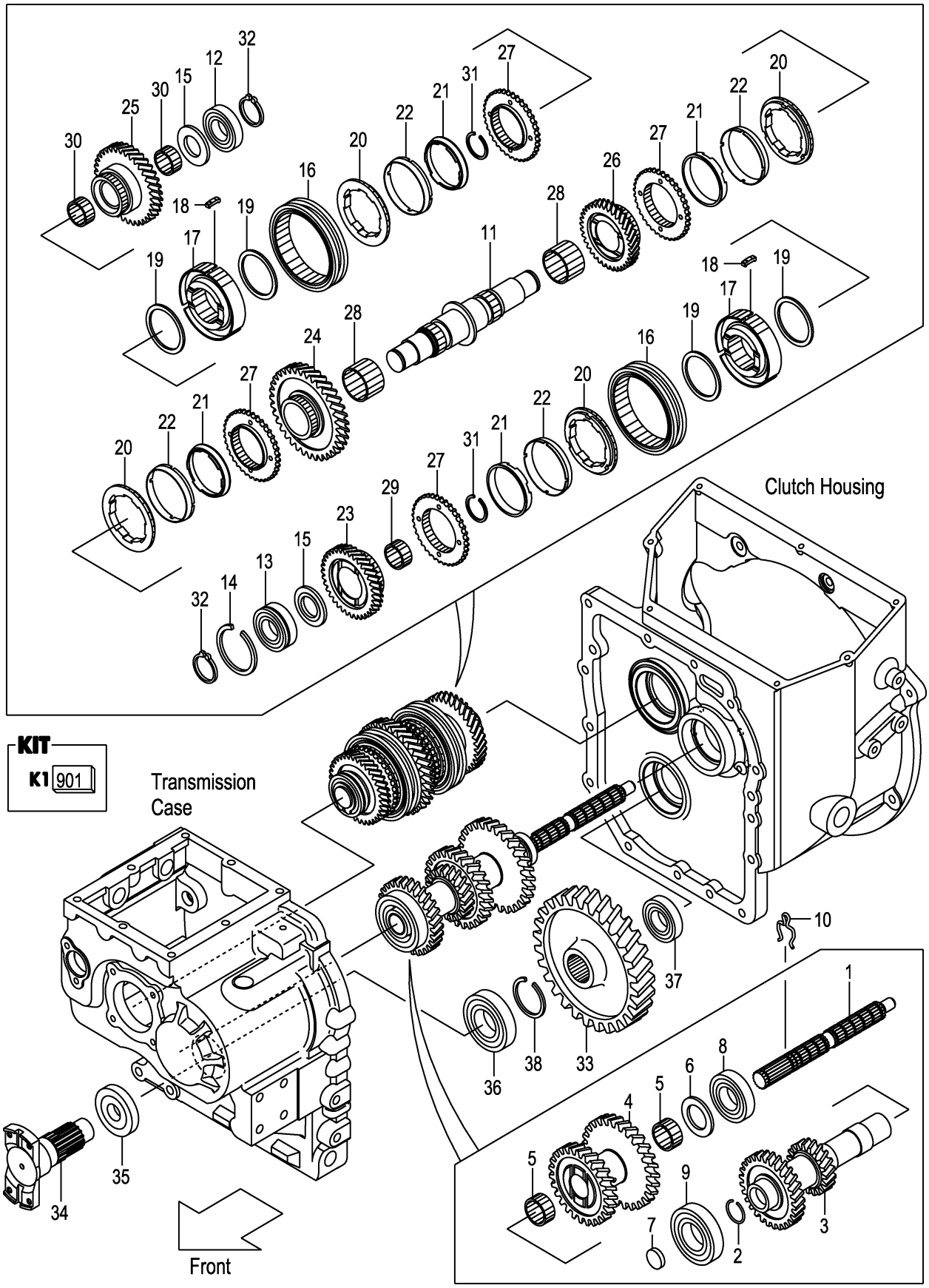

A:FD20C3Z FD25C3Z

Item No	Part No.	Mark	Description		Req'd	Remarks : Serial No.
901	12N43-19801	K1	KIT,REPAIR,T/M		1	INC.2,7,14,32,35,38,
				ﾄﾗﾝｽﾐｯｼｮﾝﾘﾍﾟｱｷｯﾄ		FIG.55:3,11
1	12N43-42051		SHAFT,MAIN-DRIVE	ｼｬﾌﾄ	1	
2	12N43-42071	*	RING,SNAP	ﾘﾝｸﾞ	1	
3	12N43-42101		SHAFT,INPUT	ｼｬﾌﾄ	1	
4	12N43-42111		GEAR,COUNTER	ｷﾞﾔｰ	1	
5	12N43-42121		BRG,NEEDLE	ﾍﾞｱﾘﾝｸﾞ	2	
6	12N43-42131		PLATE,THRUST	ﾌﾟﾚｰﾄ	1	
7	134A3-42071	*	CAP	ｷｬｯﾌﾟ	1	
8	03000-06207		BRG,BALL	ﾍﾞｱﾘﾝｸﾞ	1	
9	03000-06208		BRG,BALL	ﾍﾞｱﾘﾝｸﾞ	1	
10	12N43-42061		PIN,LOCK	ﾋﾟﾝ	1	
11	12N43-42141		SHAFT,MAIN	ｼｬﾌﾄ	1	
12	03000-06306		BRG,BALL	ﾍﾞｱﾘﾝｸﾞ	1	
13	03003-06306		BRG,BALL	ﾍﾞｱﾘﾝｸﾞ	1	
14	03192-30072	*	RING,SNAP	ﾘﾝｸﾞ	1	
15	12N43-42191		PLATE,THRUST	ﾌﾟﾚｰﾄ	2	
16	12N43-42151		SLEEVE	ｽﾘｰﾌﾞ	2	
17	12N43-42161		HUB,CLUTCH	ﾊﾌﾞ	2	
18	12N43-42171		INSERT	ｲﾝｻｰﾄ	6	
19	15573-42021		SPRING,INSERT	ｽﾌﾟﾘﾝｸﾞ	4	
A1	12N43-40251		RING-ASSY,SYNCHRO	ｼﾝｸﾛﾘﾝｸﾞｱｯｾﾝ	4	INC.20-22
20	12N43-42201		RING,OUTER,SYNCHRO	ﾘﾝｸﾞ	4	
21	12N43-42211		RING,INNER,SYNCHRO	ﾘﾝｸﾞ	4	
22	12N43-42221		CORN,MIDDLE	ｺｰﾝ	4	
23	12N43-42251		GEAR,HIGH-SPEED	ｷﾞﾔｰ	1	
24	12N43-42261		GEAR,LOW-SPEED	ｷﾞﾔｰ	1	
25	12N43-42271		GEAR,FORWARD	ｷﾞﾔｰ	1	
26	12N43-42281		GEAR,REVERSE	ｷﾞﾔｰ	1	
27	12N43-42291		GEAR	ｷﾞﾔｰ	4	
28	12N43-42301		BRG,NEEDLE	ﾍﾞｱﾘﾝｸﾞ	2	
29	12003-42251		BRG,NEEDLE	ﾍﾞｱﾘﾝｸﾞ	1	
30	12N43-42321		BRG,NEEDLE	ﾍﾞｱﾘﾝｸﾞ	2	
31	02120-00038		RING,SNAP	ﾘﾝｸﾞ	2	
32	02100-00030	*	RING,SNAP	ﾘﾝｸﾞ	2	
-	12N43-42551	*	RING,SNAP,T-1.7	ﾘﾝｸﾞ	(2)	
-	12N43-42561	*	RING,SNAP,T-1.8	ﾘﾝｸﾞ	(2)	
-	12N43-42571	*	RING,SNAP,T-1.9	ﾘﾝｸﾞ	(2)	
-	12N43-42581	*	RING,SNAP,T-2.0	ﾘﾝｸﾞ	(2)	
33	12N43-42351		GEAR,OUTPUT	ｷﾞﾔｰ	1	
34	12N53-82201		FLANGE,T/M-OUTPUT	ﾌﾗﾝｼﾞ	1	
35	12N53-82211	*	SEAL,OIL	ｼｰﾙ	1	
36	03000-06208		BRG,BALL	ﾍﾞｱﾘﾝｸﾞ	1	
37	03000-06306		BRG,BALL	ﾍﾞｱﾘﾝｸﾞ	1	
38	02120-00040	*	RING,SNAP	ﾘﾝｸﾞ	1	

FIG.58 TORQUE CONVERTER CASE (TOR-CON)

(F7Z22580) トルクコンバータケース

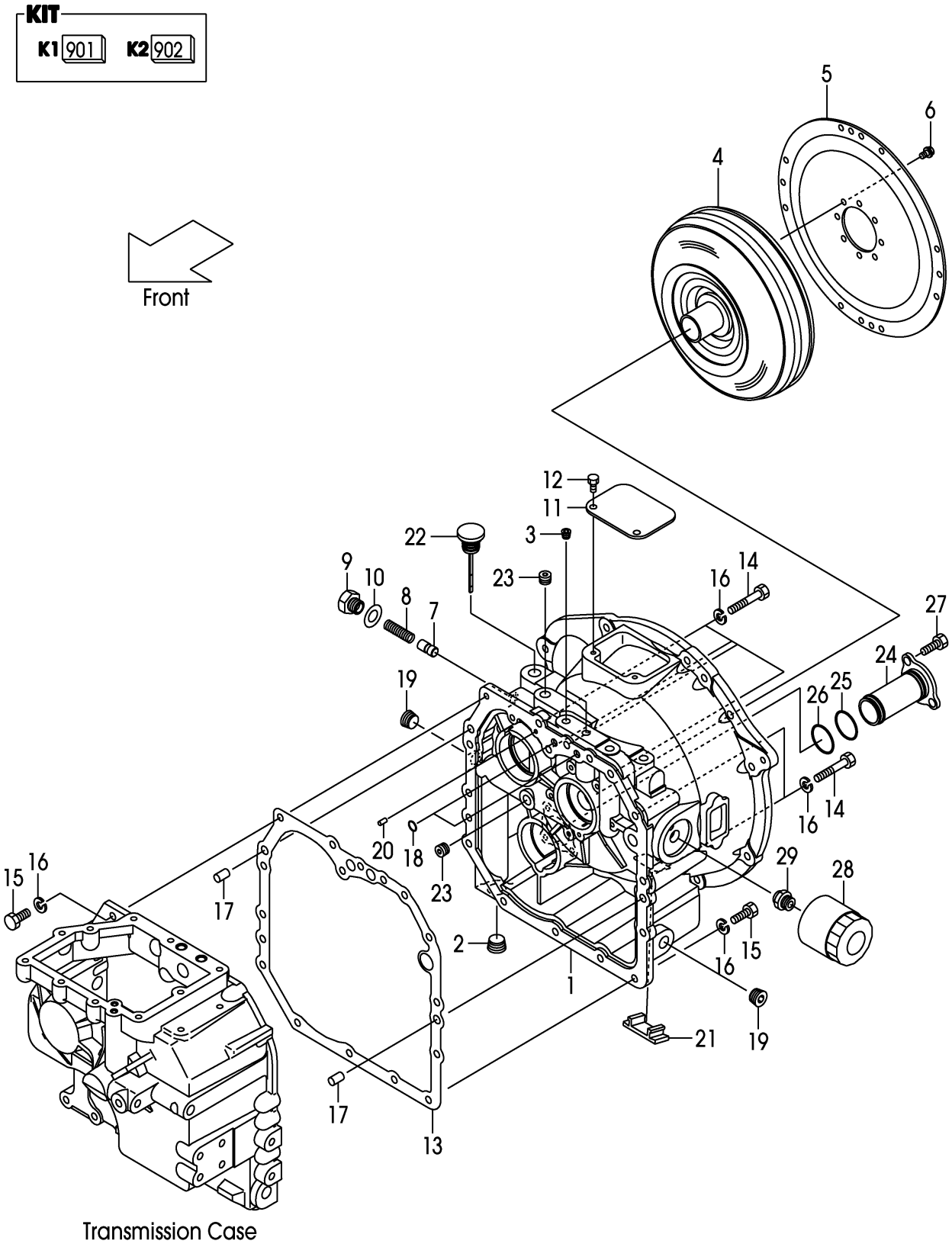

A:FD20T3Z FD25T3Z

Item No	Part No.	Mark	Description		Req'd	Remarks : Serial No.
901	12N53-89801	K1	KIT,REPAIR,T/M		1	INC.10,13,18,FIG.60:9,11-14
				ﾄﾗﾝｽﾐｯｼｮﾝﾘﾍﾟｱｷｯﾄ		
902	12N53-89811	K2	KIT,SUCTION-STRAINER	ｽﾄﾚｰﾅｷｯﾄ	1	INC.24-26
1	12N53-82001		CASE,TOR-CON	ｹｰｽ	1	
2	27397-52101		PLUG	ﾌﾟﾗｸﾞ	1	
3	116H3-82101		PLUG	ﾌﾟﾗｸﾞ	2	
4	12N53-80301		TORQUE-CONVERTER	ﾄﾙｸｺﾝﾊﾞｰﾀ	1	
5	12N53-80311		PLATE,INPUT	ﾌﾟﾚｰﾄ	1	
6	12N53-82621		BOLT,FLANGE	ﾎﾞﾙﾄ	8	
7	12N53-82011		PISTON	ﾋﾟｽﾄﾝ	1	(-2006.8.27)
-	12N53-82012		PISTON	ﾋﾟｽﾄﾝ	1	(2006.8.28-)
8	12163-82331		SPRING	ｽﾌﾟﾘﾝｸﾞ	1	
9	12N53-82021		PLUG	ﾌﾟﾗｸﾞ	1	
10	12163-82421	*	PACKING	ﾊﾟｯｷﾝｸﾞ	1	
11	12N53-82041		COVER,UPPER	ｶﾊﾞｰ	1	
12	01185-08016		BOLT	ﾎﾞﾙﾄ	2	
13	12N53-82081	*	GASKET	ｶﾞｽｹｯﾄ	1	
14	01103-10065		BOLT	ﾎﾞﾙﾄ	6	
15	01103-10030		BOLT	ﾎﾞﾙﾄ	9	
16	02011-00010		WASHER	ﾜｯｼｬ	15	
17	02212-12020		PIN,PARALLEL	ﾋﾟﾝ	2	
18	15583-82521	*	O-RING	Oﾘﾝｸﾞ	2	
19	12163-82541		PLUG	ﾌﾟﾗｸﾞ	2	
20	15943-83261		PIN,PARALLEL	ﾋﾟﾝ	1	
21	12N53-82061		COVER,UNDER	ｶﾊﾞｰ	1	
22	12N53-82711		GAUGE,LEVEL	ｹﾞｰｼﾞ	1	
23	24329-45541		PLUG	ﾌﾟﾗｸﾞ	2	
24	NO PART NO.	#*	STRAINER,SUCTION	ｽﾄﾚｰﾅ	1	
25	115G3-82111	*	O-RING	Oﾘﾝｸﾞ	1	
26	12N53-82761	*	O-RING	Oﾘﾝｸﾞ	1	
27	01100-08020		BOLT	ﾎﾞﾙﾄ	3	
28	115G3-82241		FILTER,OIL	ﾌｲﾙﾀ	1	
29	115G3-82251		NIPPLE	ﾆｯﾌﾟﾙ	1	

FIG.59 CHARGING PUMP (TOR-CON)

(F7Z22590) ﾁｬｰｼﾞﾝｸﾞﾎﾟﾝﾌﾟ

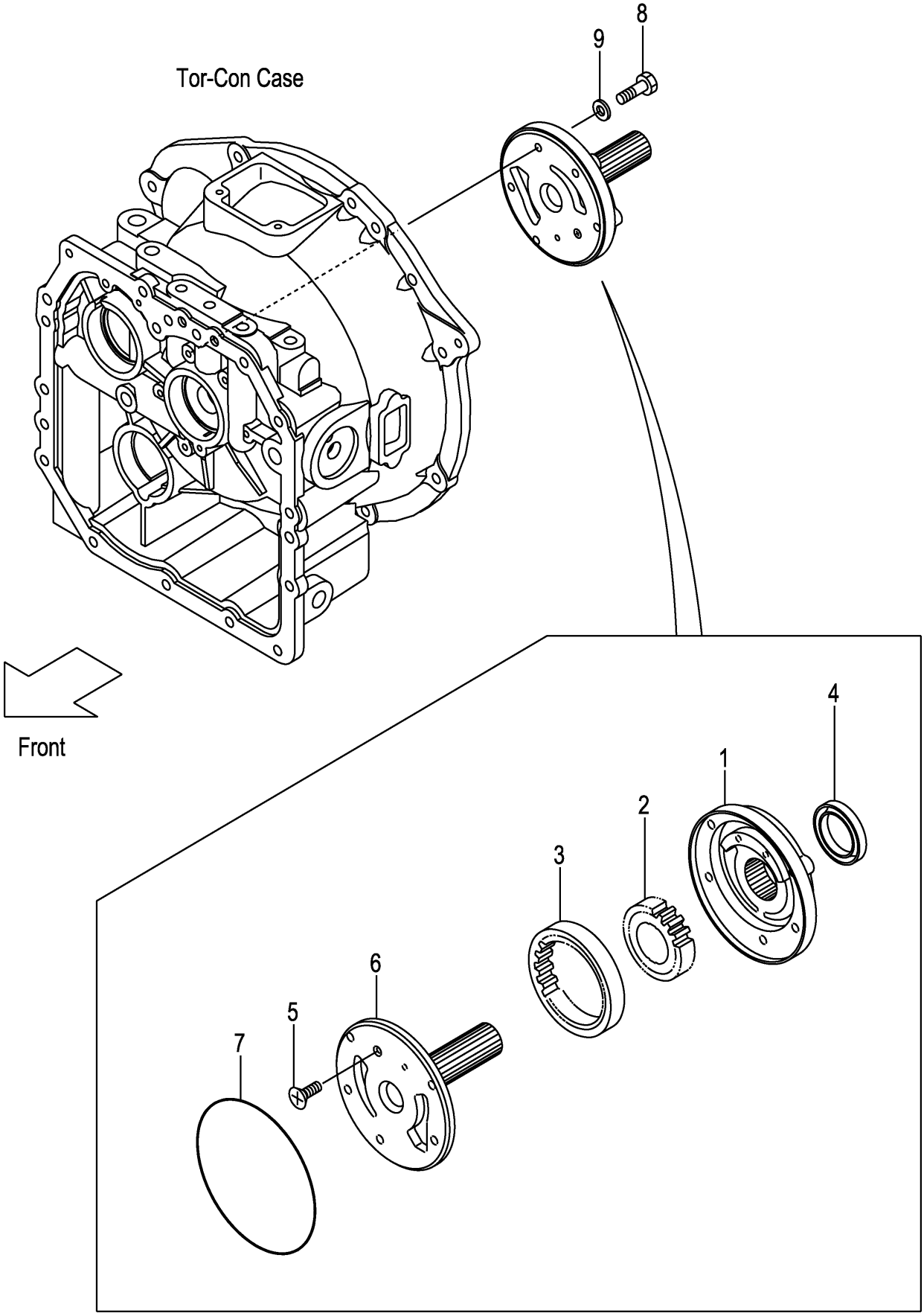

FIG.59

(F7Z22590)

A:FD20T3Z FD25T3Z

Item No	Part No.	Mark	Description		Req'd	Remarks : Serial No.
A1	12N53-80321		PUMP-ASSY,CHARGING		1	INC.1-7
				ﾁｬｰｼﾞﾝｸﾞﾎﾟﾝﾌﾟｱｯｾﾝ		
1	NO PART NO.	#	CASE,PUMP	ｹｰｽ	1	
2	NO PART NO.	#	GEAR,DRIVE	ｷﾞﾔｰ	1	
3	NO PART NO.	#	GEAR,DRIVEN	ｷﾞﾔｰ	1	
4	BK-8104209010		SEAL,OIL	ｼｰﾙ	1	
5	BK-8059061000		SCREW	ｽｸﾘｭ	1	
6	BK-7341006000		SUPPORT,STARTER	ｻﾎﾟｰﾄ	1	
7	BK-81431A4700		O-RING	Oﾘﾝｸﾞ	1	
8	12N53-82641		BOLT,FLANGE	ﾎﾞﾙﾄ	5	
9	12163-82561		PACKING	ﾊﾟｯｷﾝｸﾞ	5	

FIG.60 MISSION CASE (TOR-CON)

(F7Z225A0) ミッションケース

KIT
K1 901

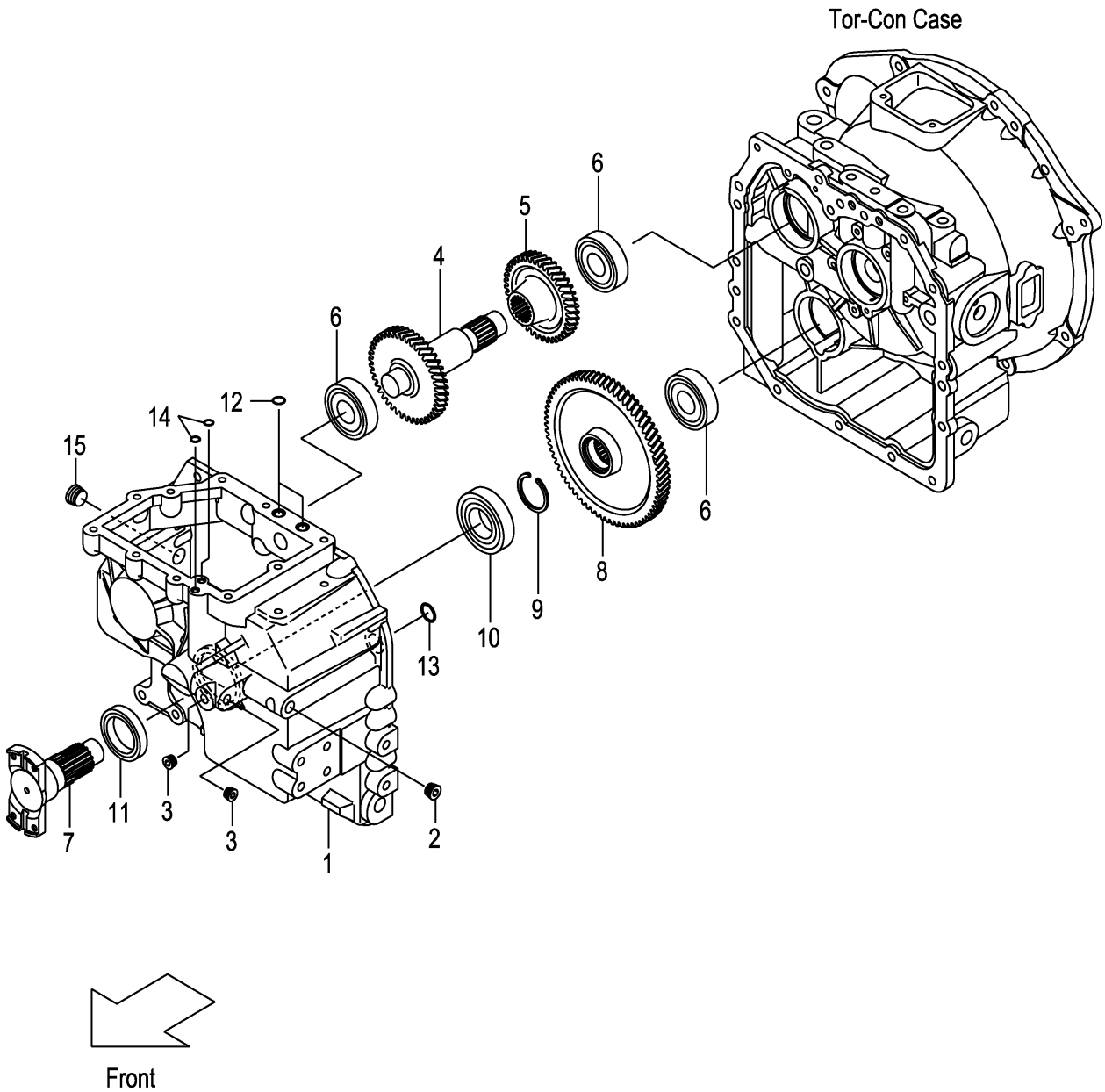

A:FD20T3Z FD25T3Z

Item No	Part No.	Mark	Description		Req'd	Remarks : Serial No.
901	12N53-89801	K1	KIT,REPAIR,T/M		1	INC.9,11-14,FIG.58:10,13,18
				ﾄﾗﾝｽﾐｯｼｮﾝﾘﾍﾟｱｷｯﾄ		
1	12N53-82091		CASE,T/M	ｹｰｽ	1	
2	24329-45541		PLUG	ﾌﾟﾗｸﾞ	1	
3	116H3-82101		PLUG	ﾌﾟﾗｸﾞ	2	
4	12N53-82151		SHAFT,IDLER	ｼｬﾌﾄ	1	
5	12N53-82161		SHAFT,GEAR	ｼｬﾌﾄ	1	
6	03000-06306		BRG,BALL	ﾍﾞｱﾘﾝｸﾞ	3	
7	12N53-82201		FLANGE,T/M-OUTPUT	ﾌﾗﾝｼﾞ	1	
8	12N53-82171		GEAR,OUTPUT	ｷﾞﾔｰ	1	
9	02120-00040	*	RING,SNAP	ﾘﾝｸﾞ	1	
10	03000-06208		BRG,BALL	ﾍﾞｱﾘﾝｸﾞ	1	
11	12N53-82211	*	SEAL,OIL	ｼｰﾙ	1	
12	15583-82521	*	O-RING	Oﾘﾝｸﾞ	2	
13	15583-82101	*	O-RING	Oﾘﾝｸﾞ	1	
14	15583-82571	*	O-RING	Oﾘﾝｸﾞ	2	
15	12163-82541		PLUG	ﾌﾟﾗｸﾞ	1	

FIG.61 CLUTCH PACK (TOR-CON)

(F7Z225B0) クラッチパック

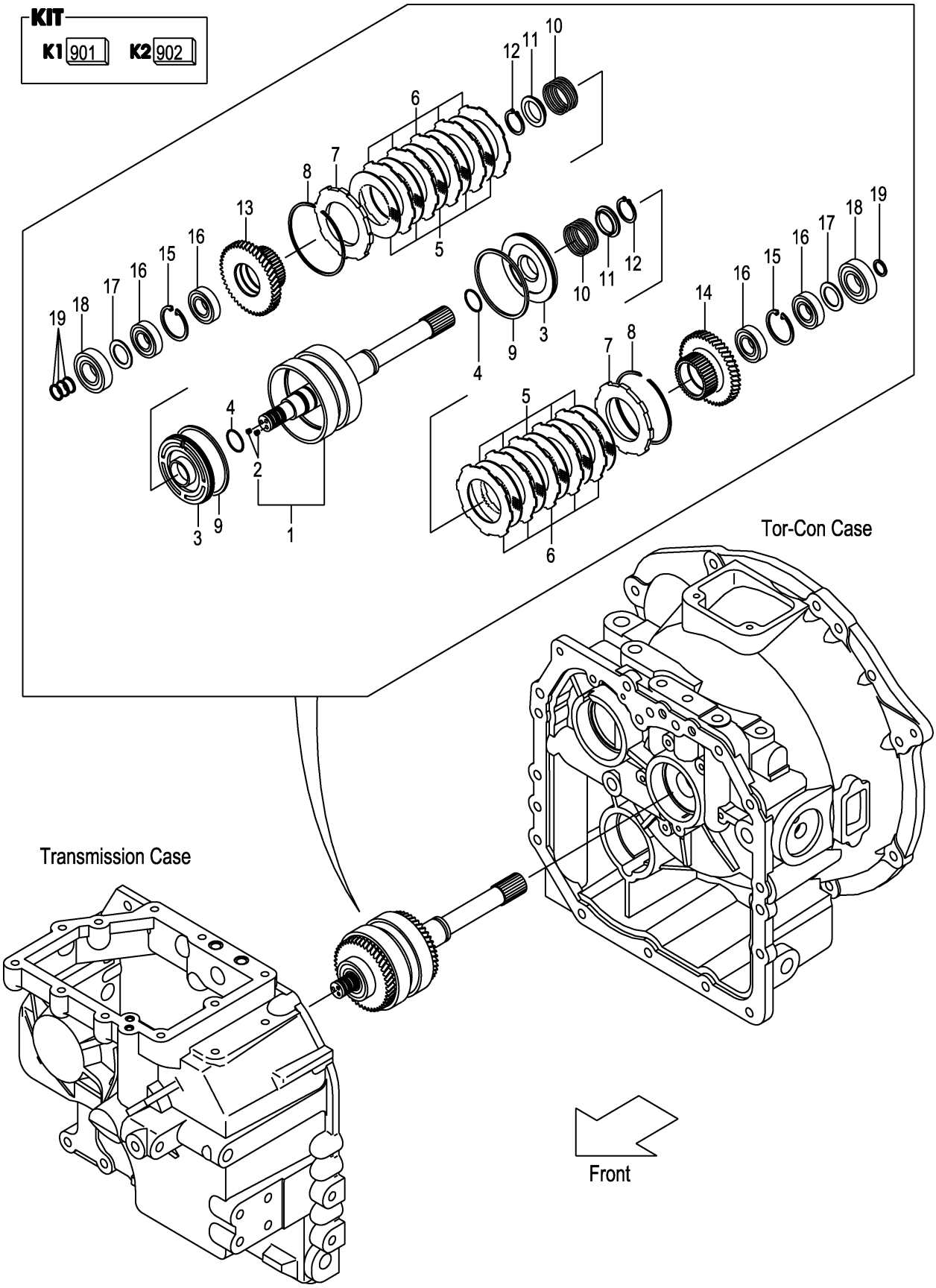

A:FD20T3Z FD25T3Z

Item No	Part No.	Mark	Description		Req'd	Remarks : Serial No.
A1	12N53-80201		CLUTCH-ASSY,HYDRAU	ﾊｲﾄﾞﾛﾘｯｸｸﾗｯﾁｱｯｾﾝ	1	INC.1-19
901	134G3-89811	K1	KIT,REPAIR,CLUTCH	ｸﾗｯﾁﾘﾍﾟｱｷｯﾄ	1	INC.4,8,9,11,12,19
902	134G3-89831	K2	KIT,REPAIR,DISK	ﾃﾞｨｽｸﾘﾍﾟｱｷｯﾄ	1	INC.5,6
1	12N53-82131		SHAFT,INPUT	ｼｬﾌﾄ	1	INC.2
2	01066-08008		PLUG	ﾌﾟﾗｸﾞ	2	
3	134G3-82111		PISTON	ﾋﾟｽﾄﾝ	2	
4	11243-82211	*	O-RING	Oﾘﾝｸﾞ	2	
5	134B3-82401	*	PLATE,FRICTION	ﾌﾟﾚｰﾄ	10	
6	134G3-82121	*	PLATE,MATING	ﾌﾟﾚｰﾄ	10	
7	134G3-82131		END,CLUTCH	ｴﾝﾄﾞ	2	
8	11243-82181	*	RING,SNAP	ﾘﾝｸﾞ	2	
9	134G3-82141	*	RING,SEAL	ﾘﾝｸﾞ	2	
10	11243-82081		SPRING,RETURN,CLUTCH	ｽﾌﾟﾘﾝｸﾞ	2	
11	11243-82091	*	SHEET,SPRING	ｼｰﾄ	2	
12	02100-00040	*	RING,SNAP	ﾘﾝｸﾞ	2	
13	12N53-82101		GEAR,FORWARD	ｷﾞﾔｰ	1	
14	12N53-82111		GEAR,REVERSE	ｷﾞﾔｰ	1	
15	02121-00058		RING,SNAP	ﾘﾝｸﾞ	2	
16	115G3-82351		BRG,BALL	ﾍﾞｱﾘﾝｸﾞ	4	
17	115G3-82361		PLATE,THRUST	ﾌﾟﾚｰﾄ	2	
18	03000-06306		BRG,BALL	ﾍﾞｱﾘﾝｸﾞ	2	
19	11243-82161	*	RING,SEAL	ﾘﾝｸﾞ	4	

FIG.62 CONTROL VALVE (TOR-CON)

(F7Z225C0) コントロールバルブ

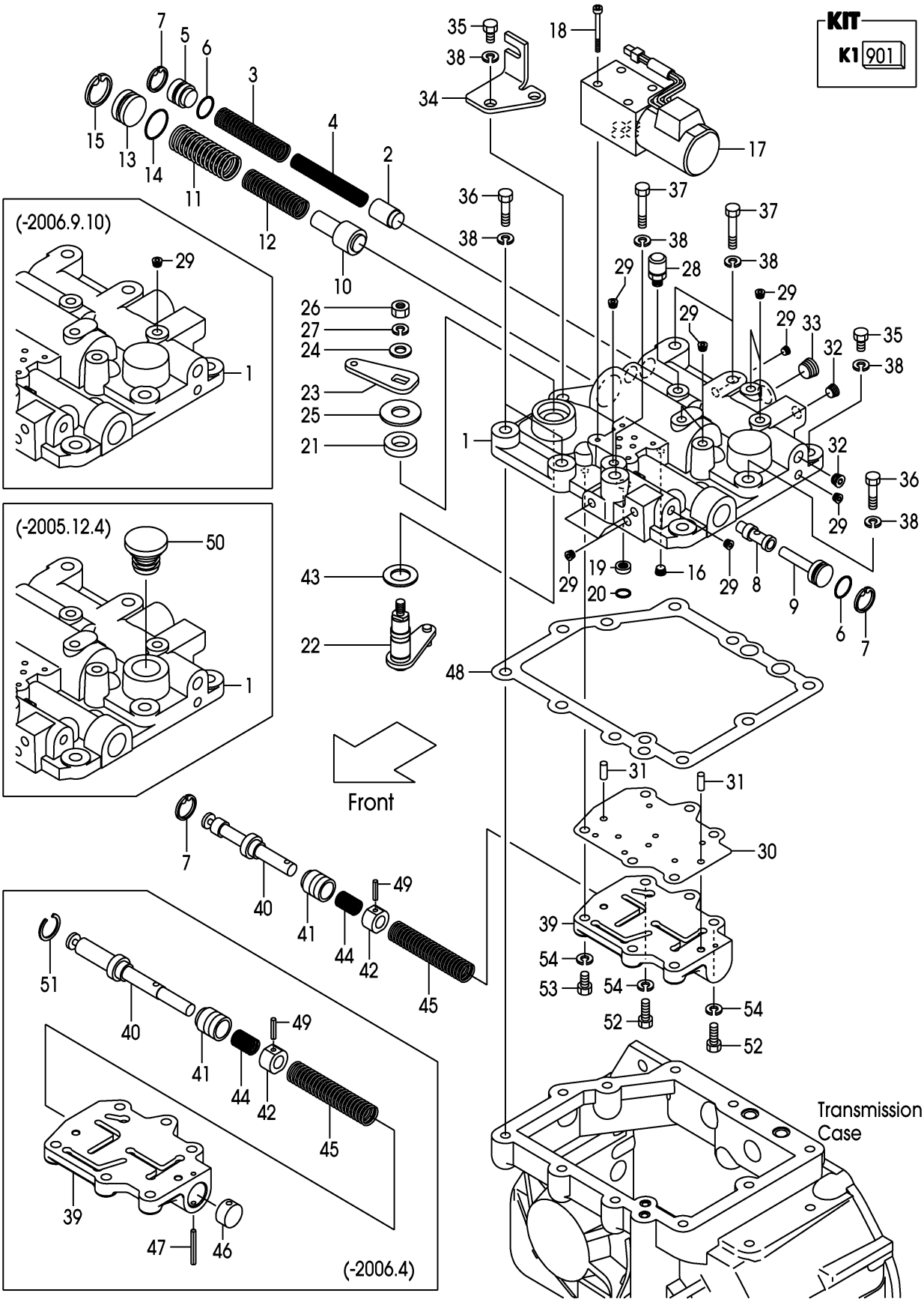

A:FD20T3Z FD25T3Z

Item No	Part No.	Mark	Description		Req'd	Remarks : Serial No.
A1	12N53-80341		VALVE-ASSY,CONTROL	ｺﾝﾄﾛｰﾙﾊﾞﾙﾌﾞｱｯｾﾝ	1	INC.1-51
901	12N53-89831	K1	KIT,REPAIR,VALVE	ﾊﾞﾙﾌﾞﾘﾍﾟｱｷｯﾄ	1	INC.6,7,14,15,21,25,30,43, 47,48,51
1	12N53-82221		COVER,CASE	ｶﾊﾞｰ	1	(-2006.4)
-	12N53-82222		COVER,CASE	ｶﾊﾞｰ	1	(2006.5-2006.9.10)
-	12N53-82223		COVER,CASE	ｶﾊﾞｰ	1	(2006.9.11-)
2	12N53-82291		PISTON,MAIN-RELIEF	ﾋﾟｽﾄﾝ	1	
3	15583-82411		SPRING	ｽﾌﾟﾘﾝｸﾞ	1	
4	15583-82421		SPRING	ｽﾌﾟﾘﾝｸﾞ	1	
5	12N53-82371		PLUG,MAIN-RELIEF	ﾌﾟﾗｸﾞ	1	
6	118H3-82231	*	O-RING	Oﾘﾝｸﾞ	2	
7	02110-00022	*	RING,SNAP	ﾘﾝｸﾞ	2	(-2006.4)
-	02110-00022	*	RING,SNAP	ﾘﾝｸﾞ	3	(2006.5-)
8	139B3-82121		SPOOL	ｽﾌﾟｰﾙ	1	
9	12N53-82351		PLUG,FR-PISTON	ﾌﾟﾗｸﾞ	1	
10	15583-82441		SPOOL,ACC	ｽﾌﾟｰﾙ	1	
11	15583-82451		SPRING	ｽﾌﾟﾘﾝｸﾞ	1	
12	15583-82461		SPRING	ｽﾌﾟﾘﾝｸﾞ	1	
13	12N53-82361		PLUG,ACC	ﾌﾟﾗｸﾞ	1	
14	12N53-82581	*	O-RING	Oﾘﾝｸﾞ	1	
15	02110-00030	*	RING,SNAP	ﾘﾝｸﾞ	1	
16	115G3-82671		PLUG,CHOKE	ﾌﾟﾗｸﾞ	1	
17	12N53-82551		VALVE,SOLENOID	ﾊﾞﾙﾌﾞ	1	
18	01170-05045		BOLT	ﾎﾞﾙﾄ	4	
19	12N53-82531		FILTER,COIN	ﾌｲﾙﾀ	1	
20	12N53-82571		O-RING	Oﾘﾝｸﾞ	1	
21	12N53-82251	*	SEAL,OIL	ｼｰﾙ	1	
22	12N53-82421		LINK,INCHING	ﾘﾝｸ	1	
23	12N53-82451		PLATE,INCHING	ﾌﾟﾚｰﾄ	1	
24	23656-42601		WASHER	ﾜｯｼｬ	1	
25	12N53-82781	*	WASHER	ﾜｯｼｬ	1	
26	01400-00008		NUT	ﾅｯﾄ	1	
27	02011-00008		WASHER	ﾜｯｼｬ	1	
28	15573-42151		BREATHER,AIR	ﾌﾞﾘｰｻﾞ	1	
29	116H3-82201		PLUG	ﾌﾟﾗｸﾞ	10	(-2006.9.10)
-	116H3-82201		PLUG	ﾌﾟﾗｸﾞ	11	(2006.9.11-)
30	12N53-82721	*	PLATE,SEPARATE	ﾌﾟﾚｰﾄ	1	
31	02212-06016		PIN,PARALLEL	ﾋﾟﾝ	2	
32	116H3-82101		PLUG	ﾌﾟﾗｸﾞ	2	
33	24329-45541		PLUG	ﾌﾟﾗｸﾞ	1	
34	12N53-82741		BRACKET,LINK	ﾌﾞﾗｹｯﾄ	1	
35	01103-10030		BOLT	ﾎﾞﾙﾄ	4	
-	01103-10030		BOLT	ﾎﾞﾙﾄ	2	[TPM]
36	01103-10040		BOLT	ﾎﾞﾙﾄ	3	
37	01103-10060		BOLT	ﾎﾞﾙﾄ	3	
38	02011-00010		WASHER	ﾜｯｼｬ	10	
39	12N53-82231		BODY,VALVE	ﾎﾞﾃﾞｨ	1	(-2006.4)
-	12N53-82232		BODY,VALVE	ﾎﾞﾃﾞｨ	1	(2006.5-)
40	12N53-82731		SPOOL,INCHING	ｽﾌﾟｰﾙ	1	(-2006.4)
-	12N53-82732		SPOOL,INCHING	ｽﾌﾟｰﾙ	1	(2006.5-)

FIG.62 CONTROL VALVE (TOR-CON)

(F7Z225C0) コントロールバルブ

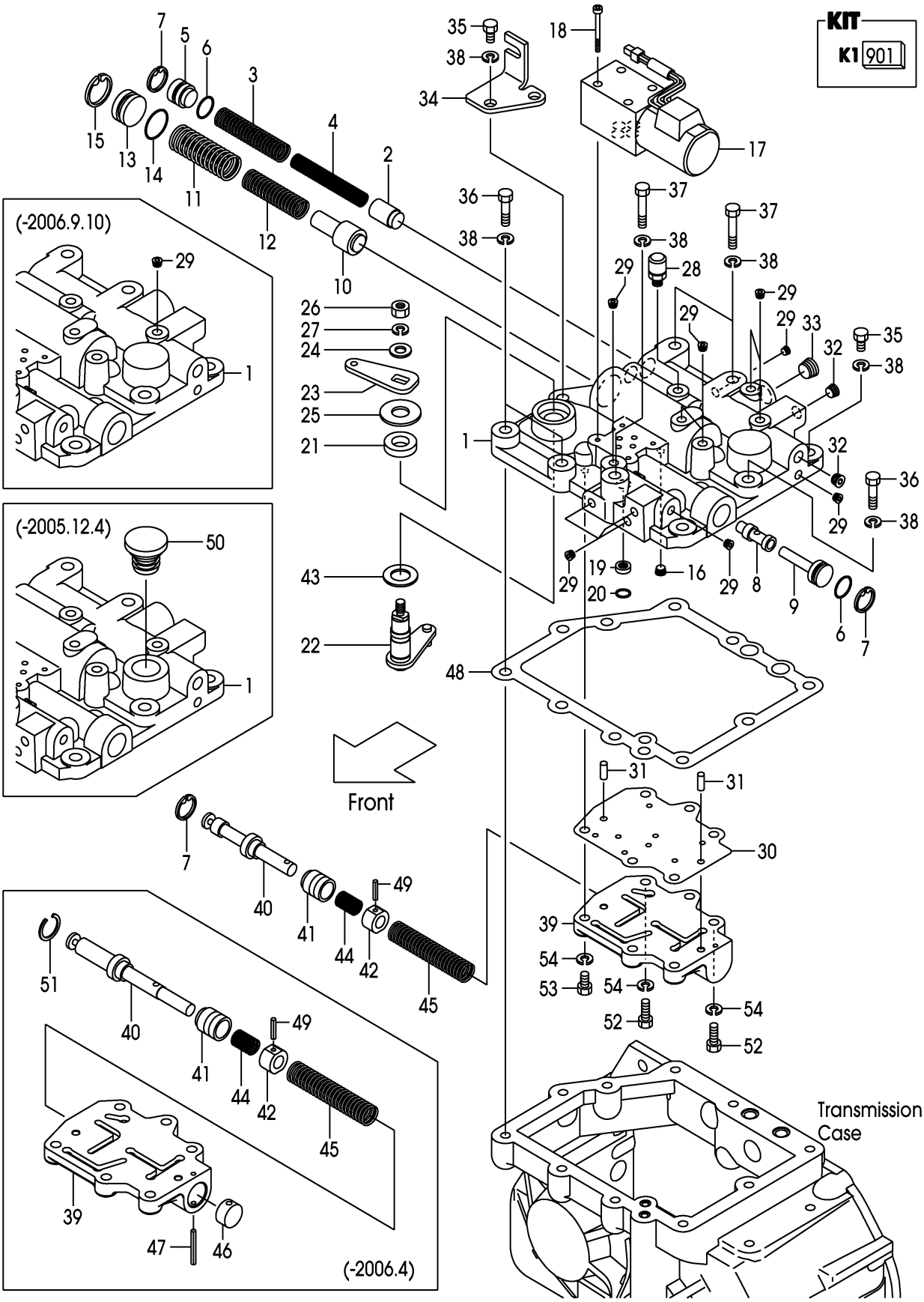

A:FD20T3Z FD25T3Z

Item No	Part No.	Mark	Description		Req'd	Remarks : Serial No.
41	12N53-82321		PLUNGER	ﾌﾟﾗﾝｼﾞｬ	1	
42	12N53-82331		PISTON	ﾋﾟｽﾄﾝ	1	
43	12N53-82771	*	WASHER	ﾜｯｼｬ	1	
44	12N53-82501		SPRING	ｽﾌﾟﾘﾝｸﾞ	1	
45	12N53-82481		SPRING	ｽﾌﾟﾘﾝｸﾞ	1	
46	12N53-82401		PLUG	ﾌﾟﾗｸﾞ	1	(-2006.4)
47	02270-04035	*	PIN,SPRING	ﾋﾟﾝ	1	(-2006.4)
48	12N53-82701	*	GASKET,CASE-COVER	ｶﾞｽｹｯﾄ	1	
49	02270-04020		PIN,SPRING	ﾋﾟﾝ	1	
50	12N53-82751		CAP,OIL	ｷｬｯﾌﾟ	1	(-2005.12.4)
51	12N53-82791	*	RING,SNAP	ﾘﾝｸﾞ	1	(-2006.4)
52	01103-08040		BOLT	ﾎﾞﾙﾄ	2	
53	01103-08030		BOLT	ﾎﾞﾙﾄ	4	
54	02011-00008		WASHER	ﾜｯｼｬ	6	

FIG.63 DRIVE AXLE

(F7Z23010) ﾄﾞﾗｲﾌﾞｱｸｽﾙ

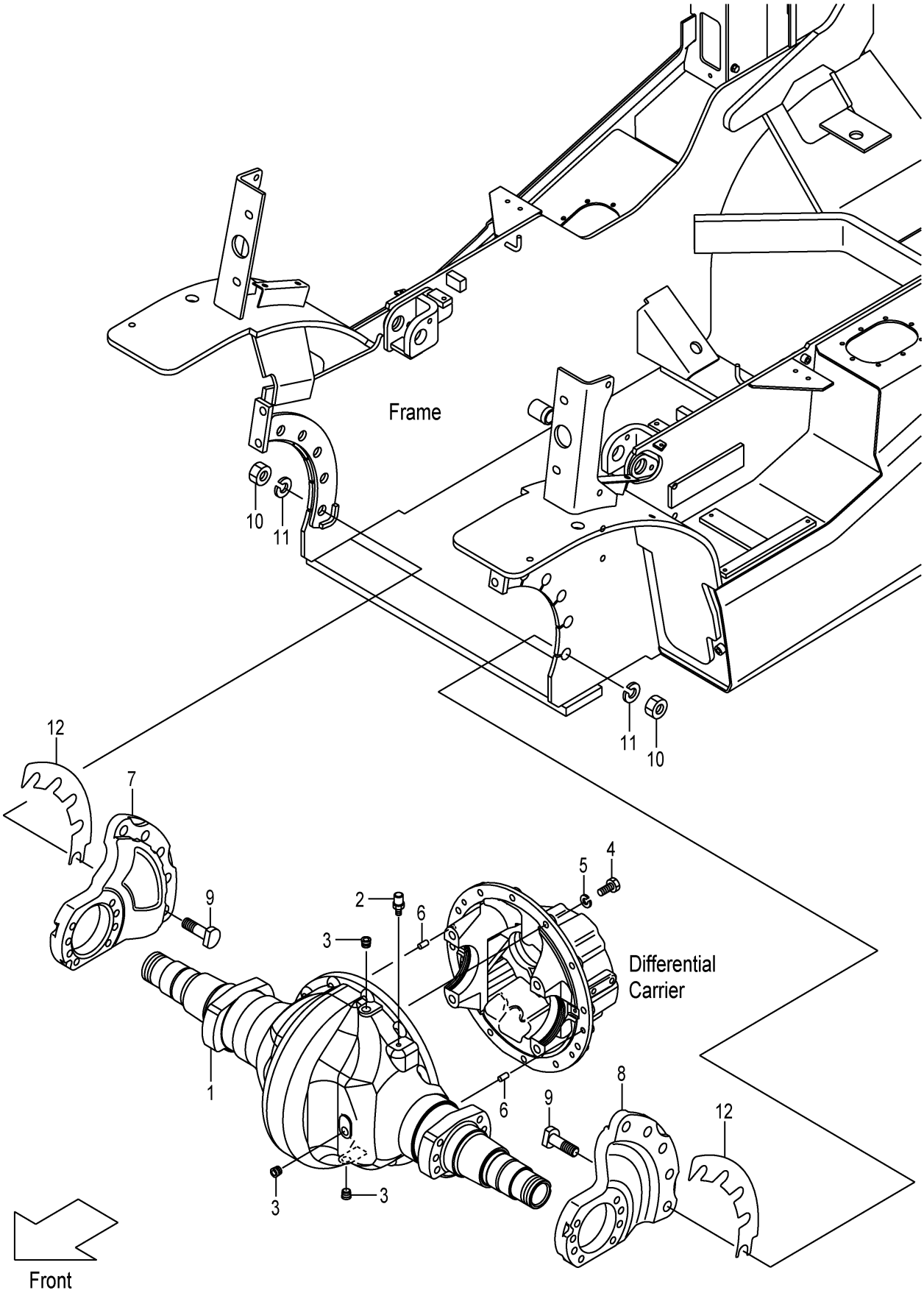

FIG.63

(F7Z23010)

A:FD20C3Z FD20T3Z FD25C3Z FD25T3Z

Item No	Part No.	Mark	Description		Req'd	Remarks : Serial No.
1	22N53-00302		HOUSING,AXLE	ﾊｳｼﾞﾝｸﾞ	1	
2	15573-42151		BREATHER,AIR	ﾌﾞﾘｰｻﾞ	1	
3	22193-03001		PLUG	ﾌﾟﾗｸﾞ	3	
4	01106-12035		BOLT	ﾎﾞﾙﾄ	12	
5	02011-00012		WASHER	ﾜｯｼｬ	12	
6	02212-10020		PIN,PARALLEL	ﾋﾟﾝ	2	
7	22N53-00602		SUPPORT,AXLE,RH	ｻﾎﾟｰﾄ	1	
8	22N53-00612		SUPPORT,AXLE,LH	ｻﾎﾟｰﾄ	1	
9	22N53-02151		BOLT	ﾎﾞﾙﾄ	10	
10	01400-10020		NUT	ﾅｯﾄ	10	
11	02010-00020		WASHER	ﾜｯｼｬ	10	
12	22N53-02611		SHIM,SUPPORT,T-1.0	ｼﾑ	2	

FIG.64 DRUM HUB

(F7Z23020) ﾄﾞﾗﾑﾊﾌﾞ

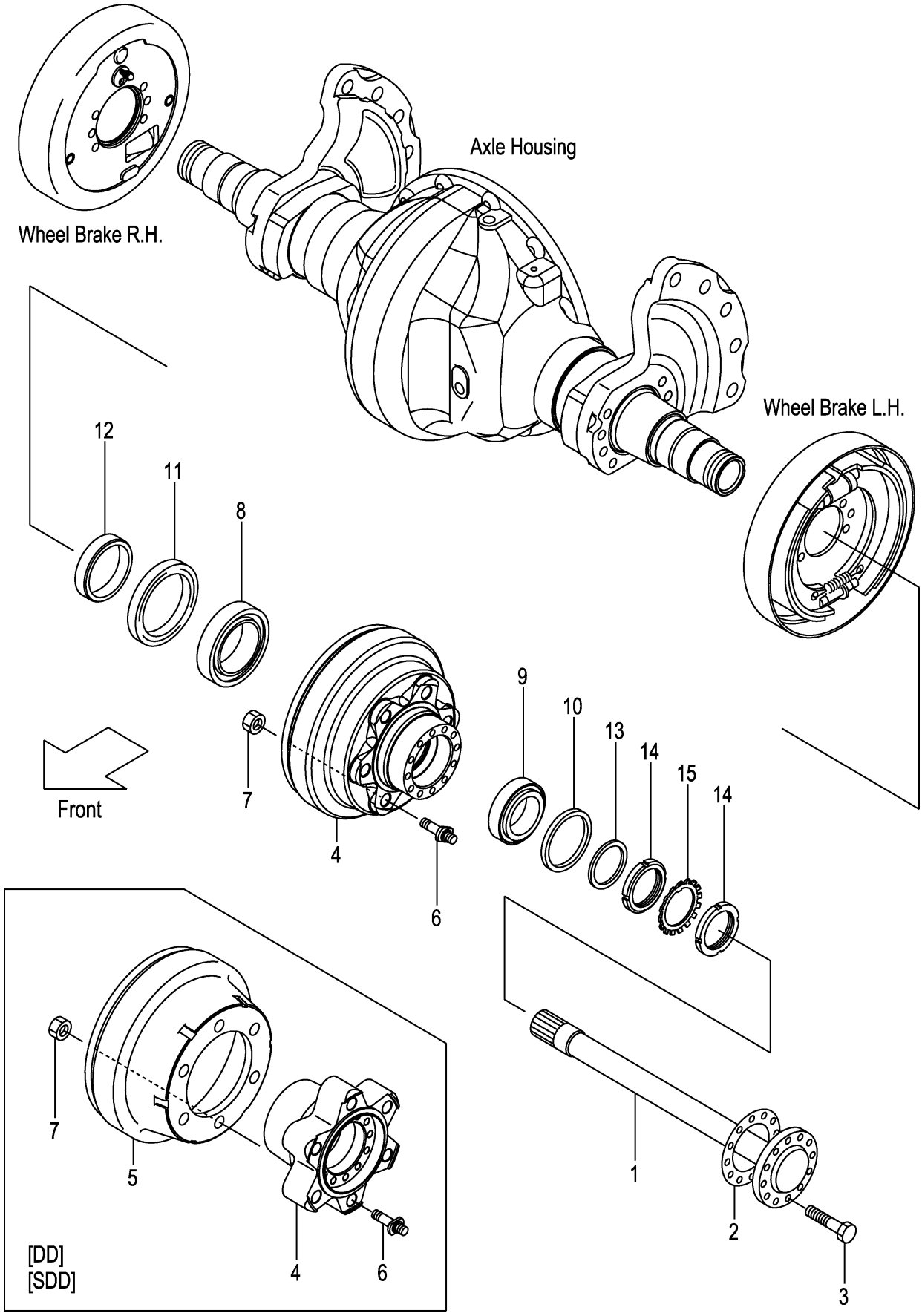

A:FD20C3Z FD20T3Z FD25C3Z FD25T3Z

Item No	Part No.	Mark	Description		Req'd	Remarks : Serial No.
1	214A3-02011		SHAFT,DRIVE	ｼｬﾌﾄ	2	
2	24453-02102		PACKING	ﾊﾟｯｷﾝｸﾞ	2	
3	24453-02061		BOLT,REAMER	ﾎﾞﾙﾄ	24	
4	22N53-02001		HUB & DRUM	ﾊﾌﾞ&ﾄﾞﾗﾑ	2	1-115
-	239A3-02001		HUB & DRUM	ﾊﾌﾞ&ﾄﾞﾗﾑ	2	116-
-	52N57-42101		HUB,FRONT	ﾊﾌﾞ	2	1-115
						[DD][SDD]
-	514A7-42002		HUB	ﾊﾌﾞ	2	116-
5	53657-42081		DRUM,BRAKE	ﾄﾞﾗﾑ	2	[DD][SDD]
6	24353-72001		BOLT,HUB	ﾎﾞﾙﾄ	12	
-	53657-42091		BOLT,HUB	ﾎﾞﾙﾄ	12	[DD][SDD]
7	01400-10020		NUT	ﾅｯﾄ	12	
8	03071-30214		BRG,TAPER-ROLLER	ﾍﾞｱﾘﾝｸﾞ	2	
9	23453-02071		BRG,TAPER-ROLLER	ﾍﾞｱﾘﾝｸﾞ	2	INC.10
10	23453-02131		SEAL,OIL	ｼｰﾙ	2	
11	03211-09501		SEAL,OIL	ｼｰﾙ	2	1-115
-	23653-02001		SEAL,OIL	ｼｰﾙ	2	116-
12	22N53-02071		RETAINER,OIL-SEAL	ﾘﾃｰﾅ	2	1-115
-	22N53-03071		RETAINER,OIL-SEAL	ﾘﾃｰﾅ	2	116-
13	23453-02091		WASHER	ﾜｯｼｬ	2	
14	03192-00012		NUT,BRG	ﾅｯﾄ	4	
15	03192-10012		WASHER,BRG	ﾜｯｼｬ	2	

FIG.65 PROPELLER SHAFT

(F7Z23310) ﾌﾟﾛﾍﾟﾗｼｬﾌﾄ

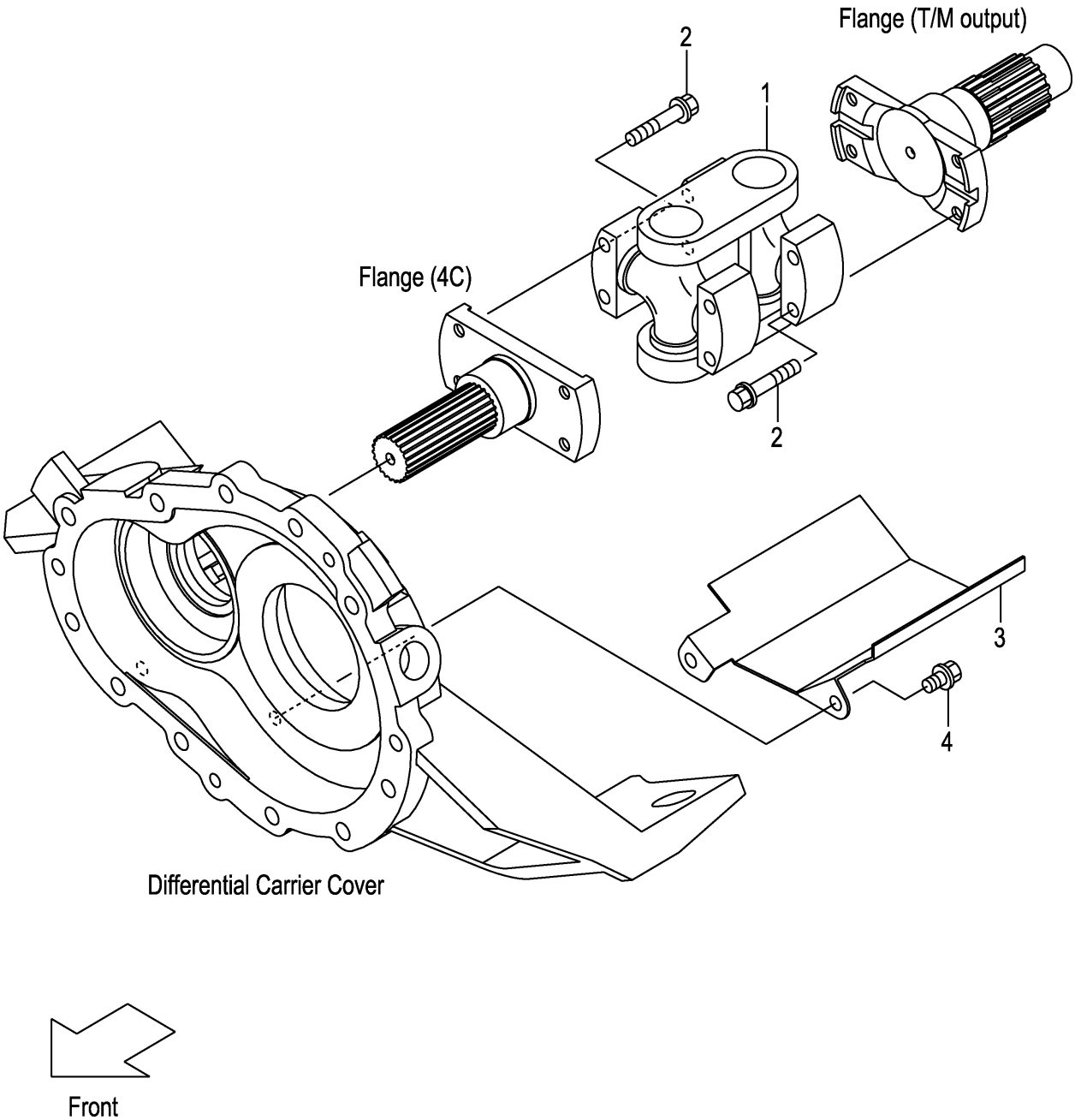

A:FD20C3Z FD20T3Z FD25C3Z FD25T3Z

Item No	Part No.	Mark	Description	Req'd	Remarks : Serial No.
1	12N53-32001		SHAFT,PROPELLER ｼｬﾌﾄ	1	
2	12N53-82641		BOLT,FLANGE ﾎﾞﾙﾄ	8	
3	12N53-32011		COVER,PROPEL-SHAFT ｶﾊﾞｰ	1	
4	12N53-82621		BOLT,FLANGE ﾎﾞﾙﾄ	2	

FIG.66 REDUCTION & DIFFERENTIAL

(F7Z23510) ﾘﾀﾞｸｼｮﾝ&ﾃﾞﾌｧﾚﾝｼｬﾙ

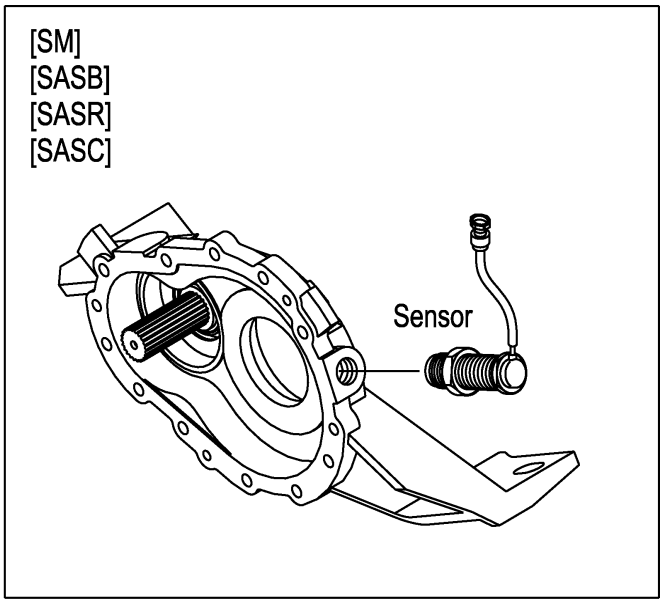

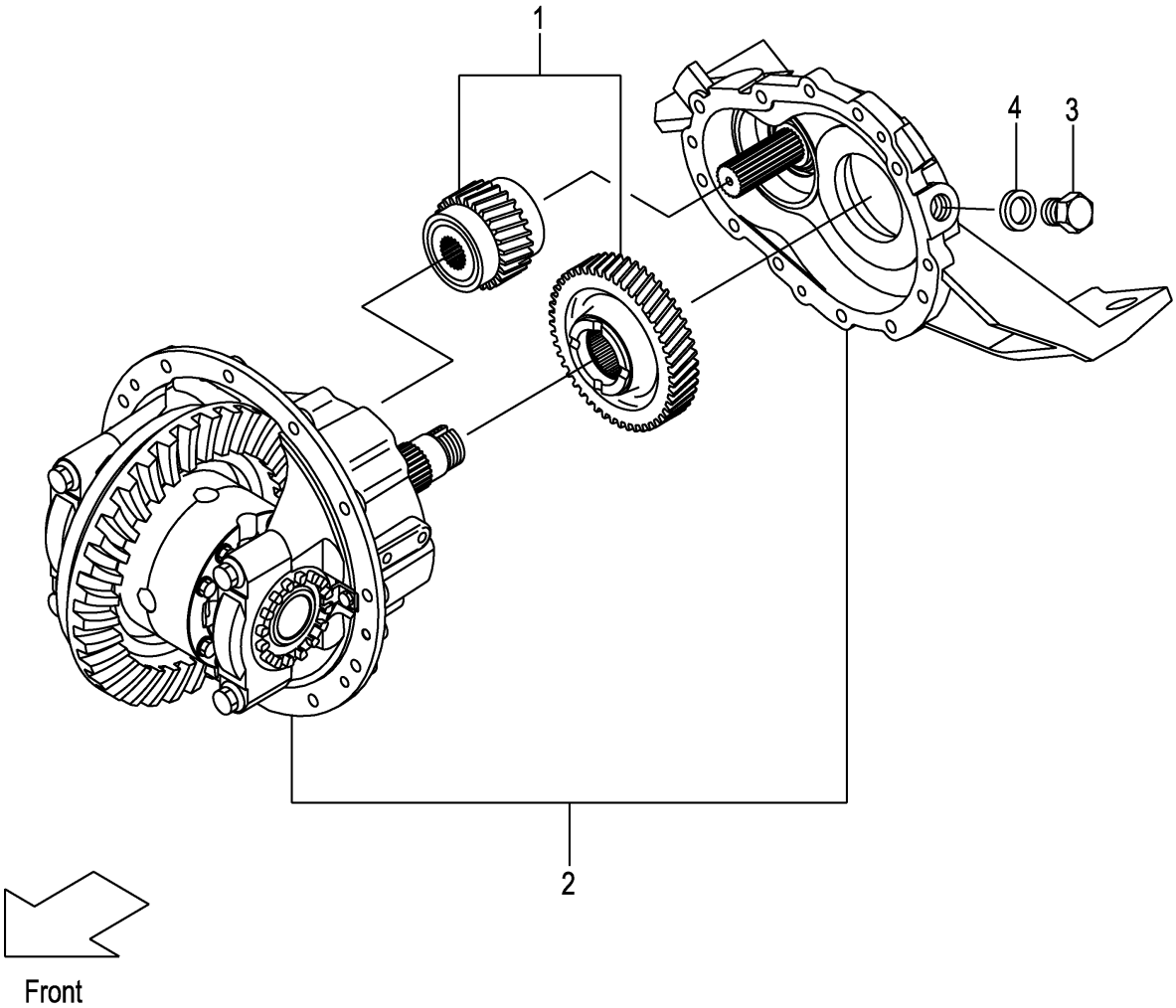

A:FD20C3Z FD20T3Z FD25C3Z FD25T3Z

Item No	Part No.	Mark	Description		Req'd	Remarks : Serial No.
A1	12N53-50201		DIFFERENTIAL-ASSY	ﾃﾞﾌｧﾚﾝｼｬﾙｱｯｾﾝ	1	INC.1,2
-	12N53-50231		DIFFERENTIAL-ASSY	ﾃﾞﾌｧﾚﾝｼｬﾙｱｯｾﾝ	1	[DNS] INC.1,2
1	NO PART NO.		REDUCTION	ﾘﾀﾞｸｼｮﾝ	1	SEE FIG.67
2	NO PART NO.		DIFFERENTIAL	ﾃﾞﾌｧﾚﾝｼｬﾙ	1	SEE FIG.68
-	NO PART NO.		DIFFERENTIAL	ﾃﾞﾌｧﾚﾝｼｬﾙ	1	[DNS]SEE FIG.68
3	124T3-42651		BOLT	ﾎﾞﾙﾄ	1	(WITHOUT SM,SASB,SASR,SASC)
4	124T3-42661		PACKING	ﾊﾟｯｷﾝｸﾞ	1	(WITHOUT SM,SASB,SASR,SASC)

FIG.67 REDUCTION

(F7Z23520) ﾘﾀﾞｸｼｮﾝ

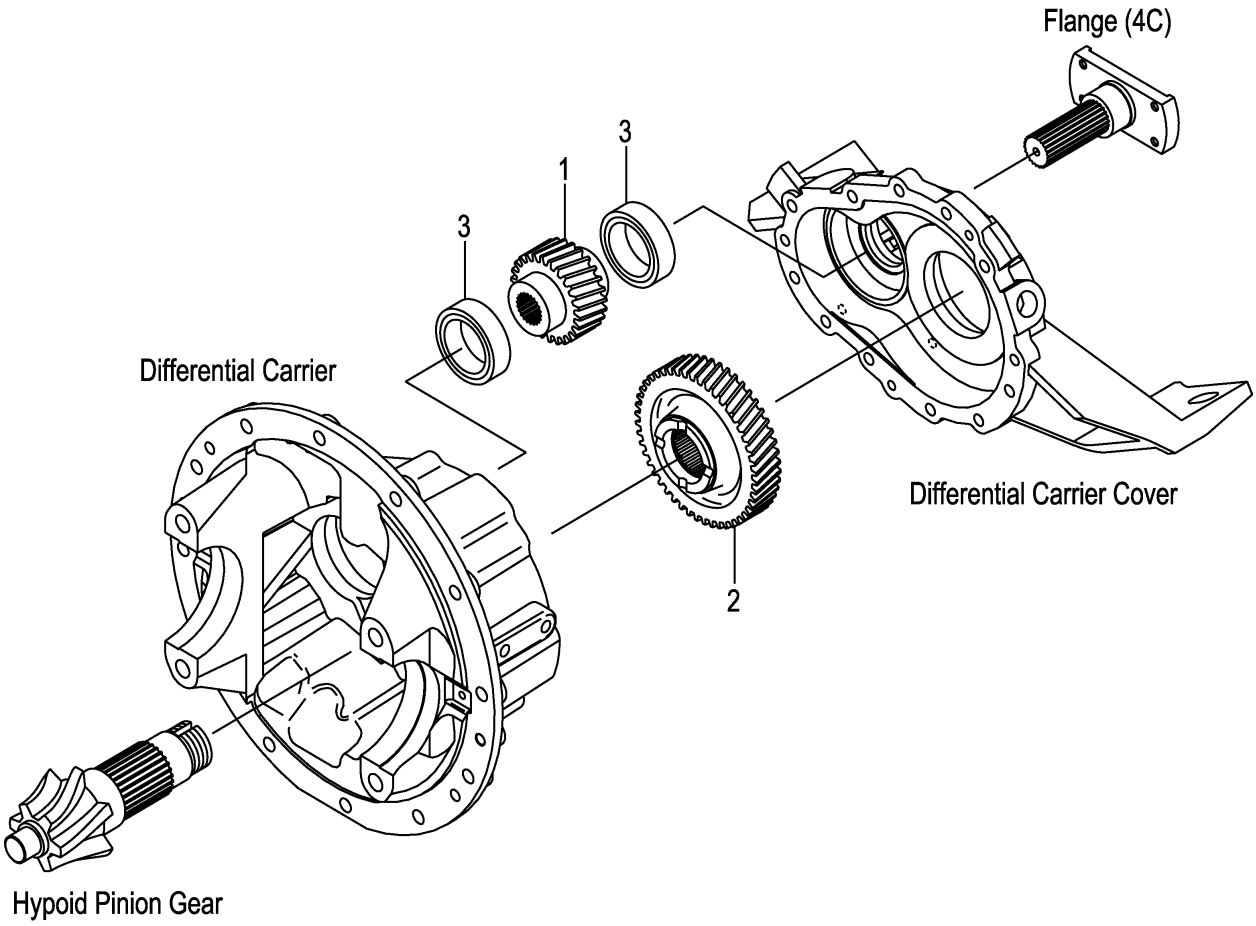

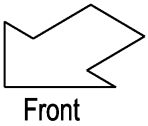

FIG.67

(F7Z23520)

A:FD20C3Z FD20T3Z FD25C3Z FD25T3Z

Item No	Part No.	Mark	Description	Req'd	Remarks : Serial No.
1	12N53-22001		GEAR,REDUCTION ｷﾞﾔｰ	1	
2	12N53-22011		GEAR,REDUCTION ｷﾞﾔｰ	1	
3	03000-06210		BRG,BALL ﾍﾞｱﾘﾝｸﾞ	2	

FIG.68 DIFFERENTIAL

(F7Z23530) デ゛ファレンシャル

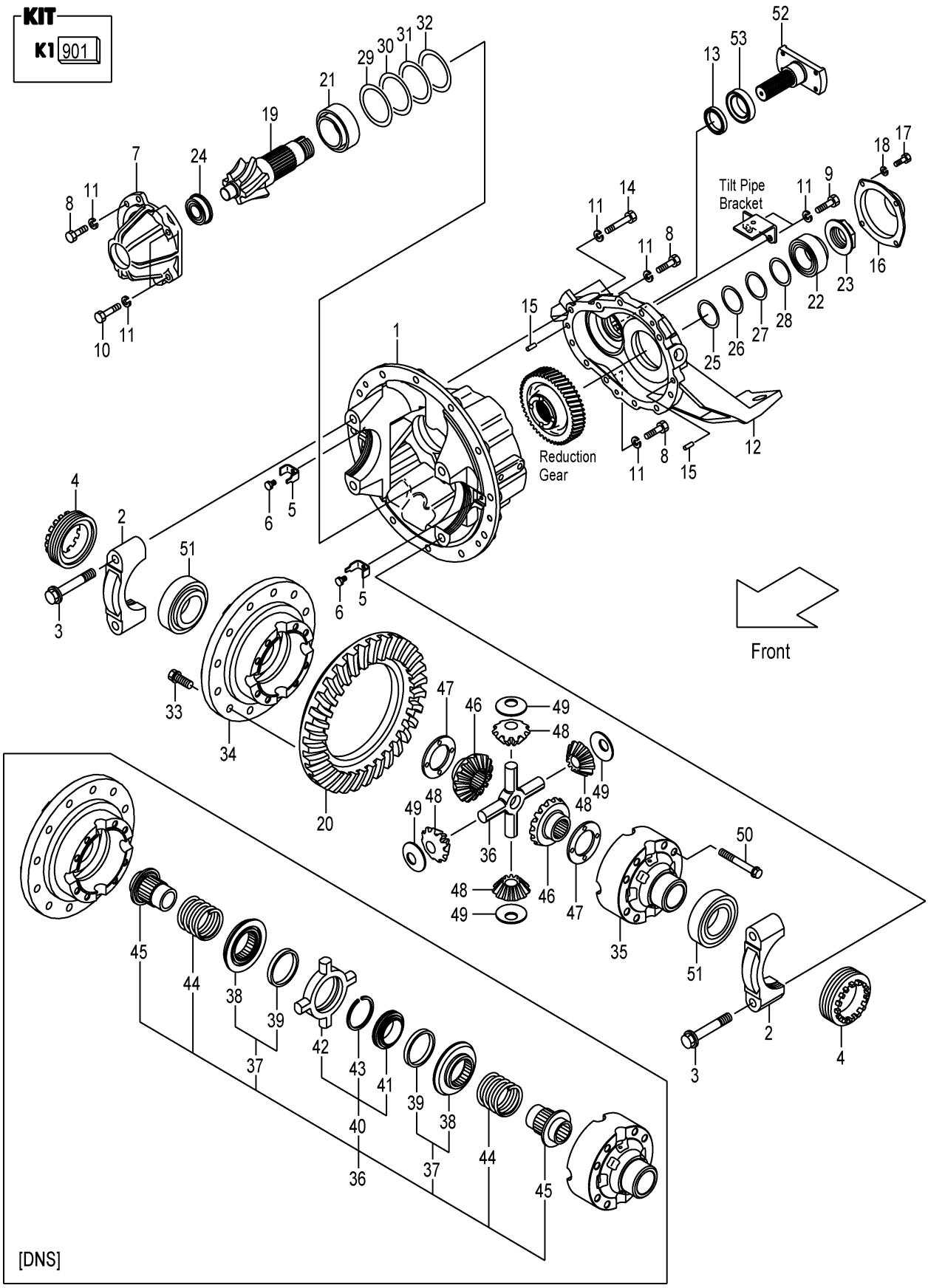

A:FD20C3Z FD20T3Z FD25C3Z FD25T3Z

Item No	Part No.	Mark	Description		Req'd	Remarks : Serial No.
901	12N53-59821	K1	KIT,OVERHAUL,DIFF	ｵｰﾊﾞﾎｰﾙｷｯﾄ	1	1-115
						INC.5,13,23,25-32,47,49
-	12N53-59822	K1	KIT,OVERHAUL,DIFF	ｵｰﾊﾞﾎｰﾙｷｯﾄ	1	116-
						INC.5,13,23,25-32,47,49
A1	12N53-50301		CARRIER & CAP-ASSY	ｷｬﾘｱ&ｷｬｯﾌﾟｱｯｾﾝ	1	INC.1-3
1	NO PART NO.	#	CARRIER,DIFFERENTIAL	ｷｬﾘｱ	1	
2	NO PART NO.	#	CAP,BRG	ｷｬｯﾌﾟ	2	
3	12N53-52131		BOLT,REAMER	ﾎﾞﾙﾄ	4	
4	12N53-52081		NUT,ADJUST	ﾅｯﾄ	2	1-169
-	10A73-52231		NUT,ADJUST	ﾅｯﾄ	2	170-
5	12N53-52141	*	PLATE,LOCK	ﾌﾟﾚｰﾄ	2	1-115
-	12N53-52142	*	PLATE,LOCK	ﾌﾟﾚｰﾄ	2	116-
6	12N53-82621		BOLT,FLANGE	ﾎﾞﾙﾄ	2	
7	12N53-52061		SUPPORT,BRG	ｻﾎﾟｰﾄ	1	
8	01106-10030		BOLT	ﾎﾞﾙﾄ	6	
9	01106-10035		BOLT	ﾎﾞﾙﾄ	2	
10	01106-10045		BOLT	ﾎﾞﾙﾄ	2	
11	02011-00010		WASHER	ﾜｯｼｬ	17	
12	12N53-52031		COVER,DIFF-CARRIER	ｶﾊﾞｰ	1	
13	12N53-52251	*	SEAL,OIL	ｼｰﾙ	1	
14	01106-10060		BOLT	ﾎﾞﾙﾄ	7	
15	02212-10020		PIN,PARALLEL	ﾋﾟﾝ	2	
16	12N53-52111		COVER,PINION	ｶﾊﾞｰ	1	
17	01103-08016		BOLT	ﾎﾞﾙﾄ	4	
18	02011-00008		WASHER	ﾜｯｼｬ	4	
A2	12N53-59801		GEAR-ASSY,HYPOID	ﾊｲﾎﾟｲﾄﾞｷﾞｬｰｱｯｾﾝ	1	INC.19,20
19	NO PART NO.	#	GEAR,PINION,LH	ｷﾞﾔｰ	1	
20	NO PART NO.	#	GEAR,RING,RH	ｷﾞﾔｰ	1	
21	14603-52131		BRG,TAPER-ROLLER	ﾍﾞｱﾘﾝｸﾞ	1	
22	12N53-52231		BRG,TAPER-ROLLER	ﾍﾞｱﾘﾝｸﾞ	1	
23	12N53-52101	*	NUT,PINION	ﾅｯﾄ	1	
24	12N53-52341		BRG,ROLLER	ﾍﾞｱﾘﾝｸﾞ	1	
25	12N53-52171	*	SHIM,T-0.1	ｼﾑ	1	
26	12N53-52271	*	SHIM,T-0.15	ｼﾑ	1	
27	12N53-52181	*	SHIM,T-0.2	ｼﾑ	2	
28	12N53-52191	*	SHIM,T-0.5	ｼﾑ	1	
29	12N53-52201	*	SHIM,T-0.1	ｼﾑ	1	
30	12N53-52291	*	SHIM,T-0.15	ｼﾑ	1	
31	12N53-52211	*	SHIM,T-0.2	ｼﾑ	2	
32	12N53-52221	*	SHIM,T-0.5	ｼﾑ	1	
33	12N53-52151		BOLT,FLANGE	ﾎﾞﾙﾄ	12	
A3	12N53-59811		CASE-ASSY,CROSS	ｸﾛｽｹｰｽｱｯｾﾝ	1	INC.34,35
34	NO PART NO.	#	CASE,CROSS,RH	ｹｰｽ	1	
35	NO PART NO.	#	CASE,CROSS,LH	ｹｰｽ	1	
36	124G3-52011		SPIDER	ｽﾊﾟｲﾀﾞ	1	
-	12N53-52381		NOSPIN	ﾉｰｽﾋﾟﾝ	1	[DNS] INC.37-45
37	12N53-52431		CLUTCH,DRIVEN	ｸﾗｯﾁ	2	[DNS] INC.38,39
38	12N53-52441		CLUTCH,DRIVEN	ｸﾗｯﾁ	2	[DNS]
39	12N53-52451		RING,HOLDOUT	ﾘﾝｸﾞ	2	[DNS]
40	12N53-52461		SPIDER	ｽﾊﾟｲﾀﾞ	1	[DNS] INC.41-43

FIG.68 DIFFERENTIAL

(F7Z23530) デ゛ファレンシャル

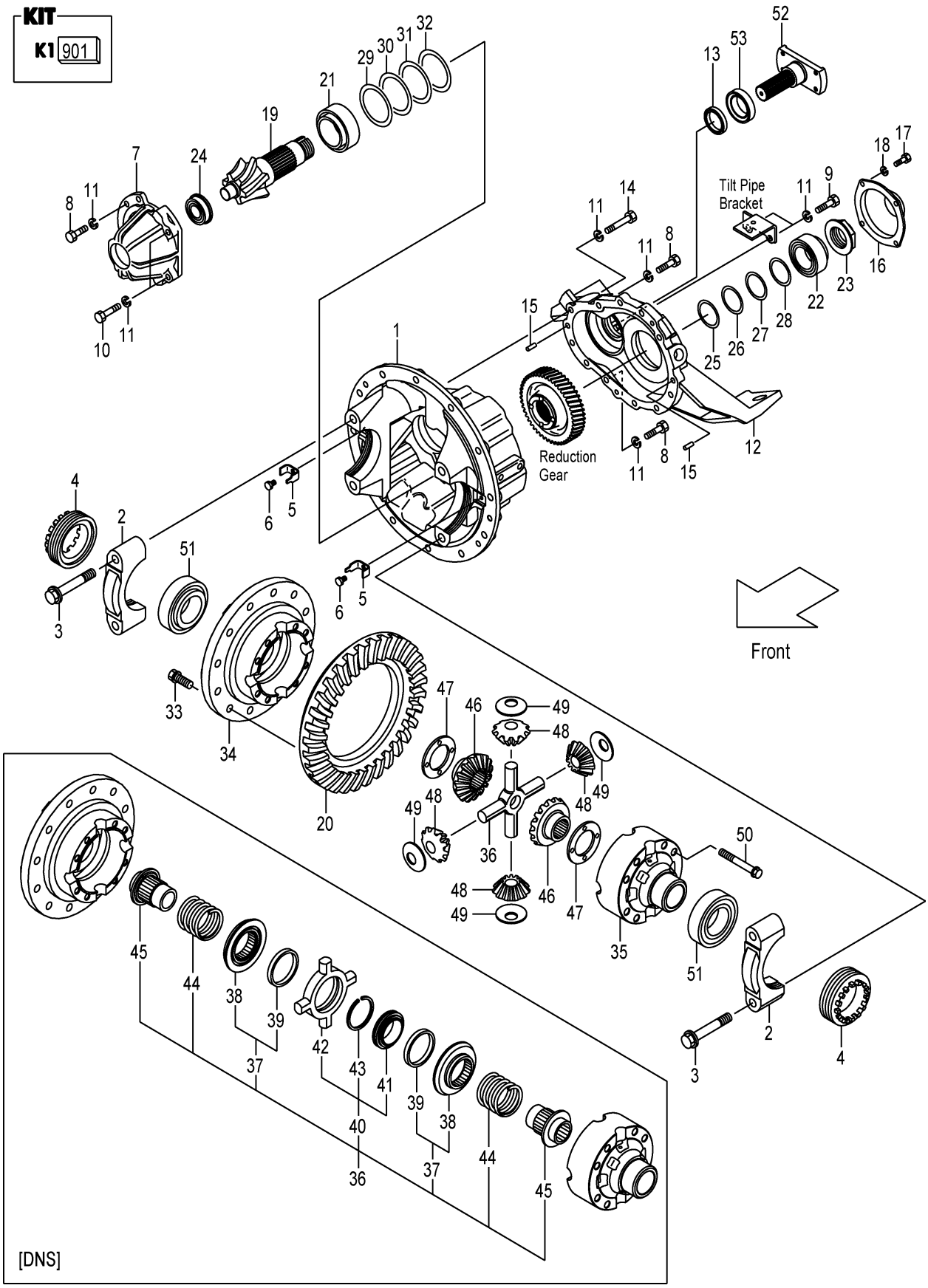

A:FD20C3Z FD20T3Z FD25C3Z FD25T3Z

Item No	Part No.	Mark	Description		Req'd	Remarks : Serial No.
41	12N53-52471		CAM,CENTER	ｶﾑ	1	[DNS]
42	12N53-52481		SPIDER	ｽﾊﾟｲﾀﾞ	1	[DNS]
43	12N53-52491		RING,SNAP	ﾘﾝｸﾞ	1	[DNS]
44	12N53-52501		SPRING	ｽﾌﾟﾘﾝｸﾞ	2	[DNS]
45	12N53-52511		GEAR,SIDE	ｷﾞﾔｰ	2	[DNS]
46	134A3-52041		GEAR,SIDE	ｷﾞﾔｰ	2	(WITHOUT DNS)
47	16113-52141	*	WASHER,THRUST	ﾜｯｼｬ	2	(WITHOUT DNS)
48	134A3-52051		GEAR,PINION	ｷﾞﾔｰ	4	(WITHOUT DNS)
49	16113-52121	*	WASHER,THRUST	ﾜｯｼｬ	4	(WITHOUT DNS)
50	12N53-52161		BOLT,FLANGE	ﾎﾞﾙﾄ	8	
51	12N53-52241		BRG,TAPER-ROLLER	ﾍﾞｱﾘﾝｸﾞ	2	
52	12N53-52091		FLANGE,4C	ﾌﾗﾝｼﾞ	1	
53	12N53-52121		COVER,DUST	ｶﾊﾞｰ	1	

FIG.69 WHEEL BRAKE

(F7Z23710) ホイールブレーキ

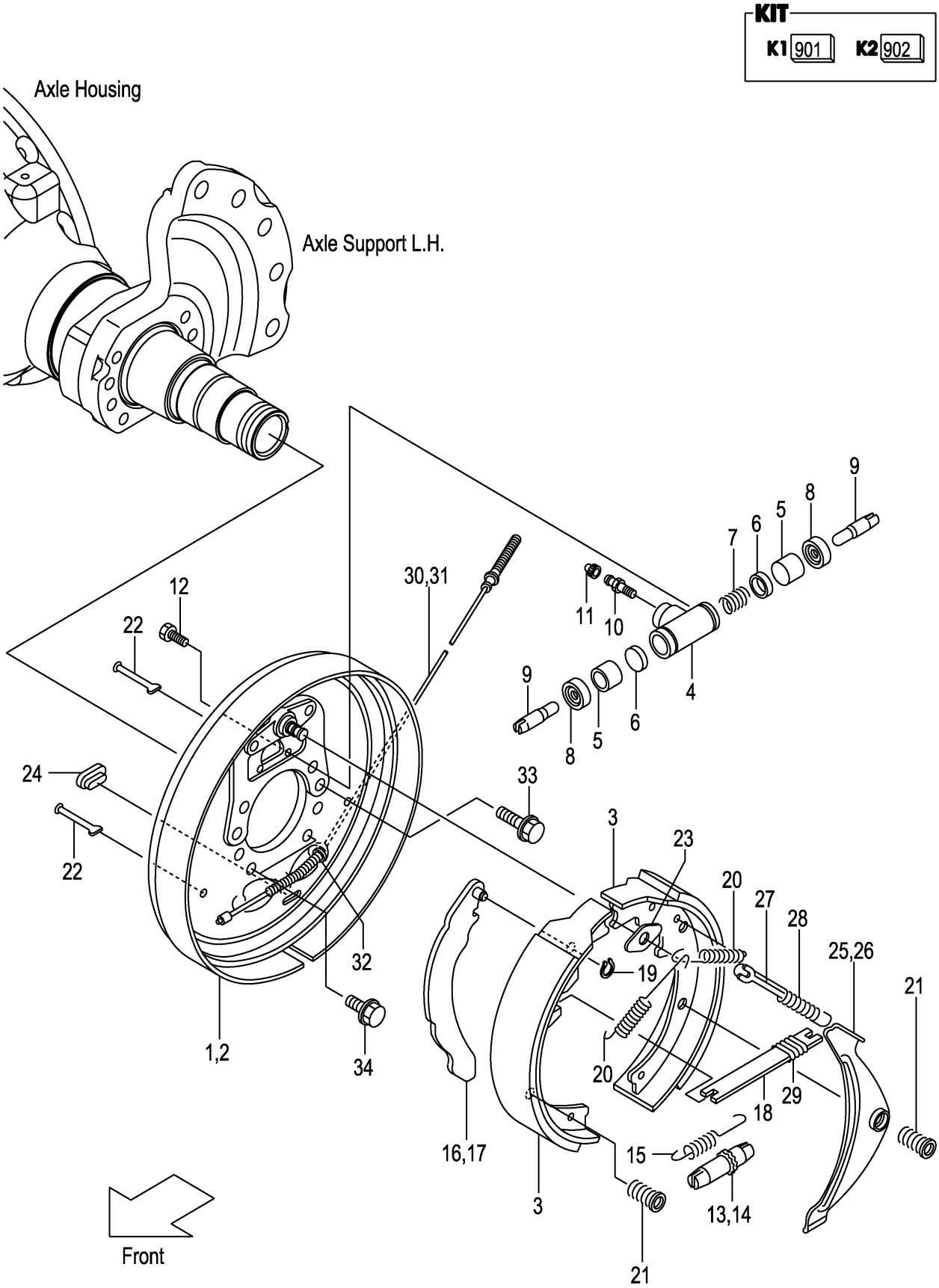

A:FD20C3Z FD20T3Z FD25C3Z FD25T3Z

Item No	Part No.	Mark	Description		Req'd	Remarks : Serial No.
A1	22N53-70101		BRAKE-ASSY,RH	ﾌﾞﾚｰｷｱｯｾﾝ	1	INC.1,3-13,15,16,18-25, 27-30,32
A2	22N53-70201		BRAKE-ASSY,LH	ﾌﾞﾚｰｷｱｯｾﾝ	1	INC.2-12,14,15,17-24,26-29, 31,32
901	522A2-61561	K1	KIT,BRAKE-SHOE	ﾌﾞﾚｰｷｼｭｰｷｯﾄ	2	INC.3
1	234A3-72021		PLATE,BACK,RH	ﾌﾟﾚｰﾄ	1	
2	234A3-72031		PLATE,BACK,LH	ﾌﾟﾚｰﾄ	1	
3	NO PART NO.	#*	SHOE,BRAKE	ｼｭｰ	4	
A3	234A3-72001		CYL-ASSY,WHEEL	ﾎｲｰﾙｼﾘﾝﾀﾞｱｯｾﾝ	2	INC.4-11
902	22673-79801	K2	KIT,OVERHAUL	ｵｰﾊﾞﾎｰﾙｷｯﾄ	2	INC.5-8
4	NO PART NO.	#	BODY,WHEEL-CYL	ﾎﾞﾃﾞｨ	2	
5	NO PART NO.	#*	PISTON	ﾋﾟｽﾄﾝ	4	
6	NO PART NO.	#*	CUP,PISTON	ｶｯﾌﾟ	4	
7	NO PART NO.	#*	SPRING	ｽﾌﾟﾘﾝｸﾞ	2	
8	NO PART NO.	#*	COVER,DUST	ｶﾊﾞｰ	4	
9	22673-72111		ROD,PISTON	ﾛｯﾄﾞ	4	
10	22673-72131		SCREW,BLEEDER	ｽｸﾘｭ	2	
11	22673-72141		CAP,BLEEDER-SCREW	ｷｬｯﾌﾟ	2	
12	22673-72161		BOLT	ﾎﾞﾙﾄ	4	
13	238P3-72041		ADJUSTER,RH	ｱｼﾞｬｽﾀ	1	
14	238P3-72051		ADJUSTER,LH	ｱｼﾞｬｽﾀ	1	
15	23653-72051		SPRING,ADJUSTER	ｽﾌﾟﾘﾝｸﾞ	2	
16	23653-72062		LEVER,BRAKE,RH	ﾚﾊﾞｰ	1	
17	23653-72072		LEVER,BRAKE,LH	ﾚﾊﾞｰ	1	
18	23653-72081		STRUT	ｽﾄﾗｯﾄ	2	
19	22673-72252		RETAINER	ﾘﾃｰﾅ	2	
20	22673-72261		SPRING,SHOE-RETURN	ｽﾌﾟﾘﾝｸﾞ	4	
21	234A3-72101		SPRING,SHOE-HOLD	ｽﾌﾟﾘﾝｸﾞ	8	
22	23653-72101		PIN,SHOE-HOLD	ﾋﾟﾝ	8	
23	23653-72131		PLATE,SHOE-GUIDE	ﾌﾟﾚｰﾄ	2	
24	22673-72321		PLUG,RUBBER	ﾌﾟﾗｸﾞ	2	
25	23653-72142		LEVER,PAWL,RH	ﾚﾊﾞｰ	1	
26	23653-72152		LEVER,PAWL,LH	ﾚﾊﾞｰ	1	
27	23653-72161		STOPPER,PAWL-LEVER	ｽﾄｯﾊﾟ	2	
28	23653-72171		SPRING,ACTUATOR	ｽﾌﾟﾘﾝｸﾞ	2	
29	22673-72391		SPRING,ANTIRATTLE	ｽﾌﾟﾘﾝｸﾞ	2	
30	22N53-72001		CABLE,CONTROL,RH	ｹｰﾌﾞﾙ	1	
31	271G3-72001		CABLE,CONTROL,LH	ｹｰﾌﾞﾙ	1	
32	23653-72201		RETAINER	ﾘﾃｰﾅ	2	
33	22N53-02212		BOLT	ﾎﾞﾙﾄ	12	
34	22N53-02201		BOLT	ﾎﾞﾙﾄ	4	

FIG.70 STEERING WHEEL UNIT

(F7Z24110) ｽﾃｱﾘﾝｸﾞﾎｲｰﾙﾕﾆｯﾄ

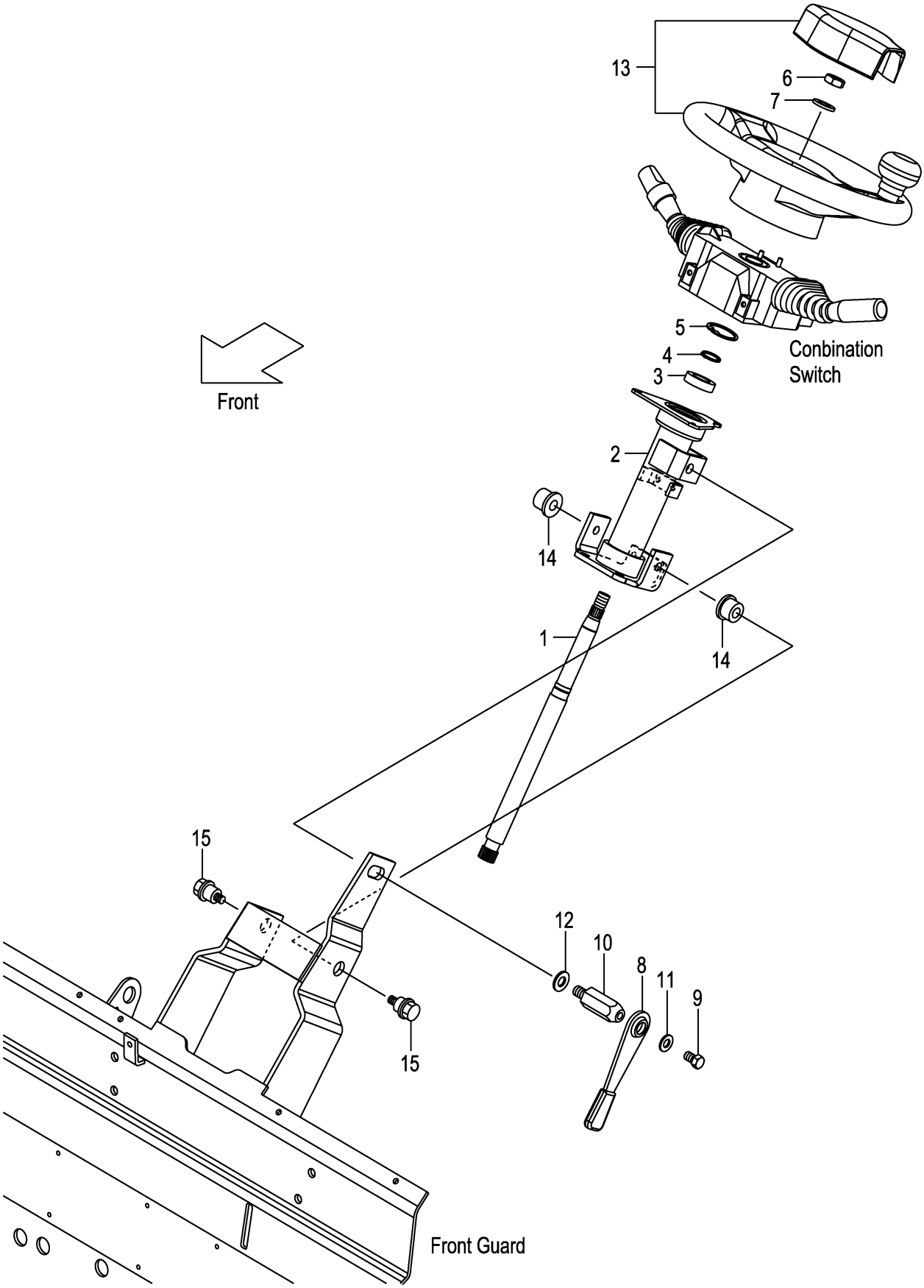

A:FD20C3Z FD20T3Z FD25C3Z FD25T3Z

Item No	Part No.	Mark	Description		Req'd	Remarks : Serial No.
1	22N54-12011		SHAFT,STEERING	ｼｬﾌﾄ	1	
2	22N54-12022		TUBE,STEERING-COLUMN	ﾁｭｰﾌﾞ	1	
3	03020-06904		BRG,BALL	ﾍﾞｱﾘﾝｸﾞ	1	
4	02100-00020		RING,SNAP	ﾘﾝｸﾞ	1	
5	02110-00037		RING,SNAP	ﾘﾝｸﾞ	1	
6	01402-10014		NUT	ﾅｯﾄ	1	
7	02000-00014		WASHER	ﾜｯｼｬ	1	
A1	239A4-12402		LEVER-ASSY,TILT-LOCK	ﾃｨﾙﾄﾛｯｸﾚﾊﾞｰｱｯｾﾝ	1	INC.8-11
8	239A4-12411		LEVER	ﾚﾊﾞｰ	1	
9	239A4-12441		BOLT	ﾎﾞﾙﾄ	1	
10	239A4-12431		BOLT,LOCK	ﾎﾞﾙﾄ	1	
11	214A4-12161		WASHER	ﾜｯｼｬ	1	
12	02000-00012		WASHER	ﾜｯｼｬ	1	
13	22N54-10201		WHEEL,STEERING	ﾎｲｰﾙ	1	SEE FIG.71
14	216G4-12101		BUSHING	ﾌﾞｯｼﾝｸﾞ	2	
15	216G4-12111		BOLT	ﾎﾞﾙﾄ	2	

FIG.71 STEERING WHEEL

(F7Z24130) ｽﾃｱﾘﾝｸﾞﾎｲｰﾙ

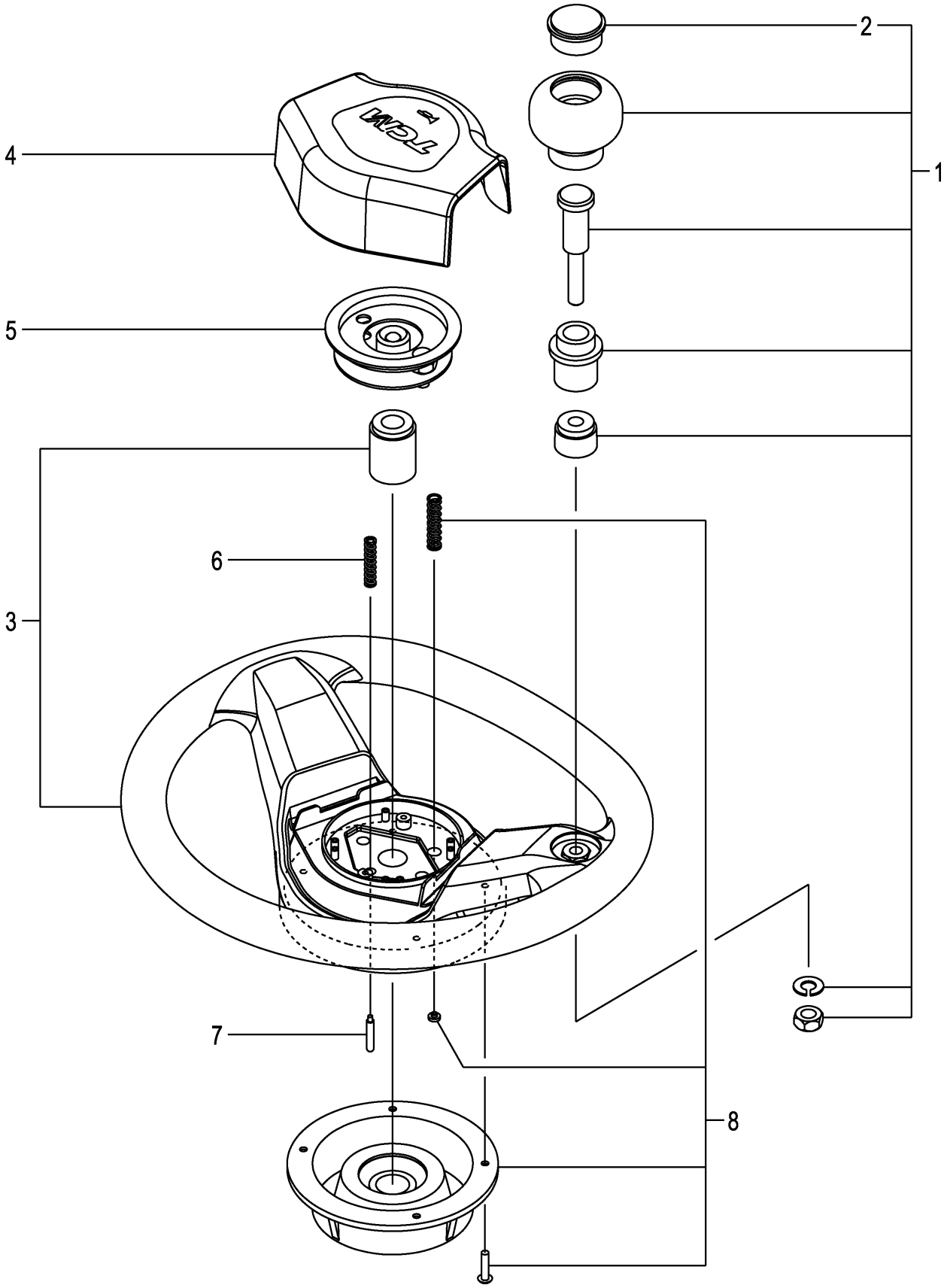

FIG.71

(F7Z24130)

A:FD20C3Z FD20T3Z FD25C3Z FD25T3Z

Item No	Part No.	Mark	Description		Req'd	Remarks : Serial No.
A1	22N54-10201		WHEEL-ASSY,STEERING	ｽﾃｱﾘﾝｸﾞﾎｲｰﾙｱｯｾﾝ	1	INC.1-8
1	216G4-12681		KNOB	ﾉﾌﾞ	1	INC.2
2	216G4-12711		CAP	ｷｬｯﾌﾟ	1	
3	NO PART NO.	#	WHEEL,STEERING	ﾎｲｰﾙ	1	
4	22N54-12411		PAD,HORN	ﾊﾟｯﾄﾞ	1	
5	22N54-13001		SWITCH	ｽｲｯﾁ	1	
6	22N54-13031		SPRING	ｽﾌﾟﾘﾝｸﾞ	1	
7	22N54-13021		PLUNGER	ﾌﾟﾗﾝｼﾞｬ	1	
8	209K4-12551		COVER,CANCEL-CAM	ｶﾊﾞｰ	1	

FIG.72 ORBITROL

(F7Z24120) オービットロール

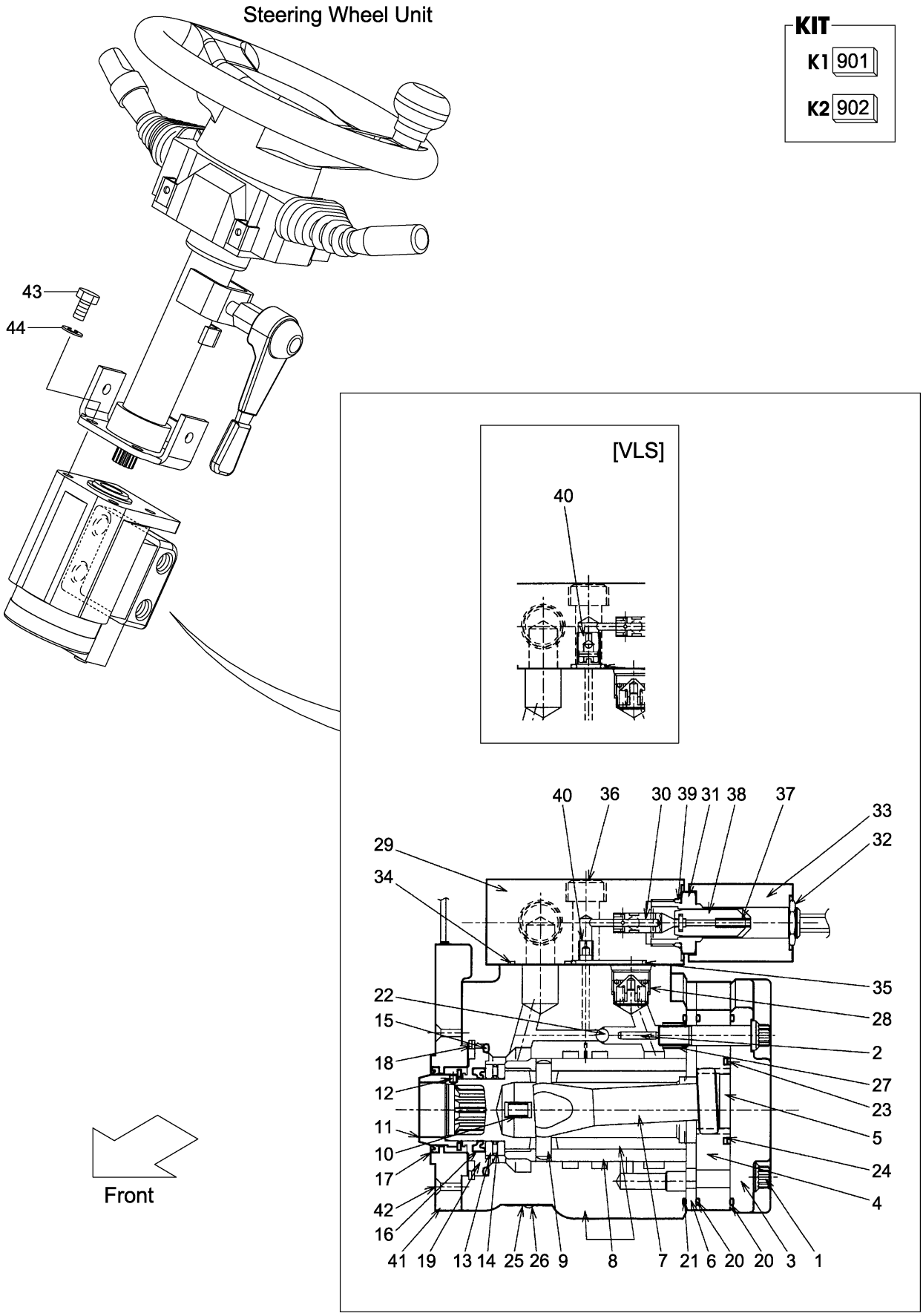

A:FD20C3Z FD20T3Z FD25C3Z FD25T3Z

Item No	Part No.	Mark	Description		Req'd	Remarks : Serial No.
A1	22N54-10302		UNIT-ASSY,ORBITROL	ｵｰﾋﾞｯﾄﾛｰﾙﾕﾆｯﾄｱｯｾﾝ	1	INC.1-42
-	22N54-10312		UNIT-ASSY,ORBITROL	ｵｰﾋﾞｯﾄﾛｰﾙﾕﾆｯﾄｱｯｾﾝ	1	[VLS] INC.1-42
901	22N54-10342	K1	KIT,SEAL	ｼｰﾙｷｯﾄ	1	INC.15-17,20,21,23,24,34, 35,39
-	22N54-10352	K1	KIT,SEAL	ｼｰﾙｷｯﾄ	1	[VLS] INC.15-17,20,21,23,24,34, 35,39
902	26094-17021	K2	KIT,BRG,NEEDLE	ﾆｰﾄﾞﾙﾍﾞｱﾘﾝｸﾞｷｯﾄ	1	INC.13,14
A2	22N54-10322		ORBITROL-ASSY	ｵｰﾋﾞｯﾄﾛｰﾙｱｯｾﾝ	1	INC.1-28
1	NO PART NO.	#	SCREW	ｽｸﾘｭ	7	
2	NO PART NO.	#	PIN	ﾋﾟﾝ	1	
3	NO PART NO.	#	CAP,END	ｷｬｯﾌﾟ	1	
4	NO PART NO.	#	GEROTOR	ｼﾞﾛｰﾀ	1	
5	NO PART NO.	#	SPACER	ｽﾍﾟｰｻ	1	
6	NO PART NO.	#	PLATE	ﾌﾟﾚｰﾄ	1	
7	NO PART NO.	#	DRIVE	ﾄﾞﾗｲﾌﾞ	1	
8	NO PART NO.	#	PARTS,CONTROL	ﾊﾟｰﾂ	1	
9	NO PART NO.	#	PIN	ﾋﾟﾝ	1	
10	NO PART NO.	#	SPRING	ｽﾌﾟﾘﾝｸﾞ	4	
11	NO PART NO.	#	ROTOR	ﾛｰﾀ	1	
12	NO PART NO.	#	SCREW	ｽｸﾘｭ	1	
13	NO PART NO.	#*	BEARING	ﾍﾞｱﾘﾝｸﾞ	2	
14	NO PART NO.	#*	NEEDLE	ﾆｰﾄﾞﾙ	1	
15	NO PART NO.	#*	O-RING	Oﾘﾝｸﾞ	1	
16	NO PART NO.	#*	SEAL,OIL	ｼｰﾙ	1	
17	NO PART NO.	#*	SEAL,DUST	ｼｰﾙ	1	
18	NO PART NO.	#	RING	ﾘﾝｸﾞ	1	
19	NO PART NO.	#	BUSHING	ﾌﾞｯｼﾝｸﾞ	1	
20	NO PART NO.	#*	O-RING	Oﾘﾝｸﾞ	2	
21	NO PART NO.	#*	O-RING	Oﾘﾝｸﾞ	1	
22	NO PART NO.	#	BALL	ﾎﾞｰﾙ	1	
23	NO PART NO.	#*	SEAL,FACE	ｼｰﾙ	1	
24	NO PART NO.	#*	O-RING	Oﾘﾝｸﾞ	1	
25	NO PART NO.	#	PLATE,NAME	ﾌﾟﾚｰﾄ	1	
26	NO PART NO.	#	RIVET	ﾘﾍﾞｯﾄ	2	
27	NO PART NO.	#	SCREW	ｽｸﾘｭ	1	
28	NO PART NO.	#	VALVE,CHECK	ﾊﾞﾙﾌﾞ	1	
A3	22N54-10371		VALVE-ASSY	ﾊﾞﾙﾌﾞｱｯｾﾝ	1	INC.29-40
29	NO PART NO.	#	BLOCK,VALVE	ﾌﾞﾛｯｸ	1	
30	NO PART NO.	#	SPOOL	ｽﾌﾟｰﾙ	1	
31	NO PART NO.	#	TUBE	ﾁｭｰﾌﾞ	1	
32	NO PART NO.	#	NUT	ﾅｯﾄ	1	
33	NO PART NO.	#	COIL	ｺｲﾙ	1	
34	NO PART NO.	#*	O-RING	Oﾘﾝｸﾞ	4	
35	NO PART NO.	#*	O-RING	Oﾘﾝｸﾞ	1	
36	NO PART NO.	#	BOLT	ﾎﾞﾙﾄ	2	
37	NO PART NO.	#	SPRING	ｽﾌﾟﾘﾝｸﾞ	1	
38	NO PART NO.	#	CORE	ｺｱ	1	

FIG.72 ORBITROL

(F7Z24120) オービットロール

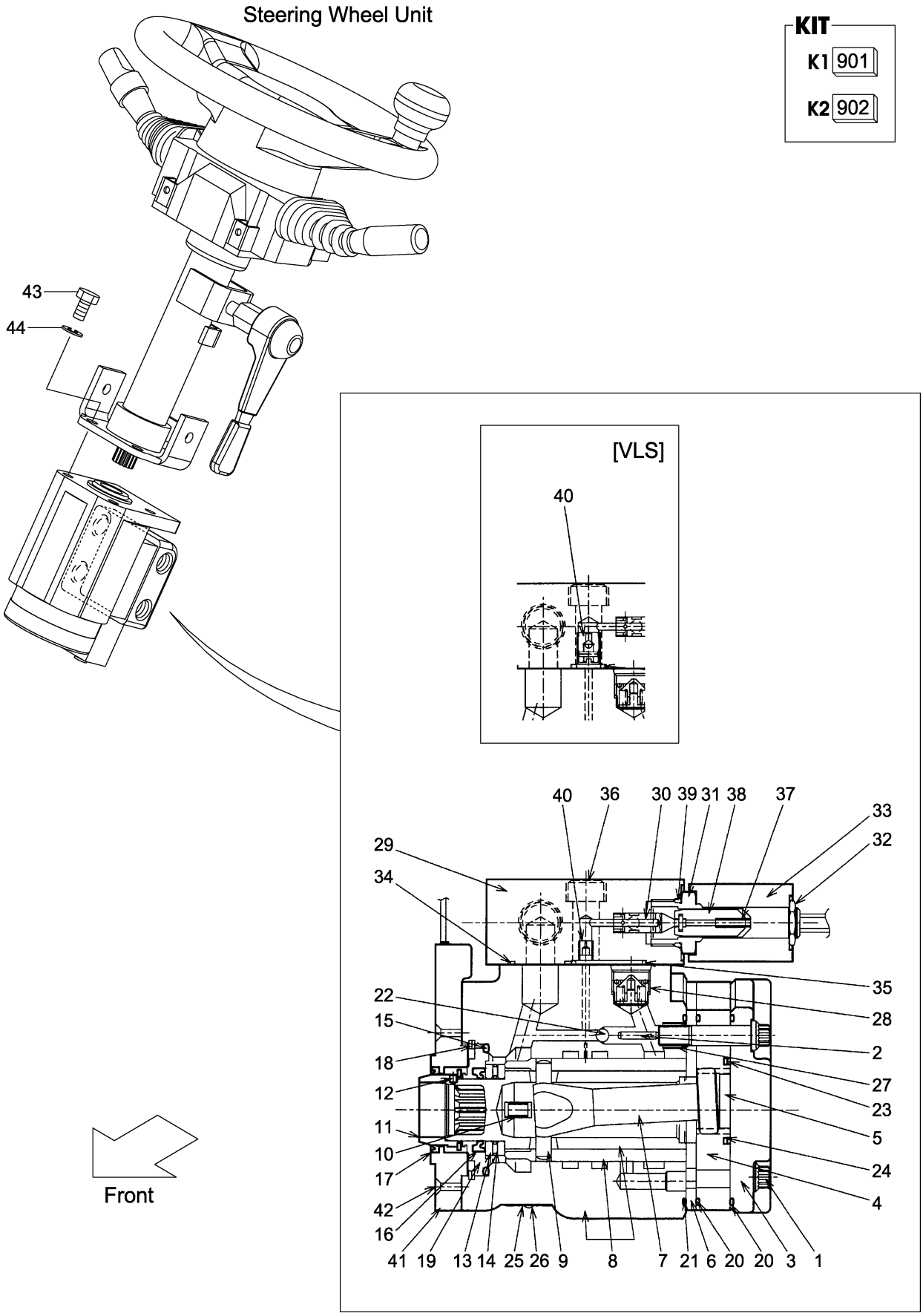

A:FD20C3Z FD20T3Z FD25C3Z FD25T3Z

Item No	Part No.	Mark	Description		Req'd	Remarks : Serial No.
39	NO PART NO.	#*	O-RING	Oﾘﾝｸﾞ	1	
40	NO PART NO.	#	PLUG	ﾌﾟﾗｸﾞ	1	
-	NO PART NO.	#	VALVE,CHECK	ﾊﾞﾙﾌﾞ	1	[VLS]
41	22N54-10361		CONTROLLER,EPACS	ｺﾝﾄﾛｰﾗ	1	
42	NO PART NO.	#	SCREW	ｽｸﾘｭ	2	
43	01113-10035		BOLT	ﾎﾞﾙﾄ	4	
44	02011-00010		WASHER	ﾜｯｼｬ	4	

FIG.73 ORBITROL FITTING

(F7Z24140) オービットロールフィッティング

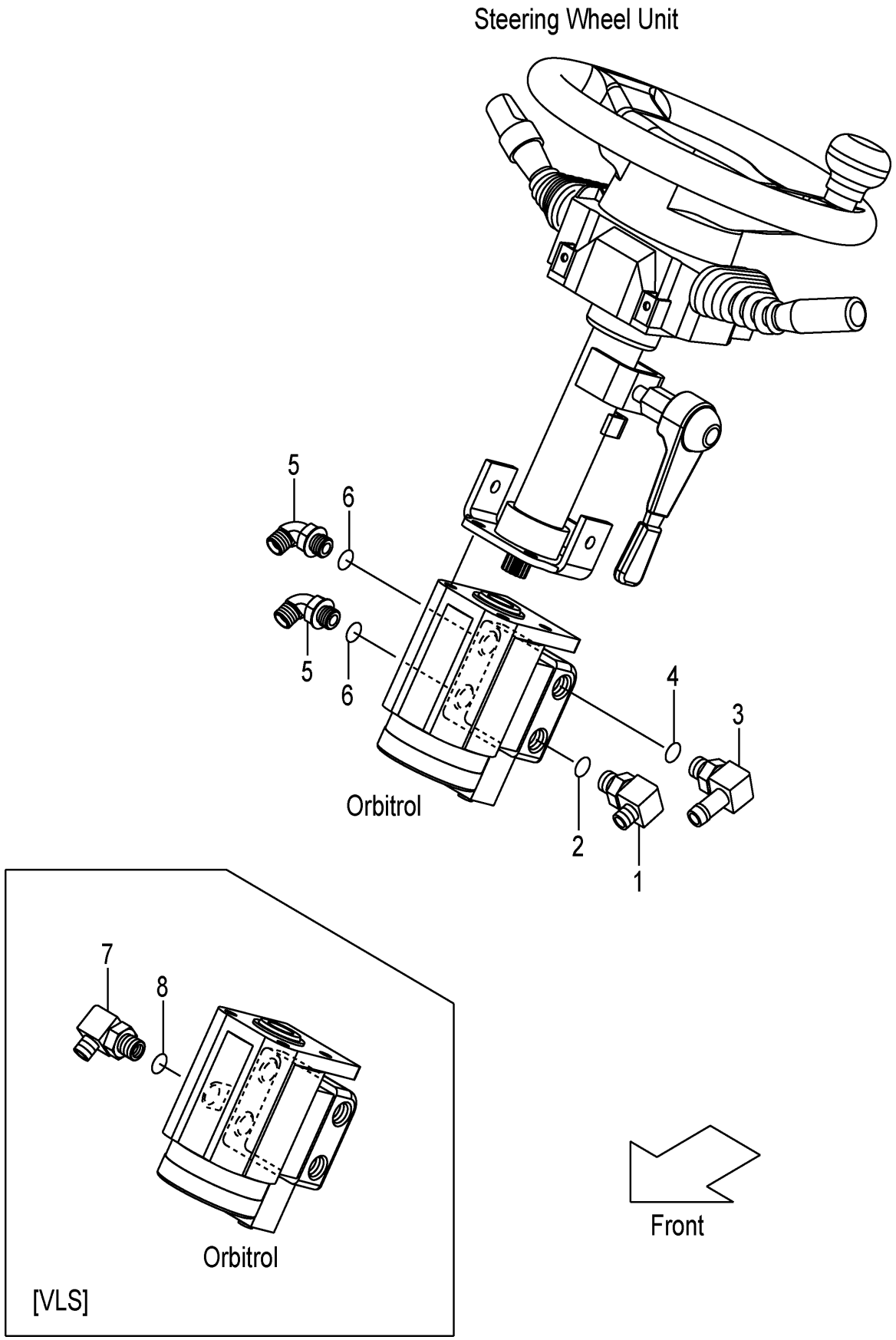

A:FD20C3Z FD20T3Z FD25C3Z FD25T3Z

Item No	Part No.	Mark	Description		Req'd	Remarks : Serial No.
A1	24237-62331		ELBOW-ASSY	ｴﾙﾎﾞｱｯｾﾝ	1	1-127
						INC.1,2
-	20387-63741		ELBOW-ASSY	ｴﾙﾎﾞｱｯｾﾝ	1	128-
						INC.1,2
1	NO PART NO.	#	ELBOW	ｴﾙﾎﾞ	1	1-127
-	NO PART NO.	#	ELBOW	ｴﾙﾎﾞ	1	128-
2	03320-00140		O-RING	Oﾘﾝｸﾞ	1	
A2	234H7-60351		FITTING-ASSY,HOSE	ﾎｰｽﾌｨｯﾃｨﾝｸﾞｱｯｾﾝ	1	INC.3,4
3	NO PART NO.	#	FITTING,HOSE	ﾌｨｯﾃｨﾝｸﾞ	1	
4	03320-00140		O-RING	Oﾘﾝｸﾞ	1	
A3	04150-20303		ELBOW-ASSY	ｴﾙﾎﾞｱｯｾﾝ	2	1-184
						INC.5,6
-	283A7-62501		ELBOW-ASSY	ｴﾙﾎﾞｱｯｾﾝ	2	185-
						INC.5,6
5	NO PART NO.	#	ELBOW	ｴﾙﾎﾞ	2	1-184
-	NO PART NO.	#	ELBOW	ｴﾙﾎﾞ	2	185-
6	03320-00140		O-RING	Oﾘﾝｸﾞ	2	
A4	04150-20202		ELBOW-ASSY	ｴﾙﾎﾞｱｯｾﾝ	1	[VLS] INC.7,8
7	NO PART NO.	#	ELBOW	ｴﾙﾎﾞ	1	[VLS]
8	03320-00110		O-RING	Oﾘﾝｸﾞ	1	[VLS]

FIG.74 STEERING AXLE

(F7Z24310) ステアリング゛アクスル

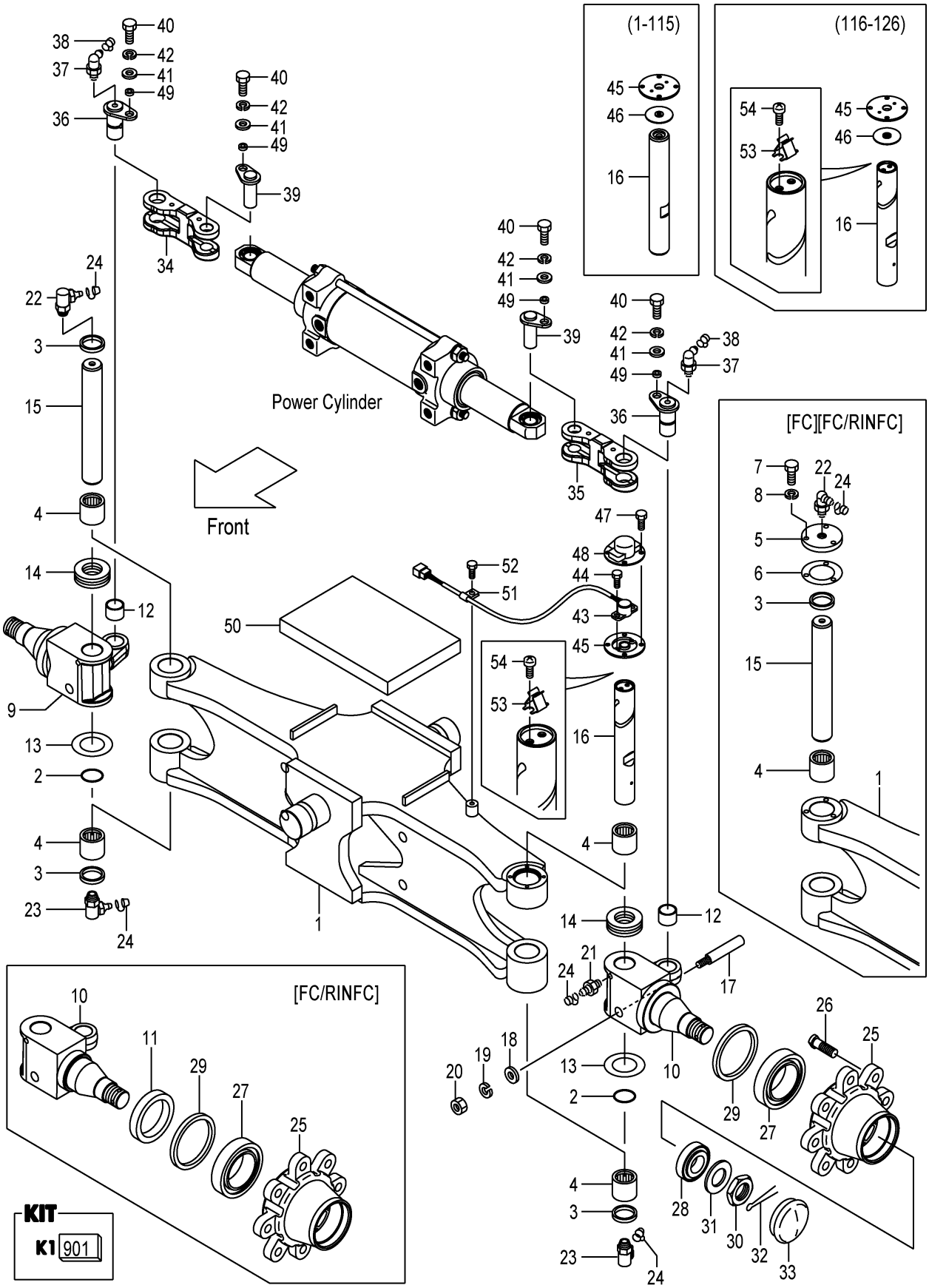

A:FD20C3Z FD20T3Z FD25C3Z FD25T3Z:1-275

Item No	Part No.	Mark	Description		Req'd	Remarks : Serial No.
A1	22N54-30102		AXLE-ASSY,STEERING	ｽﾃｱﾘﾝｸﾞｱｸｽﾙｱｯｾﾝ	1	1-115 INC.1-4,9,10,12-33
-	22N54-30103		AXLE-ASSY,STEERING	ｽﾃｱﾘﾝｸﾞｱｸｽﾙｱｯｾﾝ	1	116- INC.1-4,9,10,12-33
-	52N53-70102		AXLE-ASSY,STEERING	ｽﾃｱﾘﾝｸﾞｱｸｽﾙｱｯｾﾝ	1	1-115 [FC] INC.1-10,12-33
-	52N53-70103		AXLE-ASSY,STEERING	ｽﾃｱﾘﾝｸﾞｱｸｽﾙｱｯｾﾝ	1	116- [FC] INC.1-10,12-33
-	52N53-70202		AXLE-ASSY,STEERING	ｽﾃｱﾘﾝｸﾞｱｸｽﾙｱｯｾﾝ	1	1-115 [FC/RINFC] INC.1-33
-	52N53-70203		AXLE-ASSY,STEERING	ｽﾃｱﾘﾝｸﾞｱｸｽﾙｱｯｾﾝ	1	116- [FC/RINFC] INC.1-33
901	215E4-39801	K1	KIT,REPAIR	ﾘﾍﾟｱｷｯﾄ	1	INC.2-4,13,14,17-20,22
1	22N54-30122		AXLE,STEERING	ｱｸｽﾙ	1	
-	52N53-70122		AXLE,STEERING	ｱｸｽﾙ	1	[FC][FC/RINFC]
2	23654-32161	*	O-RING	Oﾘﾝｸﾞ	2	
3	214A4-32161	*	SEAL,DUST	ｼｰﾙ	3	
4	03146-13201	*	BRG,NEEDLE	ﾍﾞｱﾘﾝｸﾞ	4	
5	514A3-72052		PLATE,CAP	ﾌﾟﾚｰﾄ	1	[FC][FC/RINFC]
6	514A3-72062		PACKING	ﾊﾟｯｷﾝｸﾞ	1	[FC][FC/RINFC]
7	01141-06012		BOLT	ﾎﾞﾙﾄ	3	[FC][FC/RINFC]
8	02010-10006		WASHER	ﾜｯｼｬ	3	[FC][FC/RINFC]
9	22N54-32501		KNUCKLE,RH	ﾅｯｸﾙ	1	
-	52N53-72201		KNUCKLE,RH	ﾅｯｸﾙ	1	[FC/RINFC]
10	22N54-32511		KNUCKLE,LH	ﾅｯｸﾙ	1	
-	52N53-72211		KNUCKLE,LH	ﾅｯｸﾙ	1	[FC/RINFC]
11	514A3-72211		SEAT,OIL-SEAL	ｼｰﾄ	2	[FC/RINFC]
12	22N54-32481		BUSHING	ﾌﾞｯｼﾝｸﾞ	2	
13	22214-30321	*	SHIM,T-0.2	ｼﾑ	6	
14	03126-83201	*	BRG,THRUST	ﾍﾞｱﾘﾝｸﾞ	2	
15	24454-32232		KINGPIN	ｷﾝｸﾞﾋﾟﾝ	1	
-	514A3-72201		KINGPIN	ｷﾝｸﾞﾋﾟﾝ	1	[FC][FC/RINFC]
16	22N54-32201		KINGPIN	ｷﾝｸﾞﾋﾟﾝ	1	1-115
-	22N54-32261		KINGPIN	ｷﾝｸﾞﾋﾟﾝ	1	116-
17	215E4-32341	*	PIN,LOCK	ﾋﾟﾝ	2	
18	02000-00010	*	WASHER	ﾜｯｼｬ	2	
19	02010-00010	*	WASHER	ﾜｯｼｬ	2	
20	01400-00010	*	NUT	ﾅｯﾄ	2	
21	04901-00100		FITTING	ﾌｨｯﾃｨﾝｸﾞ	1	
22	04901-00190	*	FITTING	ﾌｨｯﾃｨﾝｸﾞ	1	
23	04901-00191		FITTING	ﾌｨｯﾃｨﾝｸﾞ	2	
24	22199-12401		CAP,NIPPLE	ｷｬｯﾌﾟ	4	
25	214A4-32041		HUB,REAR	ﾊﾌﾞ	2	
26	23654-32041		BOLT,HUB	ﾎﾞﾙﾄ	16	
27	03071-30211		BRG,TAPER-ROLLER	ﾍﾞｱﾘﾝｸﾞ	2	
28	03071-30207		BRG,TAPER-ROLLER	ﾍﾞｱﾘﾝｸﾞ	2	
29	03217-08501		SEAL,OIL	ｼｰﾙ	2	
30	01412-00030		NUT,CASTLE	ﾅｯﾄ	2	
31	02000-00030		WASHER	ﾜｯｼｬ	2	
32	02200-06055		PIN,COTTER	ﾋﾟﾝ	2	

FIG.74 STEERING AXLE

(F7Z24310) ステアリング゛アクスル

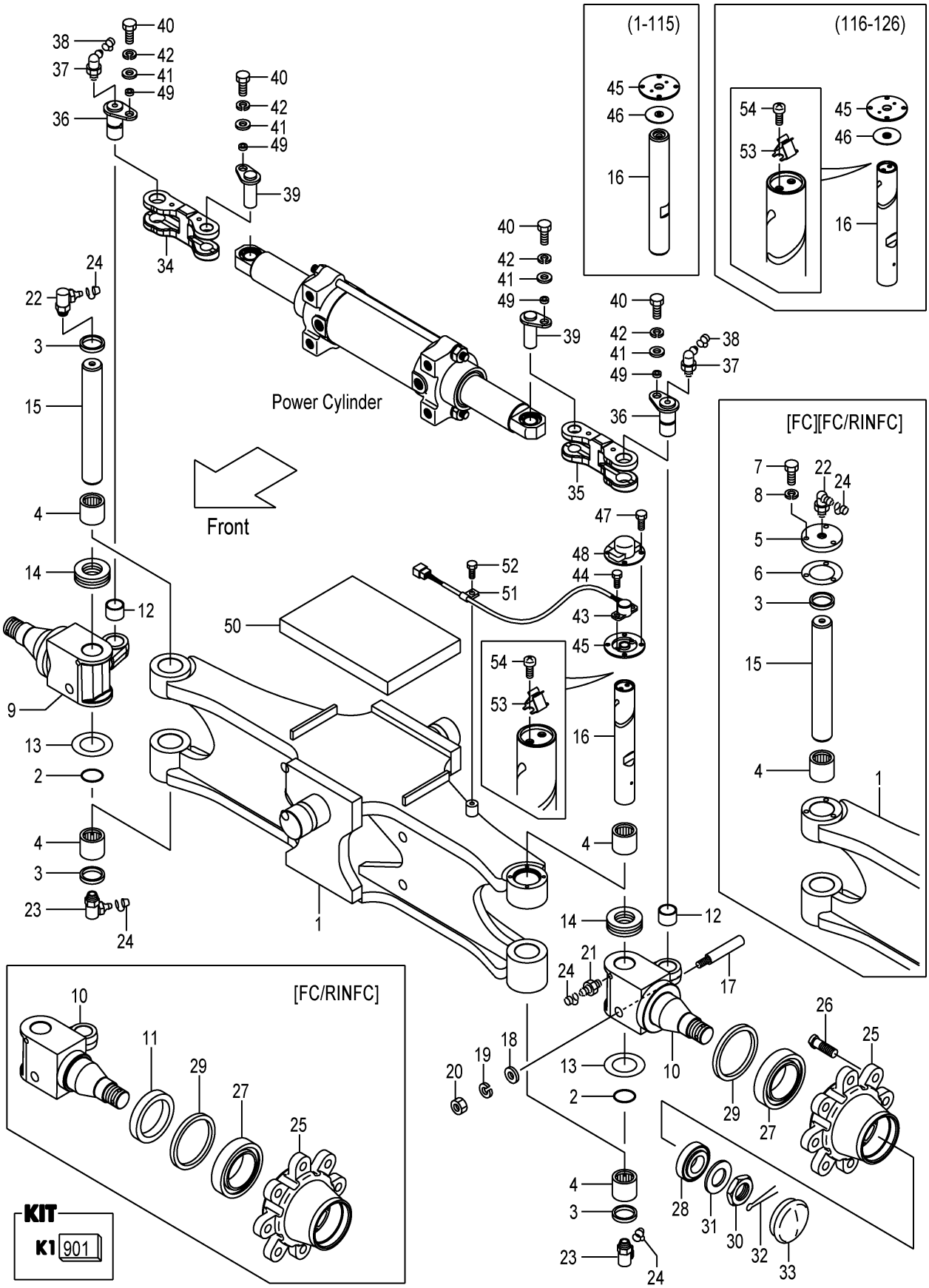

A:FD20C3Z FD20T3Z FD25C3Z FD25T3Z:1-275

Item No	Part No.	Mark	Description		Req'd	Remarks : Serial No.
33	214A4-32051		CAP	ｷｬｯﾌﾟ	2	
34	22N54-32941		YOKE,RH	ﾖｰｸ	1	1-112
-	22N54-32351		YOKE,RH	ﾖｰｸ	1	113-
35	22N54-32971		YOKE,LH	ﾖｰｸ	1	1-112
-	22N54-32361		YOKE,LH	ﾖｰｸ	1	113-
36	22N54-32131		PIN	ﾋﾟﾝ	2	
37	04901-00190		FITTING	ﾌｨｯﾃｨﾝｸﾞ	2	
38	22199-12401		CAP,NIPPLE	ｷｬｯﾌﾟ	2	
39	22N54-32151		PIN	ﾋﾟﾝ	2	
40	01103-08016		BOLT	ﾎﾞﾙﾄ	4	
41	02000-00008		WASHER	ﾜｯｼｬ	4	
42	02011-00008		WASHER	ﾜｯｼｬ	4	
43	22N54-32211		POTENTIOMETER	ﾎﾟﾃﾝｼｵﾒｰﾀ	1	
44	01185-04010		BOLT	ﾎﾞﾙﾄ	2	
45	22N54-32221		ADAPTER	ｱﾀﾞﾌﾟﾀ	1	1-126
-	22N54-32222		ADAPTER	ｱﾀﾞﾌﾟﾀ	1	127-
46	22N54-32231		PACKING	ﾊﾟｯｷﾝｸﾞ	1	1-115
-	22N54-32232		PACKING	ﾊﾟｯｷﾝｸﾞ	1	116-126
47	01030-06010		BOLT	ﾎﾞﾙﾄ	4	
48	22N54-32241		COVER,POTENTIOMETER	ｶﾊﾞｰ	1	
49	22N54-32181		COLLAR	ｶﾗｰ	4	
50	22N54-32402		RUBBER	ﾗﾊﾞｰ	1	
51	26602-42041		CLIP	ｸﾘｯﾌﾟ	1	
52	01185-08016		BOLT	ﾎﾞﾙﾄ	1	
53	22N54-33051		SPRING	ｽﾌﾟﾘﾝｸﾞ	1	116-
54	01030-05008		SCREW	ｽｸﾘｭ	2	116-

FIG.74A STEERING AXLE

(F7Z24311) ステアリング゛アクスル

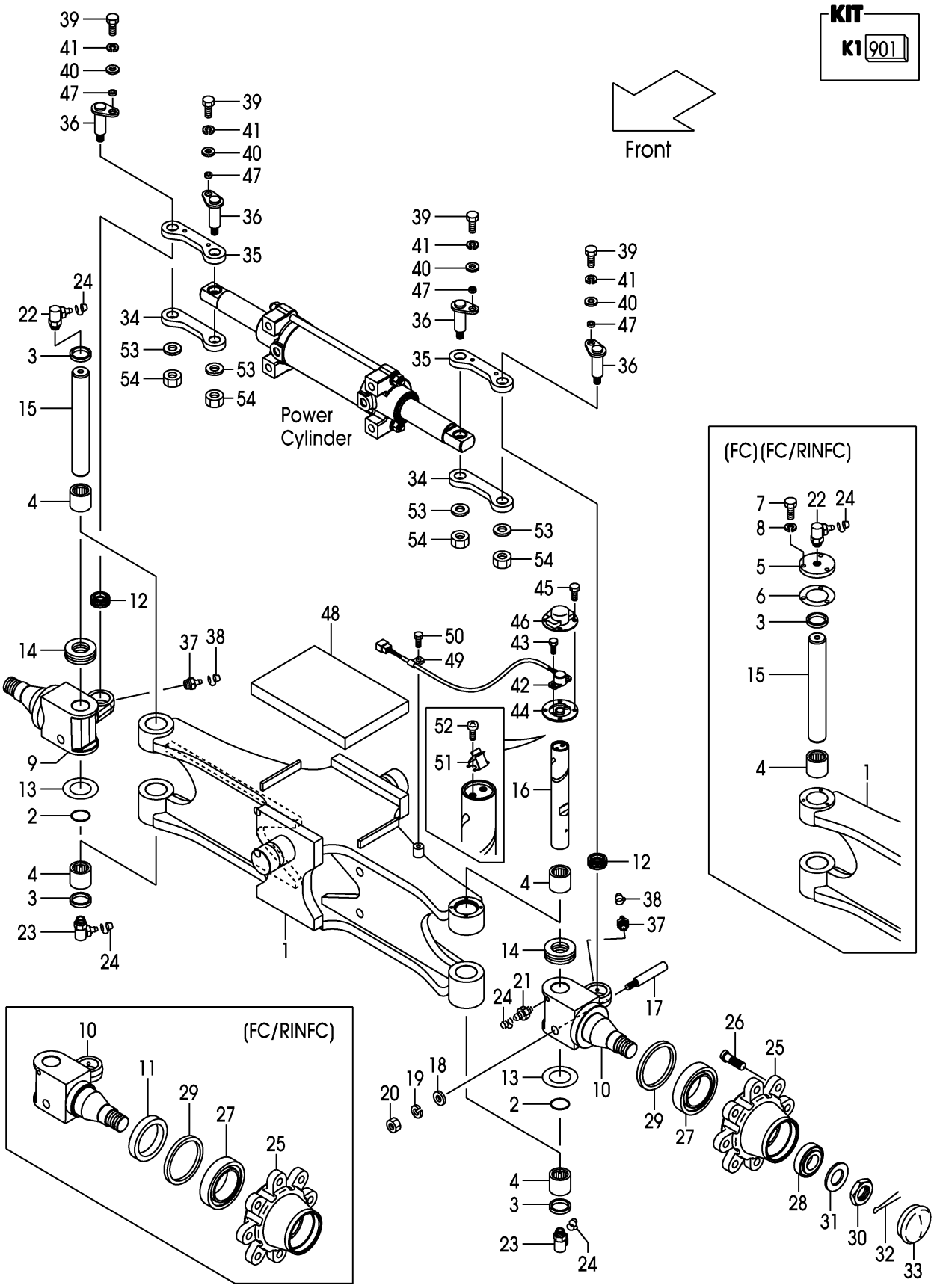

A:FD20C3Z FD20T3Z FD25C3Z FD25T3Z:276-

Item No	Part No.	Mark	Description		Req'd	Remarks : Serial No.
A1	22B54-30101		AXLE-ASSY,STEERING	ｽﾃｱﾘﾝｸﾞｱｸｽﾙｱｯｾﾝ	1	INC.1-4,9,10,12-33
-	52B53-70101		AXLE-ASSY,STEERING	ｽﾃｱﾘﾝｸﾞｱｸｽﾙｱｯｾﾝ	1	[FC] INC.1-10,12-33
-	52B53-70201		AXLE-ASSY,STEERING	ｽﾃｱﾘﾝｸﾞｱｸｽﾙｱｯｾﾝ	1	[FC/RINFC] INC.1-33
901	215E4-39801	K1	KIT,REPAIR	ﾘﾍﾟｱｷｯﾄ	1	INC.2-4,13,14,17-20,22
1	22B54-30121		AXLE,STEERING	ｱｸｽﾙ	1	
-	52B53-70121		AXLE,STEERING	ｱｸｽﾙ	1	[FC][FC/RINFC]
2	23654-32161	*	O-RING	Oﾘﾝｸﾞ	2	
3	214A4-32161	*	SEAL,DUST	ｼｰﾙ	3	
4	03146-13201	*	BRG,NEEDLE	ﾍﾞｱﾘﾝｸﾞ	4	
5	514A3-72052		PLATE,CAP	ﾌﾟﾚｰﾄ	1	[FC][FC/RINFC]
6	514A3-72062		PACKING	ﾊﾟｯｷﾝｸﾞ	1	[FC][FC/RINFC]
7	01141-06012		BOLT	ﾎﾞﾙﾄ	3	[FC][FC/RINFC]
8	02010-10006		WASHER	ﾜｯｼｬ	3	[FC][FC/RINFC]
9	22B54-32501		KNUCKLE,RH	ﾅｯｸﾙ	1	
-	52B53-72201		KNUCKLE,RH	ﾅｯｸﾙ	1	[FC/RINFC]
10	22B54-32511		KNUCKLE,LH	ﾅｯｸﾙ	1	
-	52B53-72211		KNUCKLE,LH	ﾅｯｸﾙ	1	[FC/RINFC]
11	514A3-72211		SEAT,OIL-SEAL	ｼｰﾄ	2	[FC/RINFC]
12	215E4-52231		JOINT,SPHERE-FACE	ｼﾞｮｲﾝﾄ	2	
13	22214-30321	*	SHIM,T-0.2	ｼﾑ	6	
14	03126-83201	*	BRG,THRUST	ﾍﾞｱﾘﾝｸﾞ	2	
15	24454-32232		KINGPIN	ｷﾝｸﾞﾋﾟﾝ	1	
-	514A3-72201		KINGPIN	ｷﾝｸﾞﾋﾟﾝ	1	[FC][FC/RINFC]
16	22N54-32261		KINGPIN	ｷﾝｸﾞﾋﾟﾝ	1	
17	215E4-32341	*	PIN,LOCK	ﾋﾟﾝ	2	
18	02000-00010	*	WASHER	ﾜｯｼｬ	2	
19	02010-00010	*	WASHER	ﾜｯｼｬ	2	
20	01400-00010	*	NUT	ﾅｯﾄ	2	
21	04901-00100		FITTING	ﾌｨｯﾃｨﾝｸﾞ	1	
22	04901-00190	*	FITTING	ﾌｨｯﾃｨﾝｸﾞ	1	
23	04901-00191		FITTING	ﾌｨｯﾃｨﾝｸﾞ	2	
24	22199-12401		CAP,NIPPLE	ｷｬｯﾌﾟ	4	
25	214A4-32041		HUB,REAR	ﾊﾌﾞ	2	
26	23654-32041		BOLT,HUB	ﾎﾞﾙﾄ	16	
27	03071-30211		BRG,TAPER-ROLLER	ﾍﾞｱﾘﾝｸﾞ	2	
28	03071-30207		BRG,TAPER-ROLLER	ﾍﾞｱﾘﾝｸﾞ	2	
29	03217-08501		SEAL,OIL	ｼｰﾙ	2	
30	01412-00030		NUT,CASTLE	ﾅｯﾄ	2	
31	02000-00030		WASHER	ﾜｯｼｬ	2	
32	02200-06055		PIN,COTTER	ﾋﾟﾝ	2	
33	214A4-32051		CAP	ｷｬｯﾌﾟ	2	
34	22B54-32961		PLATE,LOWER	ﾌﾟﾚｰﾄ	2	
35	22B54-32951		PLATE,UPPER	ﾌﾟﾚｰﾄ	2	
36	22B54-32171		PIN	ﾋﾟﾝ	4	
37	214A8-52051		FITTING	ﾌｨｯﾃｨﾝｸﾞ	2	
38	22199-12401		CAP,NIPPLE	ｷｬｯﾌﾟ	2	
39	01103-08016		BOLT	ﾎﾞﾙﾄ	4	
40	02000-00008		WASHER	ﾜｯｼｬ	4	
41	02011-00008		WASHER	ﾜｯｼｬ	4	
42	22N54-32211		POTENTIOMETER	ﾎﾟﾃﾝｼｵﾒｰﾀ	1	

FIG.74A STEERING AXLE

(F7Z24311) ステアリング゛アクスル

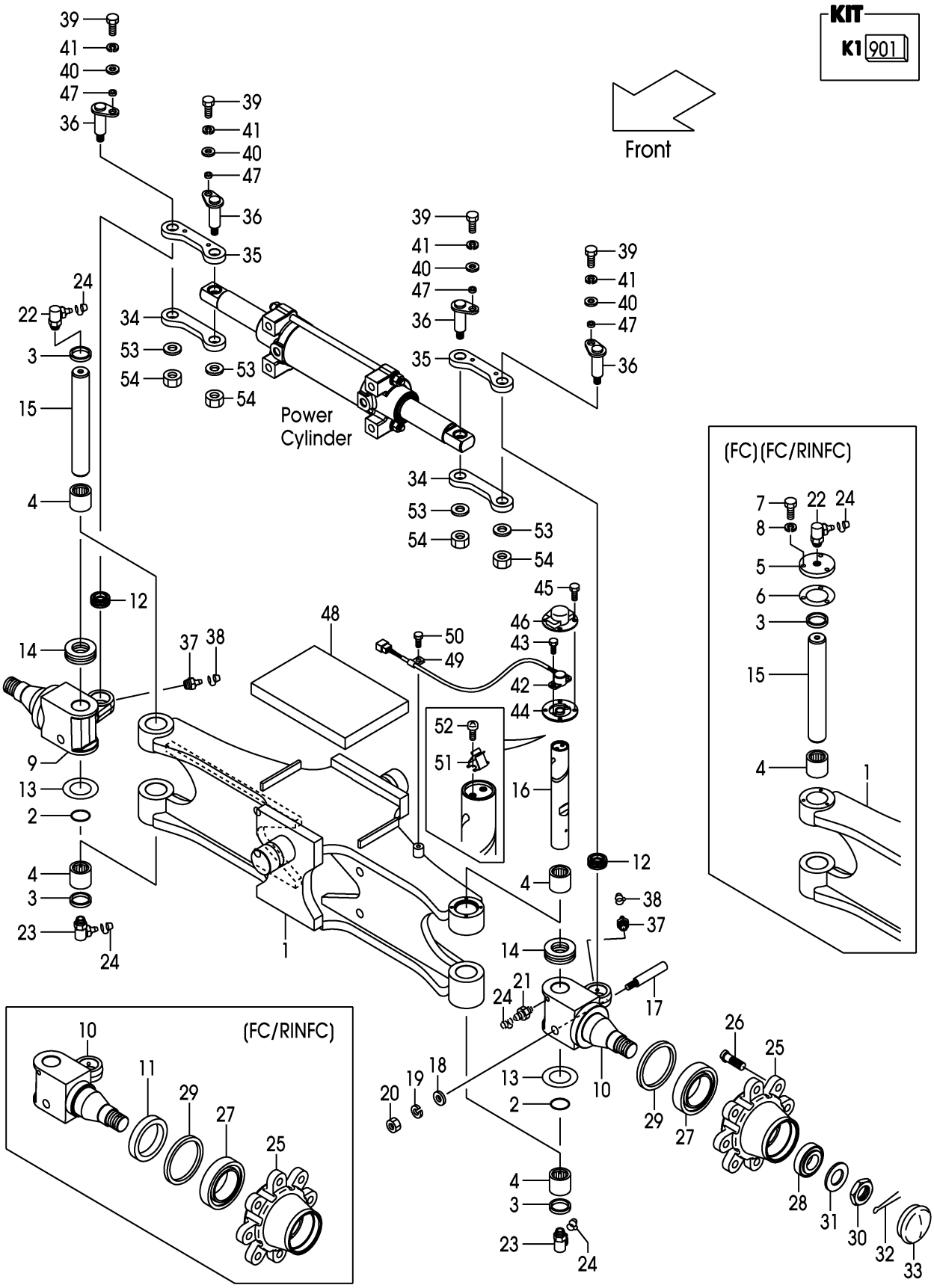

A:FD20C3Z FD20T3Z FD25C3Z FD25T3Z:276-

Item No	Part No.	Mark	Description		Req'd	Remarks : Serial No.
43	01185-04010		BOLT	ﾎﾞﾙﾄ	2	
44	22N54-32222		ADAPTER	ｱﾀﾞﾌﾟﾀ	1	
45	01030-06010		BOLT	ﾎﾞﾙﾄ	4	
46	22N54-32241		COVER,POTENTIOMETER	ｶﾊﾞｰ	1	
47	22N54-32181		COLLAR	ｶﾗｰ	4	
48	22N54-32402		RUBBER	ﾗﾊﾞｰ	1	
49	26602-42041		CLIP	ｸﾘｯﾌﾟ	1	
50	01185-08016		BOLT	ﾎﾞﾙﾄ	1	
51	22N54-33051		SPRING	ｽﾌﾟﾘﾝｸﾞ	1	
52	01030-05008		SCREW	ｽｸﾘｭ	2	
53	256C9-52372		WASHER	ﾜｯｼｬ	4	
54	271F6-42531		NUT	ﾅｯﾄ	4	

FIG.75 AXLE SUPPORT

(F7Z24330) アクスルサポート

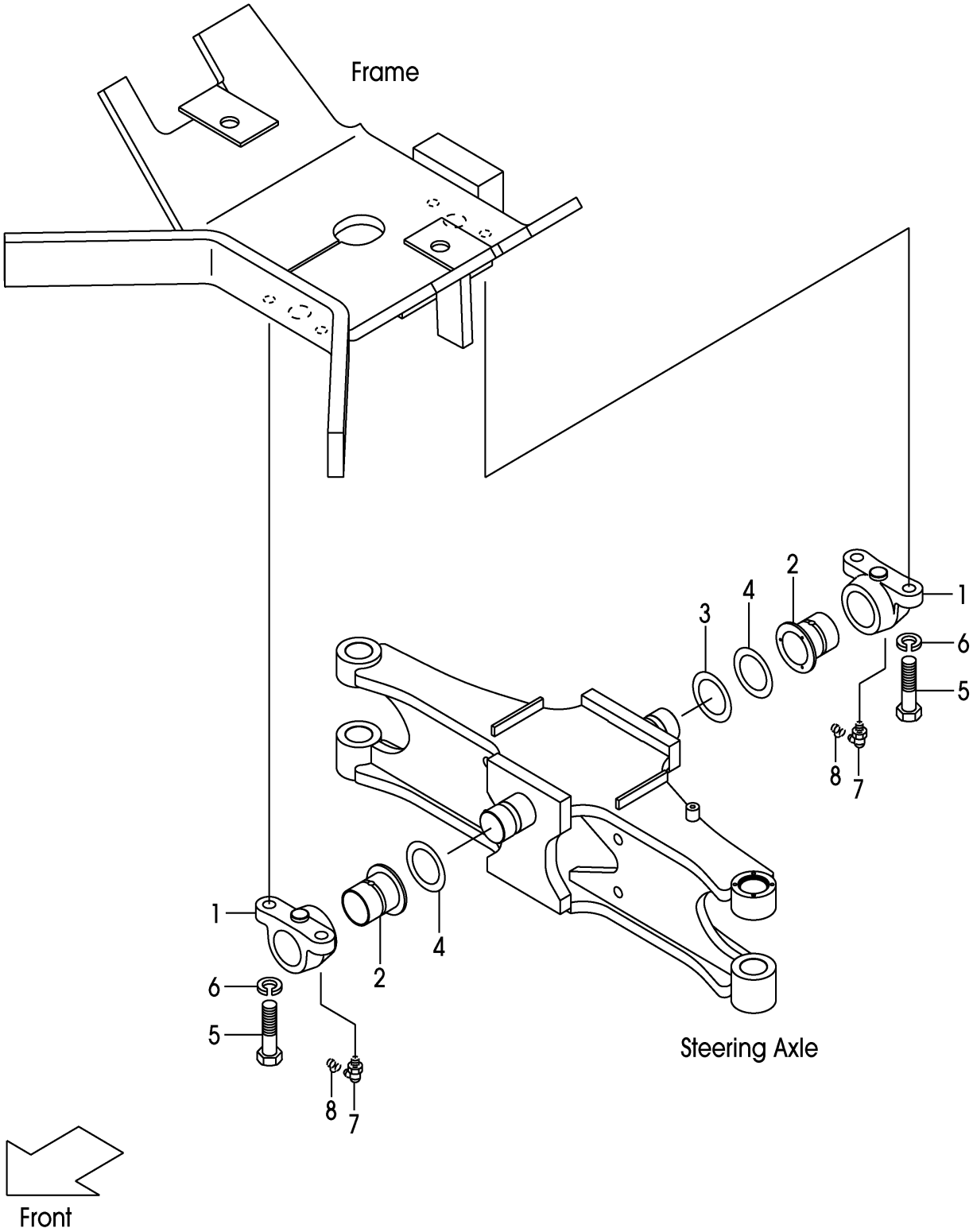

FIG.75

(F7Z24330)

A:FD20C3Z FD20T3Z FD25C3Z FD25T3Z

Item No	Part No.	Mark	Description		Req'd	Remarks : Serial No.
1	22N54-32311		SUPPORT,REAR-AXLE	ｻﾎﾟｰﾄ	2	
2	22N54-32321		BUSHING,AXLE-SUPPORT	ﾌﾞｯｼﾝｸﾞ	2	
3	214A4-32201		SHIM,T-0.5	ｼﾑ	1	
4	214A4-32211		SHIM,T-1.0	ｼﾑ	2	
5	01100-16045		BOLT	ﾎﾞﾙﾄ	4	
6	02010-00016		WASHER	ﾜｯｼｬ	4	
7	04901-00190		FITTING	ﾌｨｯﾃｨﾝｸﾞ	2	
8	22199-12401		CAP,NIPPLE	ｷｬｯﾌﾟ	2	

FIG.76 HUB NUT

(F7Z24410) ﾊﾌﾞﾅｯﾄ

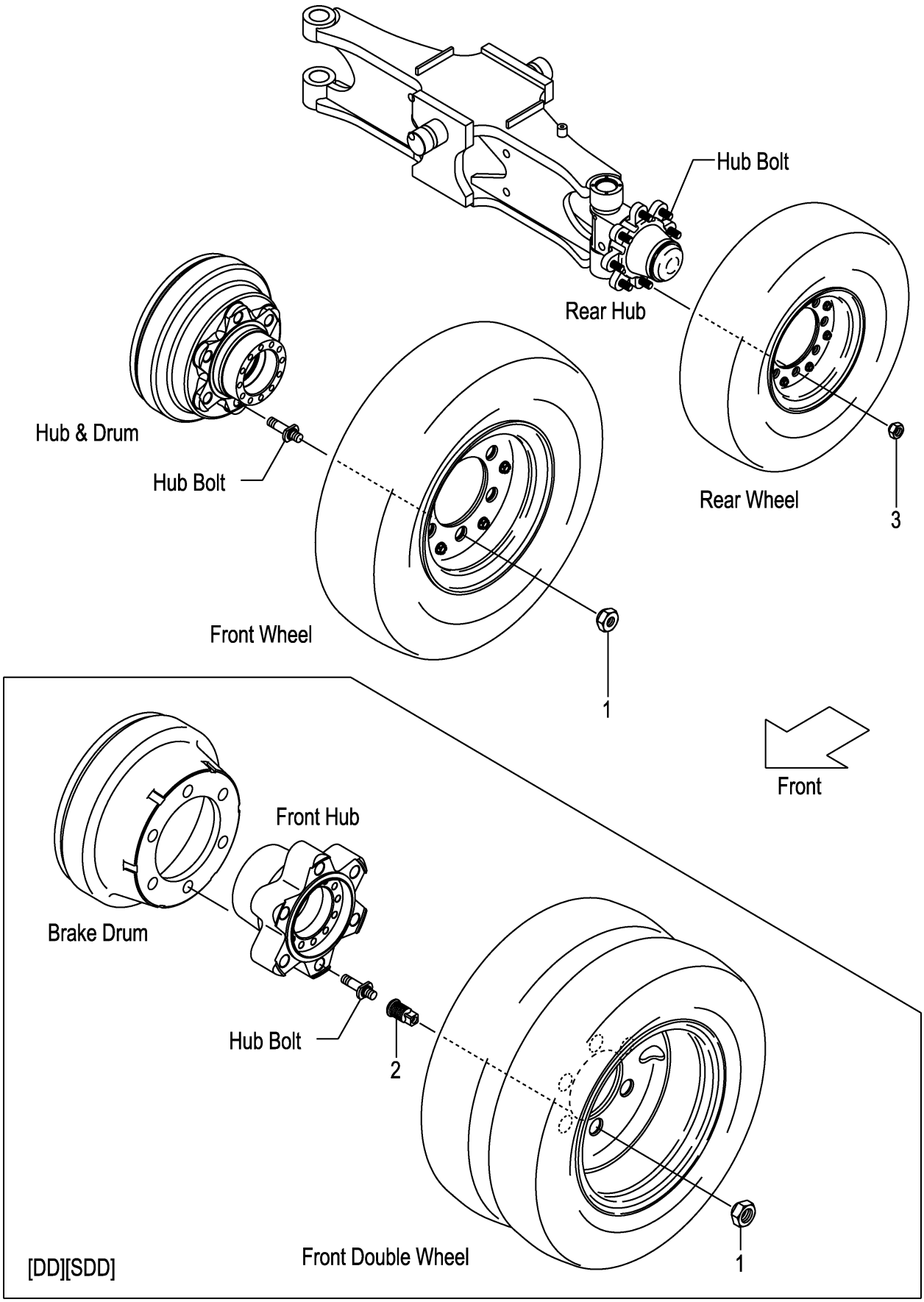

FIG.76

(F7Z24410)

A:FD20C3Z FD20T3Z FD25C3Z FD25T3Z

Item No	Part No.	Mark	Description	Req'd	Remarks : Serial No.
1	24354-32311		NUT,HUB ﾅｯﾄ	12	(FRONT)
-	57045-52141		NUT,HUB ﾅｯﾄ	12	[FC](FRONT)
-	23813-00081		NUT,HUB ﾅｯﾄ	12	[DD][SDD](FRONT)
-	514A3-72101		NUT,HUB ﾅｯﾄ	12	[FC/DD][FC/SDD](FRONT)
2	23813-00071		NUT,INNER ﾅｯﾄ	12	[DD][SDD][FC/DD][FC/SDD] (FRONT)
3	23654-34051		NUT,HUB ﾅｯﾄ	16	(REAR)
-	57045-52151		NUT,HUB ﾅｯﾄ	16	[FC](REAR)

FIG.77 FENDER [DD][SDD][TUJSF]

(F7Z24420) ﾌｪﾝﾀﾞ

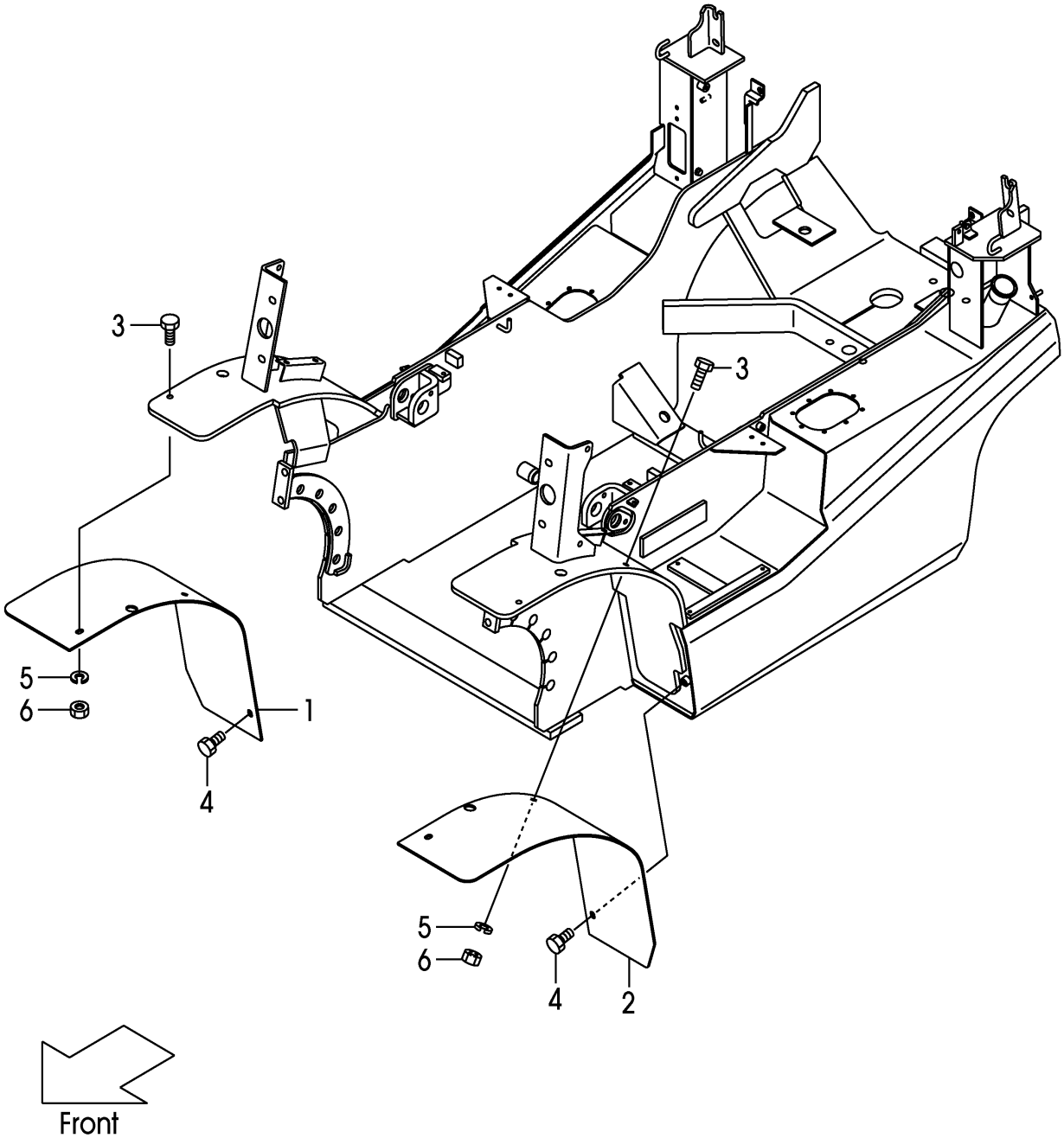

FIG.77
(F7Z24420)

A:FD20C3Z FD20T3Z FD25C3Z FD25T3Z

Item No	Part No.	Mark	Description		Req'd	Remarks : Serial No.
1	52N57-42001		FENDER,FRONT,RH	ﾌｪﾝﾀﾞ	1	[DD]
-	52N57-42021		FENDER,FRONT,RH	ﾌｪﾝﾀﾞ	1	[SDD]
-	52N57-42041		FENDER,FRONT,RH	ﾌｪﾝﾀﾞ	1	[TUJSF]
2	52N57-42011		FENDER,FRONT,LH	ﾌｪﾝﾀﾞ	1	[DD]
-	52N57-42031		FENDER,FRONT,LH	ﾌｪﾝﾀﾞ	1	[SDD]
-	52N57-42051		FENDER,FRONT,LH	ﾌｪﾝﾀﾞ	1	[TUJSF]
3	534A7-42231		BOLT	ﾎﾞﾙﾄ	4	[DD][SDD][TUJSF]
4	216G6-43231		BOLT	ﾎﾞﾙﾄ	2	[DD][SDD][TUJSF]
5	02010-20010		WASHER	ﾜｯｼｬ	4	[DD][SDD][TUJSF]
6	234A8-42561		NUT	ﾅｯﾄ	4	[DD][SDD][TUJSF]

FIG.78 FRONT WHEEL

(F7Z24430) フロントホイール

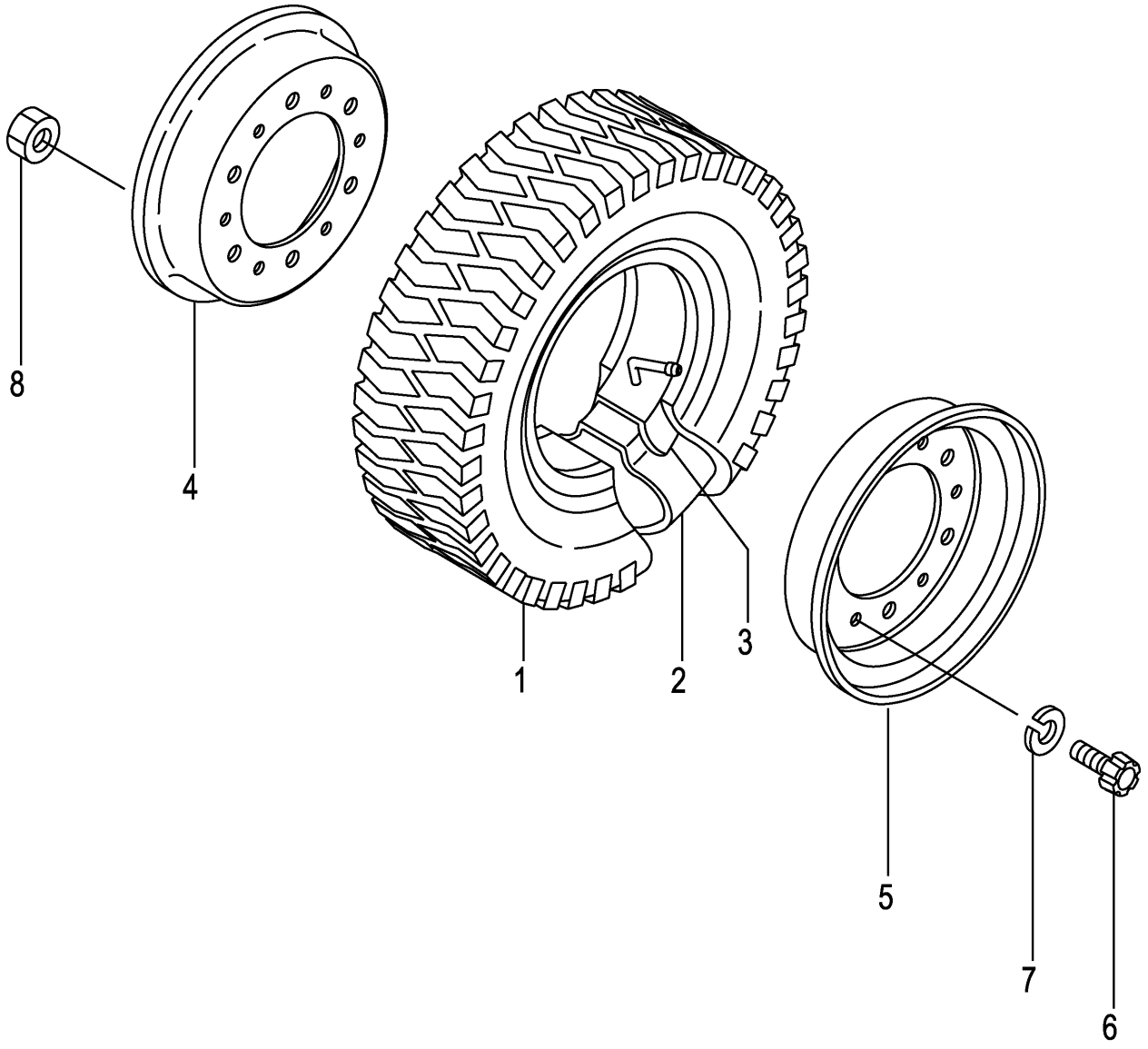

A:FD20C3Z FD20T3Z FD25C3Z FD25T3Z

Item No	Part No.	Mark	Description		Req'd	Remarks : Serial No.
A1	53456-80902		WHEEL-ASSY,FRONT	ﾌﾛﾝﾄﾎｲｰﾙｱｯｾﾝ	2	INC.1-8
1	06006-70012		TIRE,700-12-12	ﾀｲﾔ	2	
2	06711-70012		TUBE,700-12-12T	ﾁｭｰﾌﾞ	2	
3	06701-70012		FLAP,700-12-12F	ﾌﾗｯﾌﾟ	2	
A2	23454-40501		RIM-ASSY,500S-12	ﾘﾑｱｯｾﾝ	2	INC.4-8
4	NO PART NO.	#	RIM,INSIDE	ﾘﾑ	2	
5	NO PART NO.	#	RIM,OUTSIDE	ﾘﾑ	2	
6	514A3-82601		BOLT	ﾎﾞﾙﾄ	12	
7	02011-00016		WASHER	ﾜｯｼｬ	12	
8	01400-10016		NUT	ﾅｯﾄ	12	

FIG.79 FRONT WHEEL [DR F]

(F7Z24440) フロントホイール

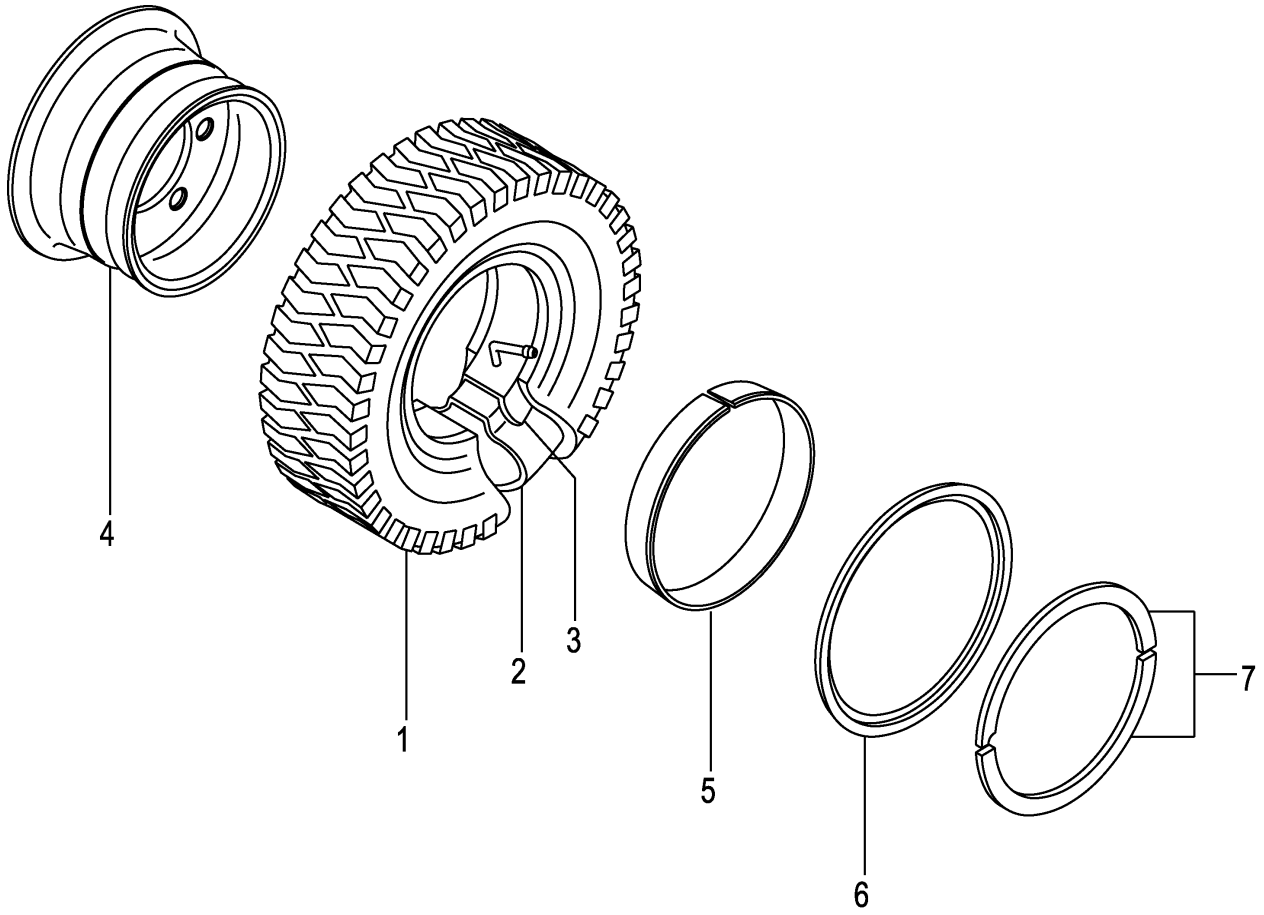

A:FD20C3Z FD20T3Z FD25C3Z FD25T3Z

Item No	Part No.	Mark	Description		Req'd	Remarks : Serial No.
A1	53666-80601		WHEEL-ASSY,FRONT	ﾌﾛﾝﾄﾎｲｰﾙｱｯｾﾝ	2	[DR F] INC.1-7
1	06006-70012		TIRE,700-12-12	ﾀｲﾔ	2	[DR F]
2	06711-70012		TUBE,700-12-12T	ﾁｭｰﾌﾞ	2	[DR F]
3	06701-70012		FLAP,700-12-12F	ﾌﾗｯﾌﾟ	2	[DR F]
A2	53666-81801		RIM-ASSY,500S-12	ﾘﾑｱｯｾﾝ	2	[DR F] INC.4-7
4	NO PART NO.	#	RIM	ﾘﾑ	2	[DR F]
5	53656-82041		BAND	ﾊﾞﾝﾄﾞ	2	[DR F]
6	53656-82051		FLANGE,SIDE	ﾌﾗﾝｼﾞ	2	[DR F]
7	53656-82061		RING,LOCK	ﾘﾝｸﾞ	2	[DR F]

FIG.80 FRONT WHEEL [TJ F][TJSF][TF][TS F]

(F7Z24450) フロントホイール

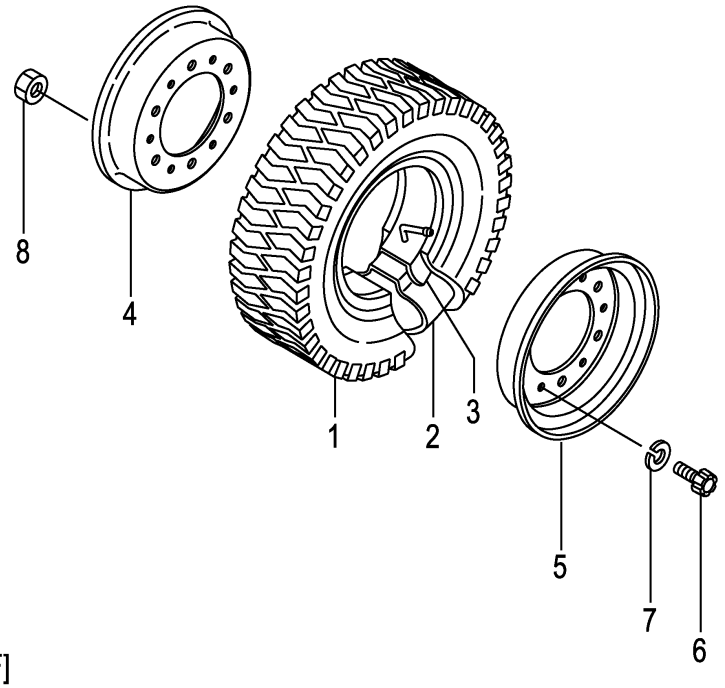

[TJ F][TJSF][TS F]

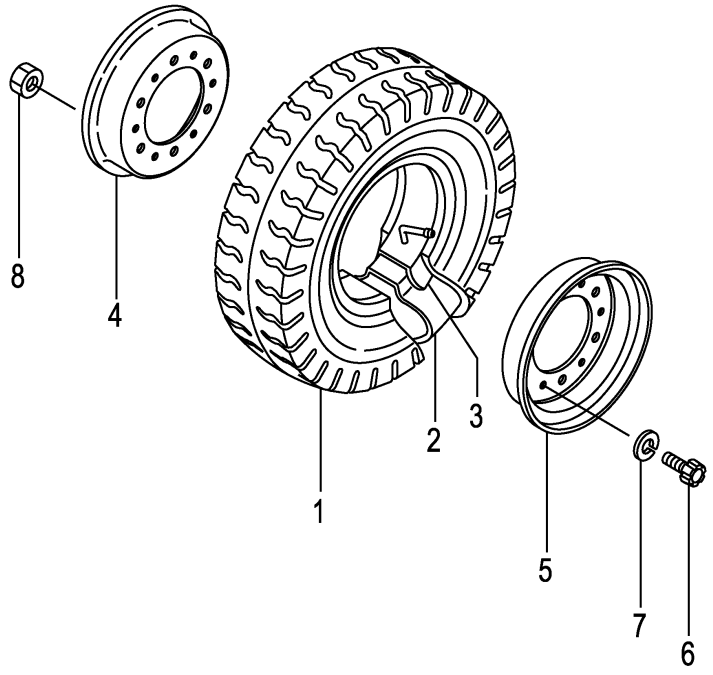

[T F]

A:FD20C3Z FD20T3Z FD25C3Z FD25T3Z

Item No	Part No.	Mark	Description		Req'd	Remarks : Serial No.
A1	53456-80902		WHEEL-ASSY,FRONT	ﾌﾛﾝﾄﾎｲｰﾙｱｯｾﾝ	2	[TJ F] INC.1-8
-	53456-80702		WHEEL-ASSY,FRONT	ﾌﾛﾝﾄﾎｲｰﾙｱｯｾﾝ	2	[TJSF] INC.1-8
-	23454-40601		WHEEL-ASSY,FRONT	ﾌﾛﾝﾄﾎｲｰﾙｱｯｾﾝ	2	[T F] INC.1-8
-	53456-80502		WHEEL-ASSY,FRONT	ﾌﾛﾝﾄﾎｲｰﾙｱｯｾﾝ	2	[TS F] INC.1-8
1	06006-70012		TIRE,700-12-12	ﾀｲﾔ	2	[TJ F]
-	06005-70012		TIRE,700-12-12	ﾀｲﾔ	2	[TJSF]
-	06001-70012		TIRE,700-12-12	ﾀｲﾔ	2	[T F]
-	06007-70012		TIRE,700-12-12	ﾀｲﾔ	2	[TS F]
2	06711-70012		TUBE,700-12-12T	ﾁｭｰﾌﾞ	2	[TJ F][TJSF][T F][TS F]
3	06701-70012		FLAP,700-12-12F	ﾌﾗｯﾌﾟ	2	[TJ F][TJSF][T F][TS F]
A2	23454-40501		RIM-ASSY,500S-12	ﾘﾑｱｯｾﾝ	2	[TJ F][TJSF][T F][TS F] INC.4-8
4	NO PART NO.	#	RIM,INSIDE	ﾘﾑ	2	[TJ F][TJSF][T F][TS F]
5	NO PART NO.	#	RIM,OUTSIDE	ﾘﾑ	2	[TJ F][TJSF][T F][TS F]
6	514A3-82601		BOLT	ﾎﾞﾙﾄ	12	[TJ F][TJSF][T F][TS F]
7	02011-00016		WASHER	ﾜｯｼｬ	12	[TJ F][TJSF][T F][TS F]
8	01400-10016		NUT	ﾅｯﾄ	12	[TJ F][TJSF][T F][TS F]

FIG.81 FRONT WHEEL [(TJ F,TJSF,TF,TS F)/DR F]

(F7Z24460) フロントホイール

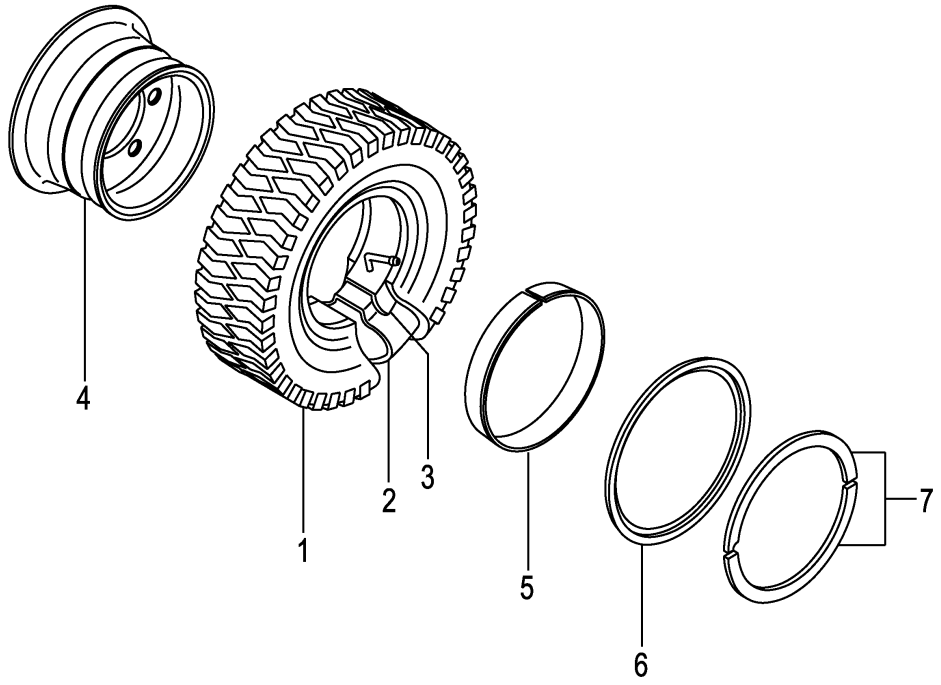

[TJ F/DR F][TJSF/DR F][TS F/DR F]

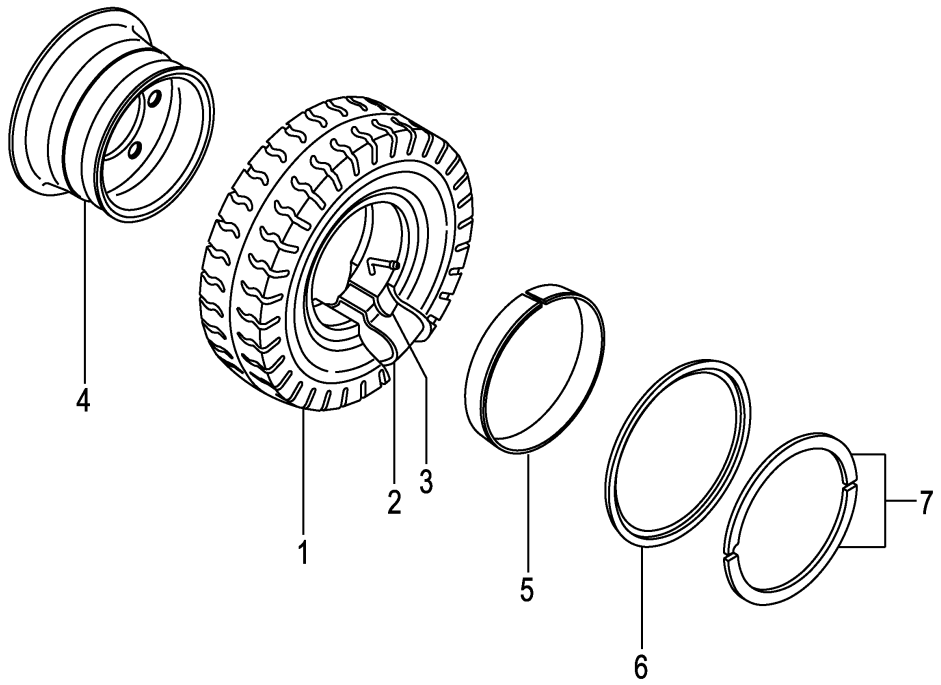

[T F/DR F]

A:FD20C3Z FD20T3Z FD25C3Z FD25T3Z

Item No	Part No.	Mark	Description		Req'd	Remarks : Serial No.
A1	53666-80601		WHEEL-ASSY,FRONT	ﾌﾛﾝﾄﾎｲｰﾙｱｯｾﾝ	2	[TJ F/DR F] INC.1-7
-	53666-80501		WHEEL-ASSY,FRONT	ﾌﾛﾝﾄﾎｲｰﾙｱｯｾﾝ	2	[TJSF/DR F] INC.1-7
-	53666-80201		WHEEL-ASSY,FRONT	ﾌﾛﾝﾄﾎｲｰﾙｱｯｾﾝ	2	[T F/DR F] INC.1-7
-	53666-80701		WHEEL-ASSY,FRONT	ﾌﾛﾝﾄﾎｲｰﾙｱｯｾﾝ	2	[TS F/DR F] INC.1-7
1	06006-70012		TIRE,700-12-12	ﾀｲﾔ	2	[TJ F/DR F]
-	06005-70012		TIRE,700-12-12	ﾀｲﾔ	2	[TJSF/DR F]
-	06001-70012		TIRE,700-12-12	ﾀｲﾔ	2	[T F/DR F]
-	06007-70012		TIRE,700-12-12	ﾀｲﾔ	2	[TS F/DR F]
2	06711-70012		TUBE,700-12-12T	ﾁｭｰﾌﾞ	2	[TJ F/DR F][TJSF/DR F]
						[T F/DR F][TS F/DR F]
3	06701-70012		FLAP,700-12-12F	ﾌﾗｯﾌﾟ	2	[TJ F/DR F][TJSF/DR F]
						[T F/DR F][TS F/DR F]
A2	53666-81801		RIM-ASSY,500S-12	ﾘﾑｱｯｾﾝ	2	[TJ F/DR F][T F/DR F] INC.4-7
-	53666-81801		RIM-ASSY,500S-12	ﾘﾑｱｯｾﾝ	2	[TJSF/DR F][TS F/DR F] INC.4-7
4	NO PART NO.	#	RIM	ﾘﾑ	2	[TJ F/DR F][TJSF/DR F]
						[T F/DR F][TS F/DR F]
5	53656-82041		BAND	ﾊﾞﾝﾄﾞ	2	[TJ F/DR F][TJSF/DR F]
						[T F/DR F][TS F/DR F]
6	53656-82051		FLANGE,SIDE	ﾌﾗﾝｼﾞ	2	[TJ F/DR F][TJSF/DR F]
						[T F/DR F][TS F/DR F]
7	53656-82061		RING,LOCK	ﾘﾝｸﾞ	2	[TJ F/DR F][TJSF/DR F]
						[T F/DR F][TS F/DR F]

FIG.82 FRONT WHEEL [TSUF][TUJF][TUSF][TUWF][TUGF]

(F7Z24470) フロントホイール

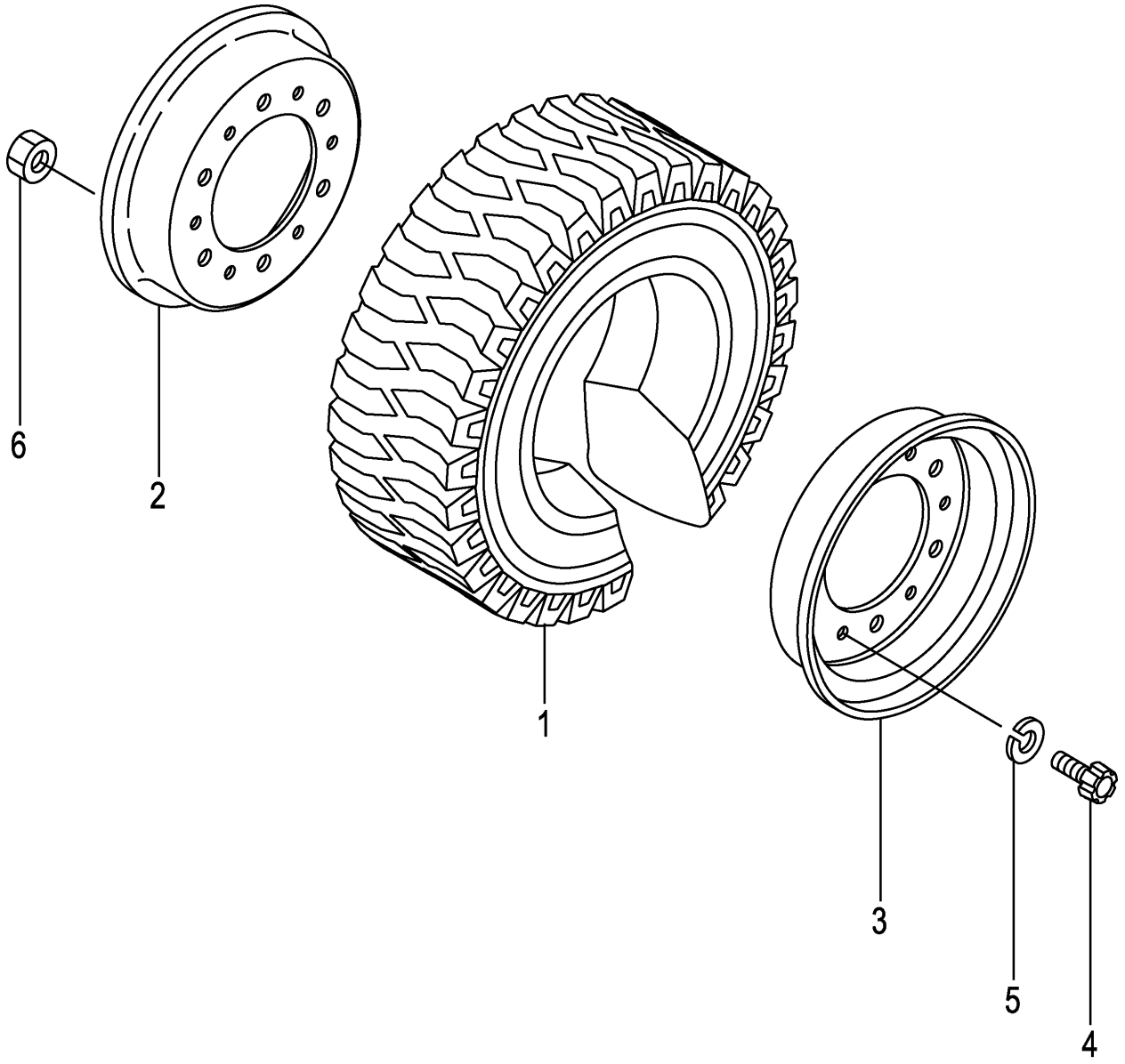

A:FD20C3Z FD20T3Z FD25C3Z FD25T3Z

Item No	Part No.	Mark	Description		Req'd	Remarks : Serial No.
A1	539A6-80201		WHEEL-ASSY,FRONT	ﾌﾛﾝﾄﾎｲｰﾙｱｯｾﾝ	2	[TSUF] INC.1-6
-	52676-80601		WHEEL-ASSY,FRONT	ﾌﾛﾝﾄﾎｲｰﾙｱｯｾﾝ	2	[TUJF] INC.1-6
-	52676-80601		WHEEL-ASSY,FRONT	ﾌﾛﾝﾄﾎｲｰﾙｱｯｾﾝ	2	[TUJF] INC.1-6
-	52676-80601		WHEEL-ASSY,FRONT	ﾌﾛﾝﾄﾎｲｰﾙｱｯｾﾝ	2	[TUJF/EX] INC.1-6
-	522A6-80221		WHEEL-ASSY,FRONT	ﾌﾛﾝﾄﾎｲｰﾙｱｯｾﾝ	2	[TUSF] INC.1-6
-	522A6-80201		WHEEL-ASSY,FRONT	ﾌﾛﾝﾄﾎｲｰﾙｱｯｾﾝ	2	[TUWF] INC.1-6
-	522A6-80211		WHEEL-ASSY,FRONT	ﾌﾛﾝﾄﾎｲｰﾙｱｯｾﾝ	2	[TUGF] INC.1-6
1	06807-70012		TIRE,UNIQUE,700-12	ﾀｲﾔ	2	[TSUF]
-	06806-70012		TIRE,UNIQUE,700-12	ﾀｲﾔ	2	[TUJF]
-	06806-70012		TIRE,UNIQUE,700-12	ﾀｲﾔ	2	[TUJF]
-	06806-70012		TIRE,UNIQUE,700-12	ﾀｲﾔ	2	[TUJF/EX]
-	06851-70012		TIRE,SOFTONE,700-12	ﾀｲﾔ	2	[TUSF]
-	06841-70012		TIRE,WHITE,700-12	ﾀｲﾔ	2	[TUWF]
-	06843-70012		TIRE,GREEN,700-12	ﾀｲﾔ	2	[TUGF]
A2	23454-40501		RIM-ASSY,500S-12	ﾘﾑｱｯｾﾝ	2	[TSUF][TUJF][TUSF][TUWF] [TUGF] INC.2-6
2	NO PART NO.	#	RIM,INSIDE	ﾘﾑ	2	[TSUF][TUJF][TUSF][TUWF] [TUGF]
3	NO PART NO.	#	RIM,OUTSIDE	ﾘﾑ	2	[TSUF][TUJF][TUSF][TUWF] [TUGF]
4	514A3-82601		BOLT	ﾎﾞﾙﾄ	12	[TSUF][TUJF][TUSF][TUWF] [TUGF]
5	02011-00016		WASHER	ﾜｯｼｬ	12	[TSUF][TUJF][TUSF][TUWF] [TUGF]
6	01400-10016		NUT	ﾅｯﾄ	12	[TSUF][TUJF][TUSF][TUWF] [TUGF]

FIG.83 FRONT WHEEL [TUJF/DR F]

(F7Z24480) フロントホイール

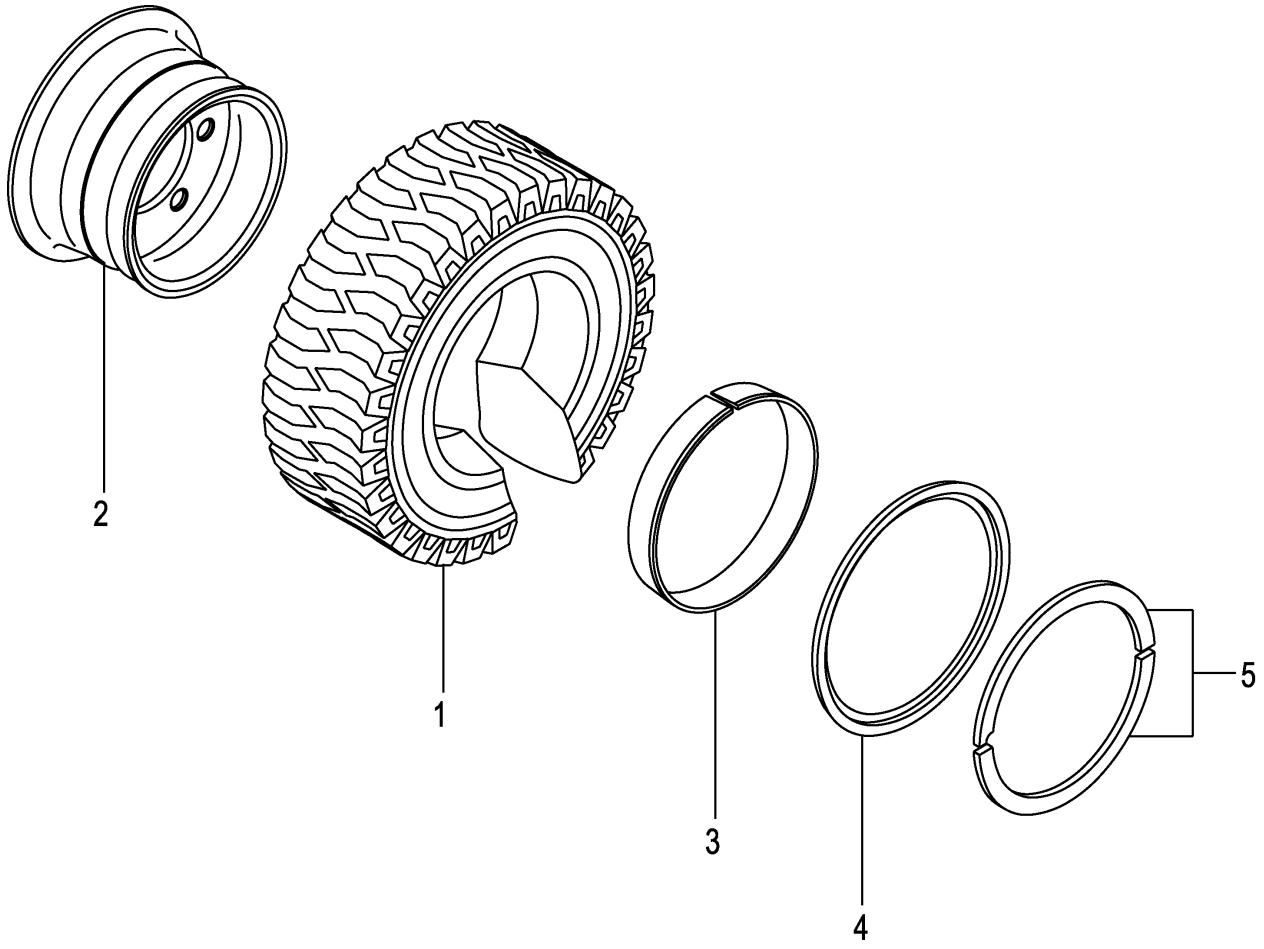

A:FD20C3Z FD20T3Z FD25C3Z FD25T3Z

Item No	Part No.	Mark	Description		Req'd	Remarks : Serial No.
A1	53666-80401		WHEEL-ASSY,FRONT	ﾌﾛﾝﾄﾎｲｰﾙｱｯｾﾝ	2	[TUJF/DR F] INC.1-5
1	06806-70012		TIRE,UNIQUE,700-12	ﾀｲﾔ	2	[TUJF/DR F]
A2	53666-81801		RIM-ASSY,500S-12	ﾘﾑｱｯｾﾝ	2	[TUJF/DR F] INC.2-5
2	NO PART NO.	#	RIM	ﾘﾑ	2	[TUJF/DR F]
3	53656-82041		BAND	ﾊﾞﾝﾄﾞ	2	[TUJF/DR F]
4	53656-82051		FLANGE,SIDE	ﾌﾗﾝｼﾞ	2	[TUJF/DR F]
5	53656-82061		RING,LOCK	ﾘﾝｸﾞ	2	[TUJF/DR F]

FIG.84 FRONT WHEEL [TRAF]

(F7Z24490) フロントホイール

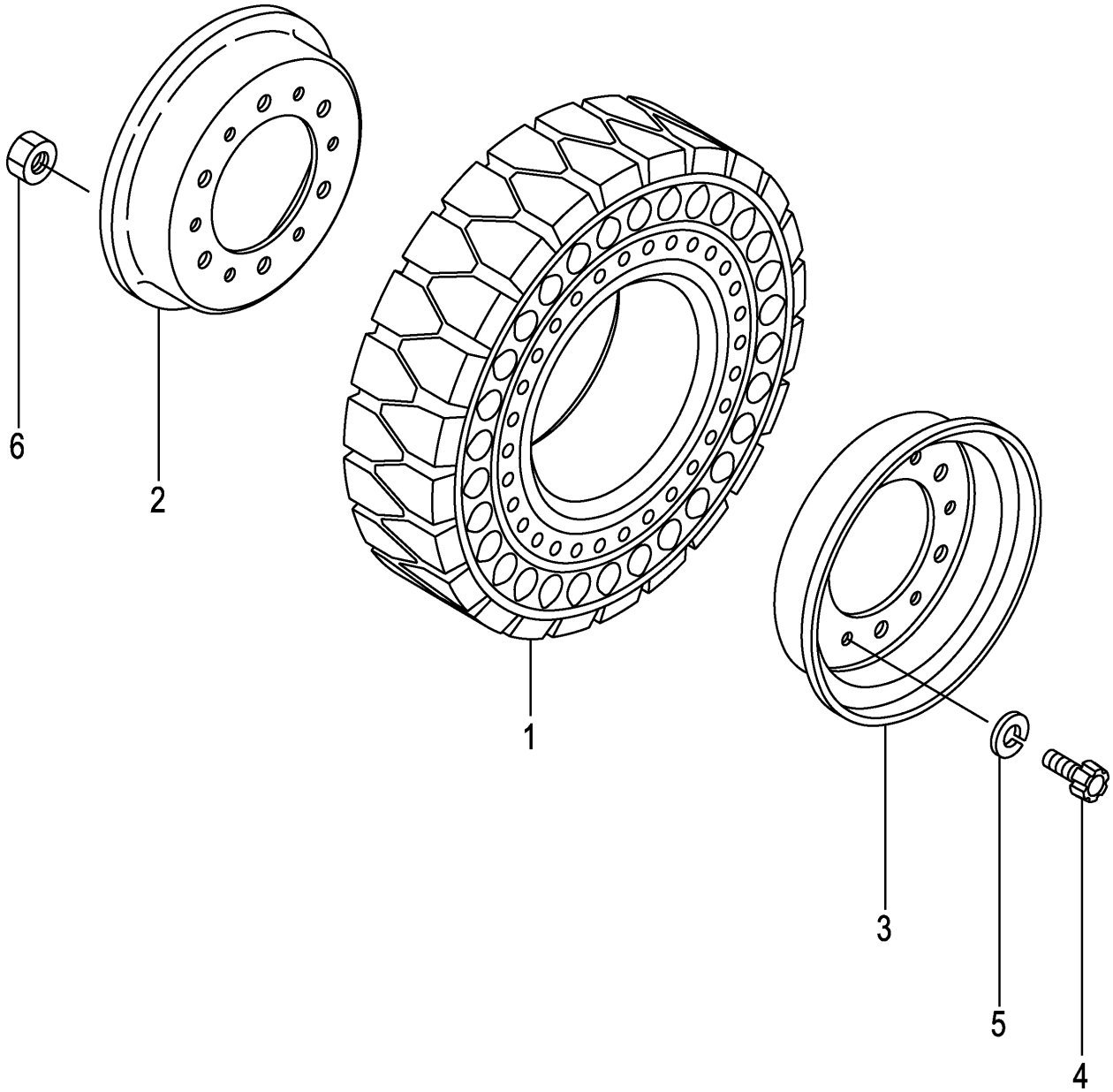

A:FD20C3Z FD20T3Z FD25C3Z FD25T3Z

Item No	Part No.	Mark	Description		Req'd	Remarks : Serial No.
A1	534A6-80171		WHEEL-ASSY,FRONT	ﾌﾛﾝﾄﾎｲｰﾙｱｯｾﾝ	2	[TRAF] INC.1-6
1	534A6-85011		TIRE,AIR-BOSS,700-12	ﾀｲﾔ	2	[TRAF]
A2	23454-40501		RIM-ASSY,500S-12	ﾘﾑｱｯｾﾝ	2	[TRAF] INC.2-6
2	NO PART NO.	#	RIM,INSIDE	ﾘﾑ	2	[TRAF]
3	NO PART NO.	#	RIM,OUTSIDE	ﾘﾑ	2	[TRAF]
4	514A3-82601		BOLT	ﾎﾞﾙﾄ	12	[TRAF]
5	02011-00016		WASHER	ﾜｯｼｬ	12	[TRAF]
6	01400-10016		NUT	ﾅｯﾄ	12	[TRAF]

FIG.85 FRONT WHEEL [TUJSF]

(F7Z244A0) フロントホイール

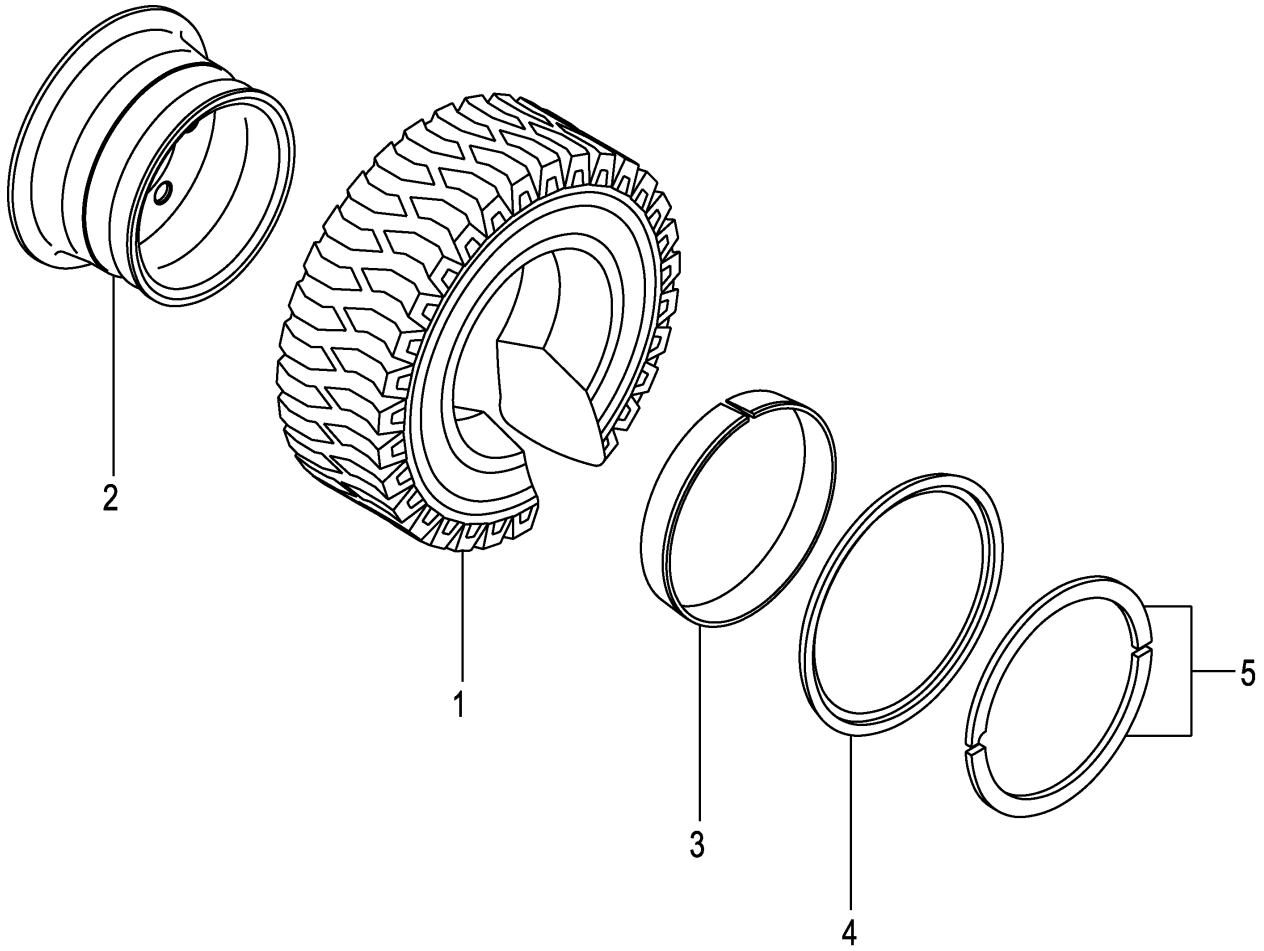

FIG.85

(F7Z244A0)

A:FD20C3Z FD20T3Z FD25C3Z FD25T3Z

Item No	Part No.	Mark	Description		Req'd	Remarks : Serial No.
A1	62156-52501		WHEEL-ASSY,FRONT	ﾌﾛﾝﾄﾎｲｰﾙｱｯｾﾝ	2	[TUJSF] INC.1-5
1	06804-70012		TIRE,UNIQUE,700-12	ﾀｲﾔ	2	[TUJSF]
A2	22854-40201		RIM-ASSY,500S-12	ﾘﾑｱｯｾﾝ	2	[TUJSF] INC.2-5
2	NO PART NO.	#	RIM	ﾘﾑ	2	[TUJSF]
3	53656-82041		BAND	ﾊﾞﾝﾄﾞ	2	[TUJSF]
4	53656-82051		FLANGE,SIDE	ﾌﾗﾝｼﾞ	2	[TUJSF]
5	53656-82061		RING,LOCK	ﾘﾝｸﾞ	2	[TUJSF]

FIG.86 FRONT WHEEL [TJ W][TJSW][TW][TS W]

(F7Z244B0) フロントホイール

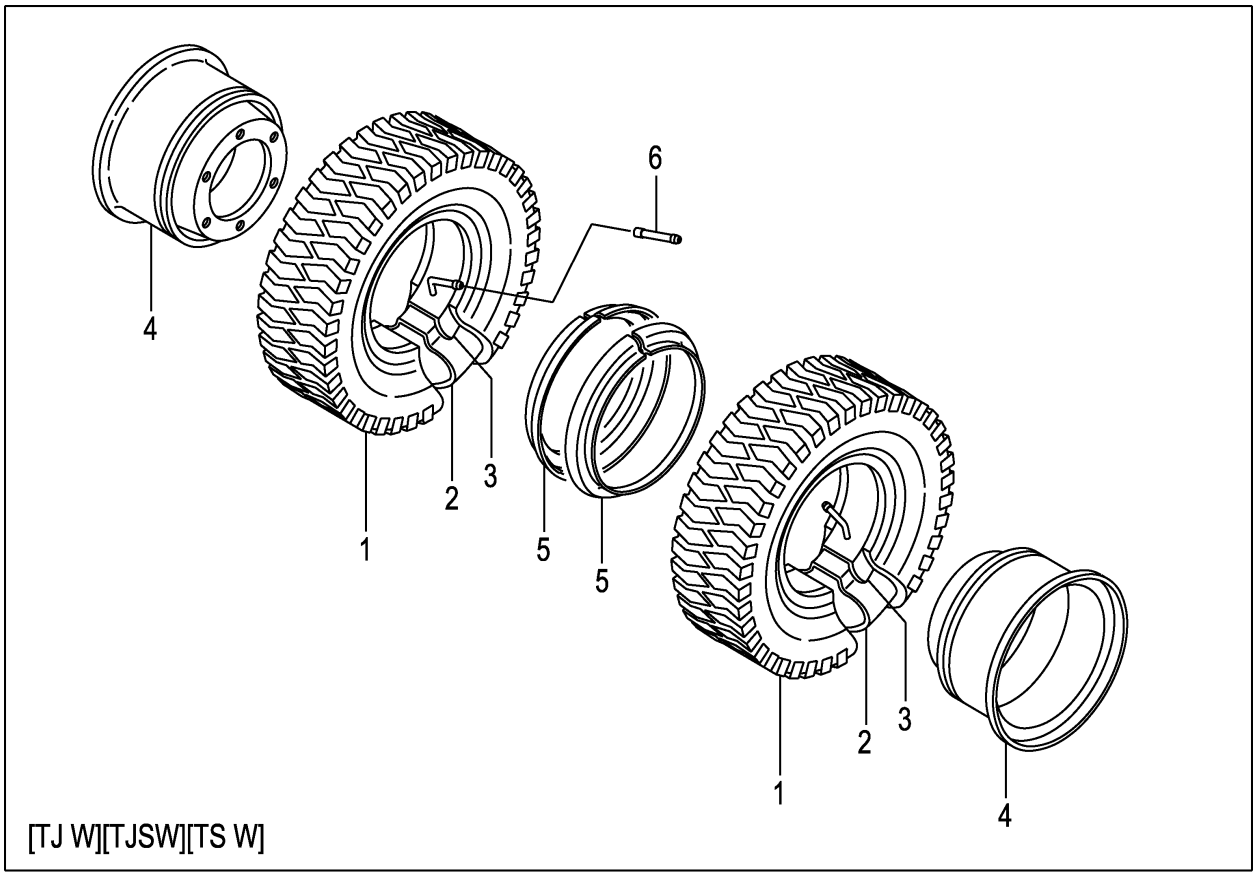

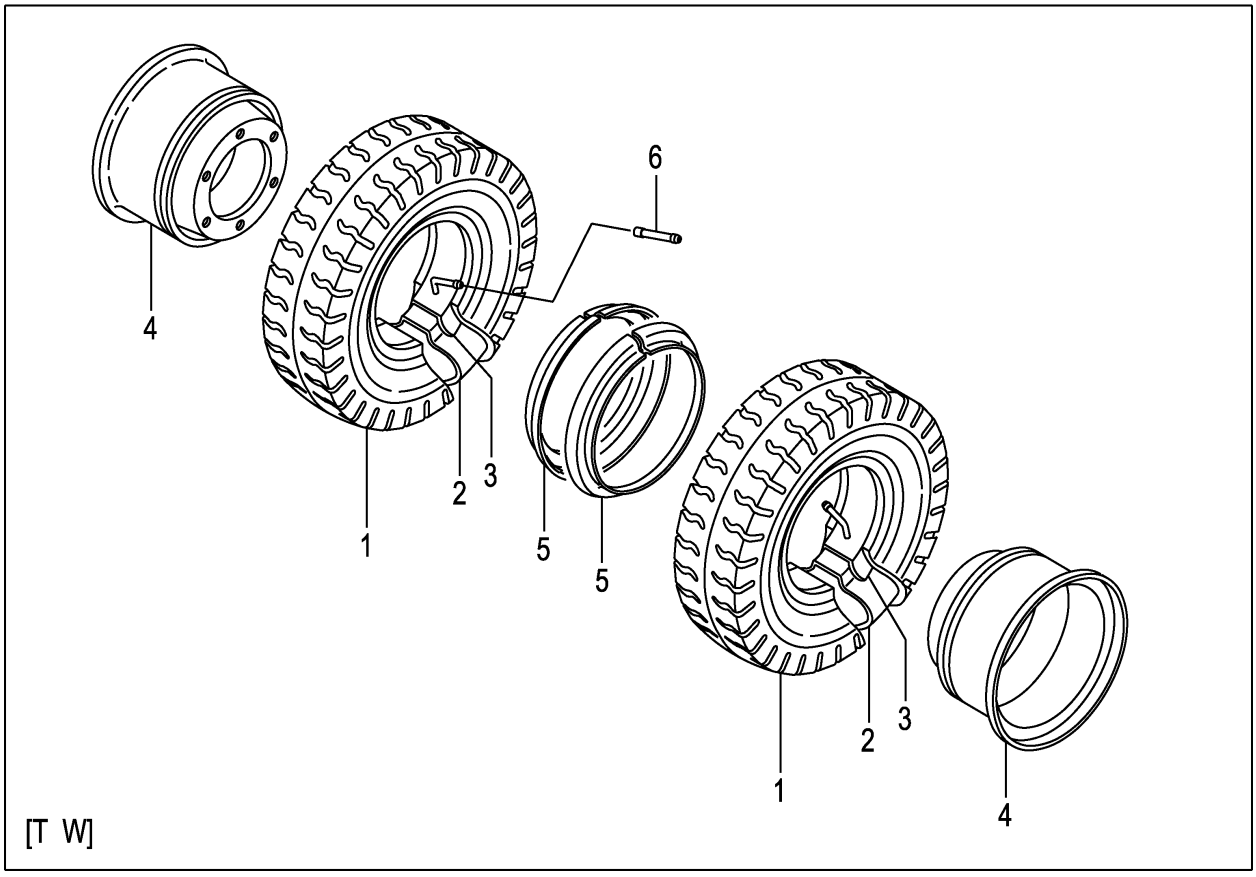

A:FD20C3Z FD20T3Z FD25C3Z FD25T3Z

Item No	Part No.	Mark	Description		Req'd	Remarks : Serial No.
A1	52676-80402		WHEEL-ASSY,FRONT	ﾌﾛﾝﾄﾎｲｰﾙｱｯｾﾝ	4	[TJ W] INC.1-5
-	52676-80202		WHEEL-ASSY,FRONT	ﾌﾛﾝﾄﾎｲｰﾙｱｯｾﾝ	4	[TJSW] INC.1-5
-	53457-40003		WHEEL-ASSY,FRONT	ﾌﾛﾝﾄﾎｲｰﾙｱｯｾﾝ	4	[T W] INC.1-5
-	52676-80302		WHEEL-ASSY,FRONT	ﾌﾛﾝﾄﾎｲｰﾙｱｯｾﾝ	4	[TS W] INC.1-5
1	06006-55015		TIRE,550-15-8	ﾀｲﾔ	4	[TJ W]
-	06005-55015		TIRE,550-15-8	ﾀｲﾔ	4	[TJSW]
-	06001-55015		TIRE,550-15-8	ﾀｲﾔ	4	[T W]
-	06007-55015		TIRE,550-15-8	ﾀｲﾔ	4	[TS W]
2	06711-55015		TUBE,550-15-8T	ﾁｭｰﾌﾞ	4	[TJ W][TJSW][T W][TS W]
3	06701-55015		FLAP,550-15-8F	ﾌﾗｯﾌﾟ	4	[TJ W][TJSW][T W][TS W]
A2	53657-42053		RIM-ASSY,450E-15	ﾘﾑｱｯｾﾝ	4	[TJ W][TJSW][T W][TS W] INC.4,5
4	NO PART NO.	#	RIM & DISK	ﾘﾑ & ﾃﾞｨｽｸ	4	[TJ W][TJSW][T W][TS W]
5	53457-42151		RING,SIDE	ﾘﾝｸﾞ	4	[TJ W][TJSW][T W][TS W]
6	06731-00120		TUBE,EXTENSION	ﾁｭｰﾌﾞ	2	[TJ W][TJSW][T W][TS W]

FIG.87 FRONT WHEEL [TUJW][TUSW][TUWW][TUGW]

(F7Z244C0) フロントホイール

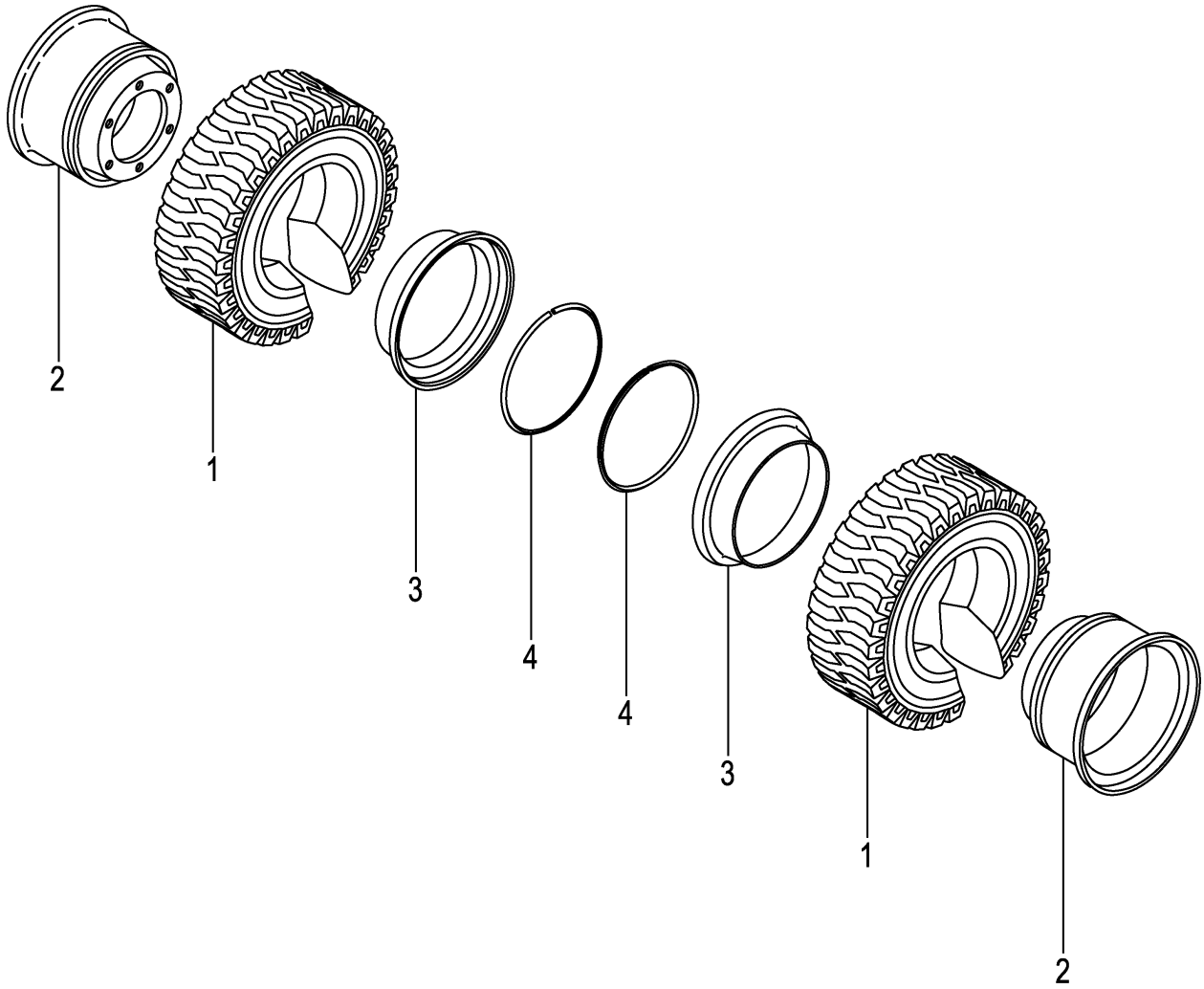

A:FD20C3Z FD20T3Z FD25C3Z FD25T3Z

Item No	Part No.	Mark	Description		Req'd	Remarks : Serial No.
A1	52676-80802		WHEEL-ASSY,FRONT	ﾌﾛﾝﾄﾎｲｰﾙｱｯｾﾝ	4	[TUJW] INC.1-4
-	522A6-80321		WHEEL-ASSY,FRONT	ﾌﾛﾝﾄﾎｲｰﾙｱｯｾﾝ	4	[TUSW] INC.1-4
-	522A6-80301		WHEEL-ASSY,FRONT	ﾌﾛﾝﾄﾎｲｰﾙｱｯｾﾝ	4	[TUWW] INC.1-4
-	522A6-80311		WHEEL-ASSY,FRONT	ﾌﾛﾝﾄﾎｲｰﾙｱｯｾﾝ	4	[TUGW] INC.1-4
1	06806-55015		TIRE,UNIQUE,550-15	ﾀｲﾔ	4	[TUJW]
-	06851-55015		TIRE,SOFTONE,550-15	ﾀｲﾔ	4	[TUSW]
-	06841-55015		TIRE,WHITE,550-15	ﾀｲﾔ	4	[TUWW]
-	06843-55015		TIRE,GREEN,550-15	ﾀｲﾔ	4	[TUGW]
A2	53656-82001		RIM-ASSY,450E-15	ﾘﾑｱｯｾﾝ	4	[TUJW][TUSW][TUWW][TUGW] INC.2-4
2	NO PART NO.	#	RIM	ﾘﾑ	4	[TUJW][TUSW][TUWW][TUGW]
3	53456-82052		RING,SIDE	ﾘﾝｸﾞ	4	[TUJW][TUSW][TUWW][TUGW]
4	53456-82062		RING,LOCK	ﾘﾝｸﾞ	4	[TUJW][TUSW][TUWW][TUGW]

FIG.88 FRONT WHEEL [TJ W70][TJSW70][TW70][TS W70]

(F7Z244D0) フロントホイール

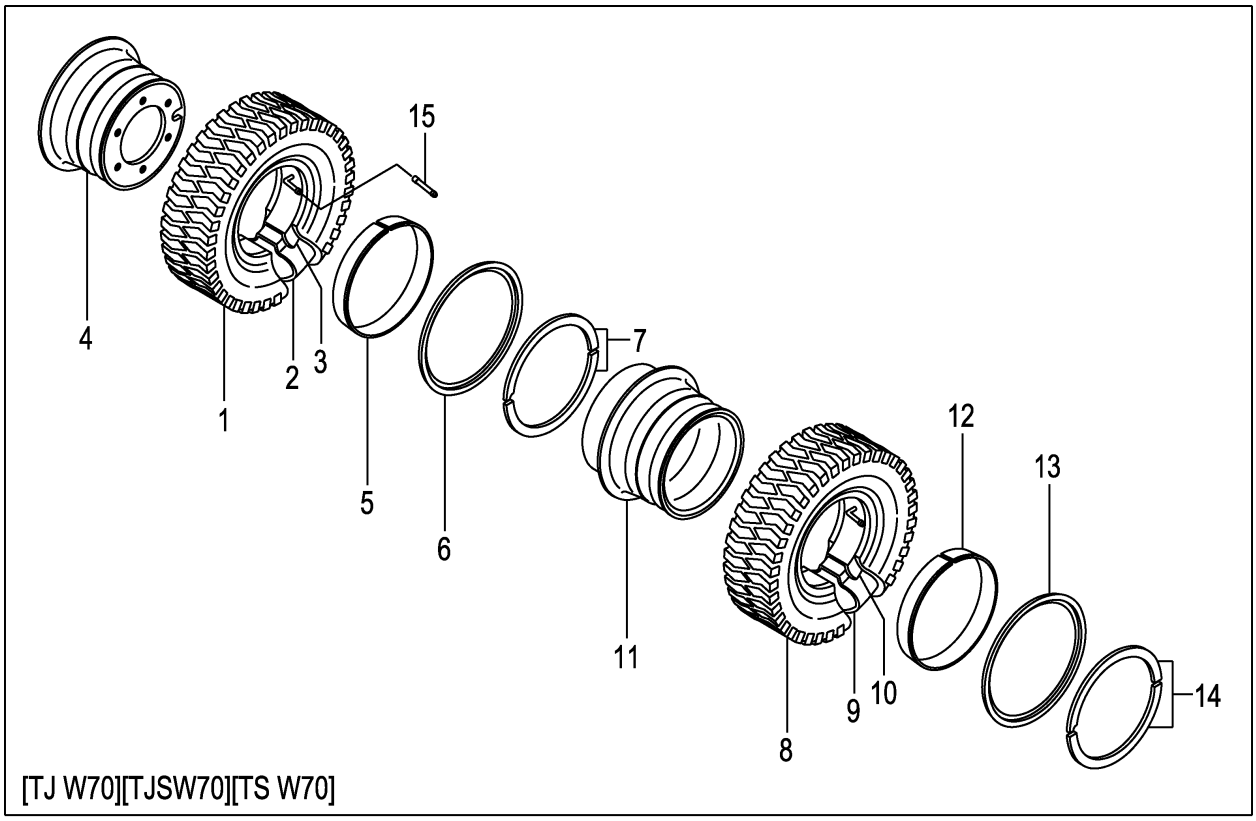

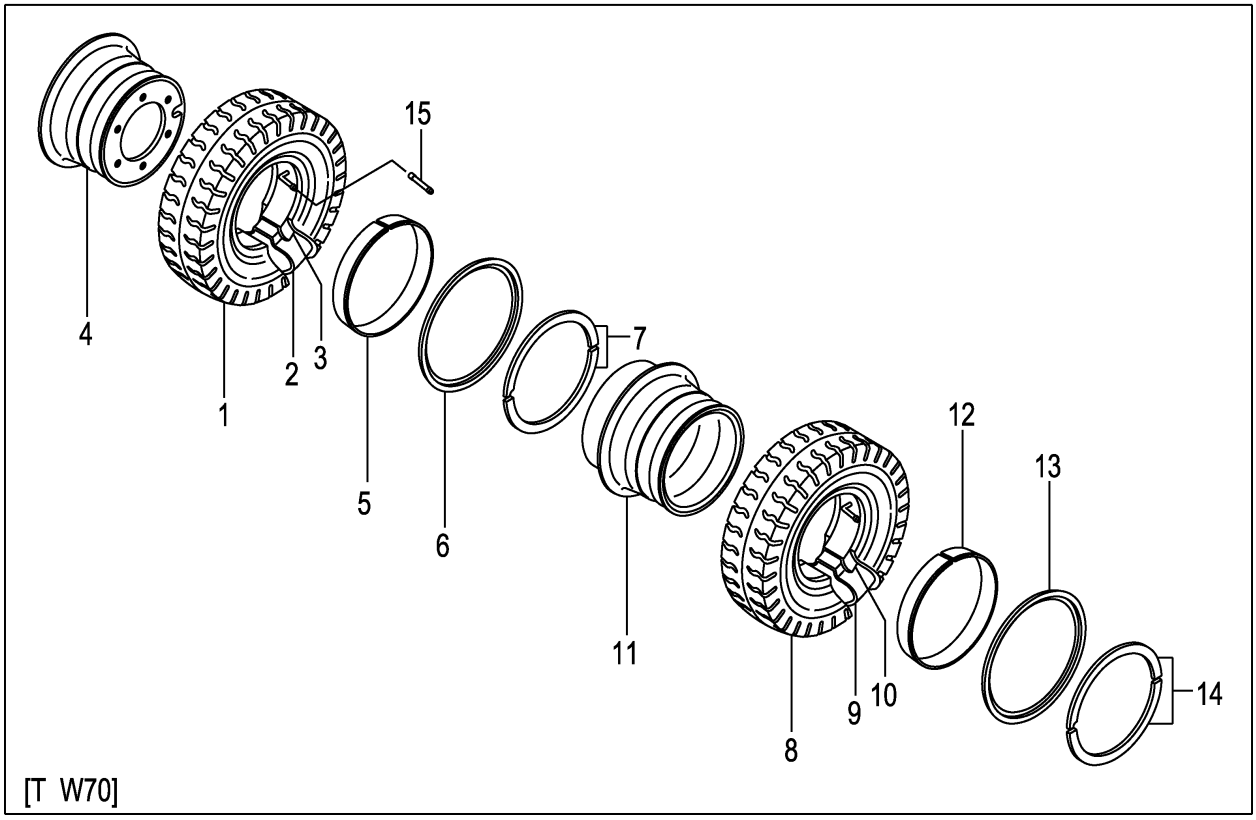

A:FD20C3Z FD20T3Z FD25C3Z FD25T3Z

Item No	Part No.	Mark	Description		Req'd	Remarks : Serial No.
A1	53656-80601		WHEEL-ASSY,FRONT	ﾌﾛﾝﾄﾎｲｰﾙｱｯｾﾝ	2	[TJ W70] INC.1-7
-	53656-80501		WHEEL-ASSY,FRONT	ﾌﾛﾝﾄﾎｲｰﾙｱｯｾﾝ	2	[TJSW70] INC.1-7
-	53656-80201		WHEEL-ASSY,FRONT	ﾌﾛﾝﾄﾎｲｰﾙｱｯｾﾝ	2	[T W70] INC.1-7
-	53656-80701		WHEEL-ASSY,FRONT	ﾌﾛﾝﾄﾎｲｰﾙｱｯｾﾝ	2	[TS W70] INC.1-7
1	06006-70012		TIRE,700-12-12	ﾀｲﾔ	2	[TJ W70]
-	06005-70012		TIRE,700-12-12	ﾀｲﾔ	2	[TJSW70]
-	06001-70012		TIRE,700-12-12	ﾀｲﾔ	2	[T W70]
-	06007-70012		TIRE,700-12-12	ﾀｲﾔ	2	[TS W70]
2	06711-70012		TUBE,700-12-12T	ﾁｭｰﾌﾞ	2	[TJ W70][TJSW70][T W70] [TS W70]
3	06701-70012		FLAP,700-12-12F	ﾌﾗｯﾌﾟ	2	[TJ W70][TJSW70][T W70] [TS W70]
A2	53656-80901		RIM-ASSY,500S-12TD	ﾘﾑｱｯｾﾝ	2	[TJ W70][TJSW70][T W70] [TS W70] INC.4-7
4	NO PART NO.	#	RIM	ﾘﾑ	2	[TJ W70][TJSW70][T W70] [TS W70]
5	53656-82041		BAND	ﾊﾞﾝﾄﾞ	2	[TJ W70][TJSW70][T W70] [TS W70]
6	53656-82051		FLANGE,SIDE	ﾌﾗﾝｼﾞ	2	[TJ W70][TJSW70][T W70] [TS W70]
7	53656-82061		RING,LOCK	ﾘﾝｸﾞ	2	[TJ W70][TJSW70][T W70] [TS W70]
A3	53656-80611		WHEEL-ASSY,FRONT	ﾌﾛﾝﾄﾎｲｰﾙｱｯｾﾝ	2	[TJ W70] INC.8-14
-	53656-80511		WHEEL-ASSY,FRONT	ﾌﾛﾝﾄﾎｲｰﾙｱｯｾﾝ	2	[TJSW70] INC.8-14
-	53656-80211		WHEEL-ASSY,FRONT	ﾌﾛﾝﾄﾎｲｰﾙｱｯｾﾝ	2	[T W70] INC.8-14
-	53656-80711		WHEEL-ASSY,FRONT	ﾌﾛﾝﾄﾎｲｰﾙｱｯｾﾝ	2	[TS W70] INC.8-14
8	06006-70012		TIRE,700-12-12	ﾀｲﾔ	2	[TJ W70]
-	06005-70012		TIRE,700-12-12	ﾀｲﾔ	2	[TJSW70]
-	06001-70012		TIRE,700-12-12	ﾀｲﾔ	2	[T W70]
-	06007-70012		TIRE,700-12-12	ﾀｲﾔ	2	[TS W70]
9	06711-70012		TUBE,700-12-12T	ﾁｭｰﾌﾞ	2	[TJ W70][TJSW70][T W70] [TS W70]
10	06701-70012		FLAP,700-12-12F	ﾌﾗｯﾌﾟ	2	[TJ W70][TJSW70][T W70] [TS W70]
A4	53656-80911		RIM-ASSY,500S-12TD	ﾘﾑｱｯｾﾝ	2	[TJ W70][TJSW70][T W70] [TS W70] INC.11-14
11	NO PART NO.	#	RIM	ﾘﾑ	2	[TJ W70][TJSW70][T W70] [TS W70]
12	53656-82041		BAND	ﾊﾞﾝﾄﾞ	2	[TJ W70][TJSW70][T W70] [TS W70]
13	53656-82051		FLANGE,SIDE	ﾌﾗﾝｼﾞ	2	[TJ W70][TJSW70][T W70] [TS W70]
14	53656-82061		RING,LOCK	ﾘﾝｸﾞ	2	[TJ W70][TJSW70][T W70] [TS W70]
15	06731-00120		TUBE,EXTENSION	ﾁｭｰﾌﾞ	2	[TJ W70][TJSW70][T W70] [TS W70]

FIG.89 FRONT WHEEL [TUJW70][TUSW70][TUWW70][TUGW70]

(F7Z244E0) フロントホイール

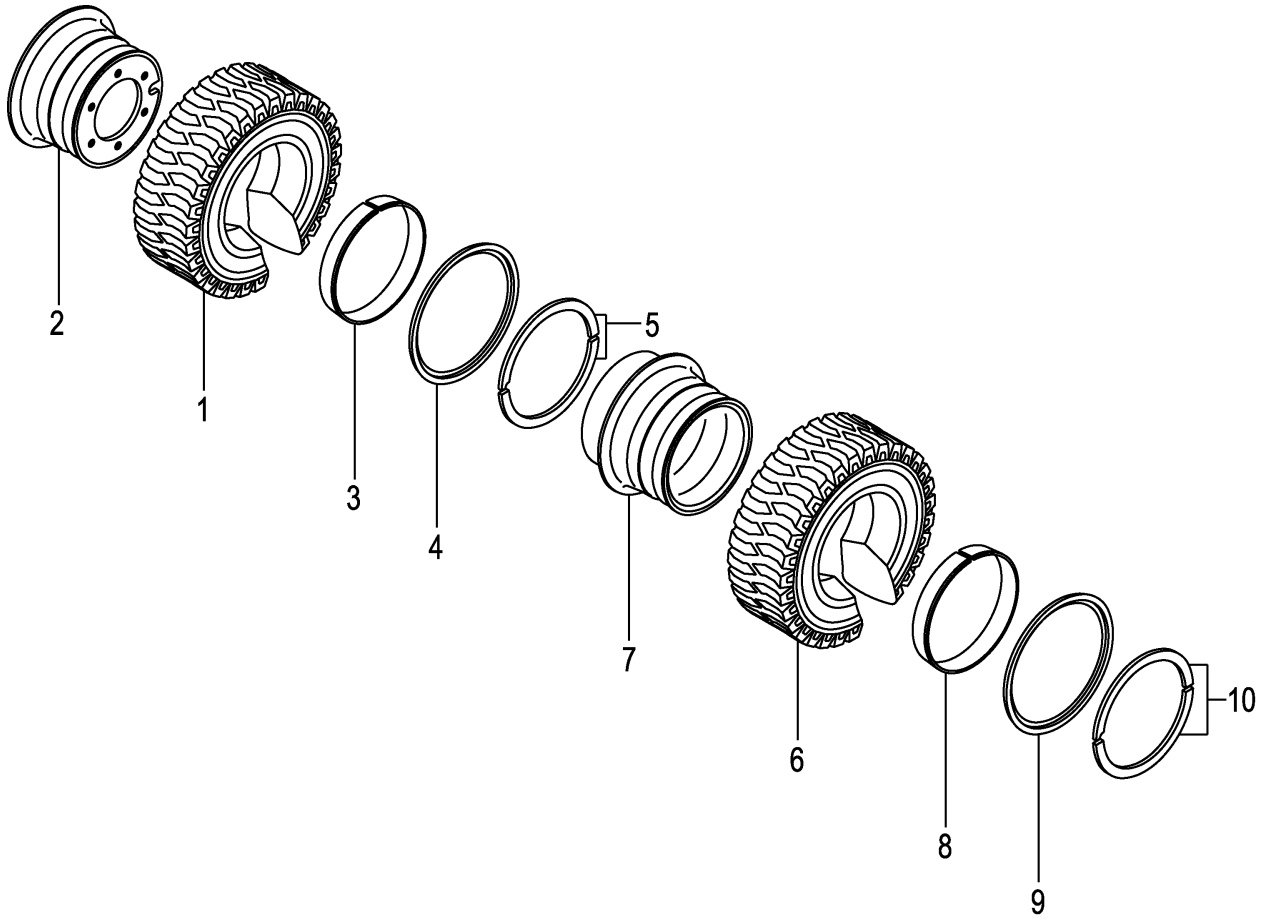

A:FD20C3Z FD20T3Z FD25C3Z FD25T3Z

Item No	Part No.	Mark	Description		Req'd	Remarks : Serial No.
A1	53656-80401		WHEEL-ASSY,FRONT	ﾌﾛﾝﾄﾎｲｰﾙｱｯｾﾝ	2	[TUJW70] INC.1-5
-	522A6-80441		WHEEL-ASSY,FRONT	ﾌﾛﾝﾄﾎｲｰﾙｱｯｾﾝ	2	[TUSW70] INC.1-5
-	522A6-80401		WHEEL-ASSY,FRONT	ﾌﾛﾝﾄﾎｲｰﾙｱｯｾﾝ	2	[TUWW70] INC.1-5
-	522A6-80421		WHEEL-ASSY,FRONT	ﾌﾛﾝﾄﾎｲｰﾙｱｯｾﾝ	2	[TUGW70] INC.1-5
1	06806-70012		TIRE,UNIQUE,700-12	ﾀｲﾔ	2	[TUJW70]
-	06851-70012		TIRE,SOFTONE,700-12	ﾀｲﾔ	2	[TUSW70]
-	06841-70012		TIRE,WHITE,700-12	ﾀｲﾔ	2	[TUWW70]
-	06843-70012		TIRE,GREEN,700-12	ﾀｲﾔ	2	[TUGW70]
A2	53656-80901		RIM-ASSY,500S-12TD	ﾘﾑｱｯｾﾝ	2	[TUJW70][TUSW70][TUWW70] [TUGW70] INC.2-5
2	NO PART NO.	#	RIM	ﾘﾑ	2	[TUJW70][TUSW70][TUWW70] [TUGW70]
3	53656-82041		BAND	ﾊﾞﾝﾄﾞ	2	[TUJW70][TUSW70][TUWW70] [TUGW70]
4	53656-82051		FLANGE,SIDE	ﾌﾗﾝｼﾞ	2	[TUJW70][TUSW70][TUWW70] [TUGW70]
5	53656-82061		RING,LOCK	ﾘﾝｸﾞ	2	[TUJW70][TUSW70][TUWW70] [TUGW70]
A3	53656-80411		WHEEL-ASSY,FRONT	ﾌﾛﾝﾄﾎｲｰﾙｱｯｾﾝ	2	[TUJW70] INC.6-10
-	522A6-80451		WHEEL-ASSY,FRONT	ﾌﾛﾝﾄﾎｲｰﾙｱｯｾﾝ	2	[TUSW70] INC.6-10
-	522A6-80411		WHEEL-ASSY,FRONT	ﾌﾛﾝﾄﾎｲｰﾙｱｯｾﾝ	2	[TUWW70] INC.6-10
-	522A6-80431		WHEEL-ASSY,FRONT	ﾌﾛﾝﾄﾎｲｰﾙｱｯｾﾝ	2	[TUGW70] INC.6-10
6	06806-70012		TIRE,UNIQUE,700-12	ﾀｲﾔ	2	[TUJW70]
-	06851-70012		TIRE,SOFTONE,700-12	ﾀｲﾔ	2	[TUSW70]
-	06841-70012		TIRE,WHITE,700-12	ﾀｲﾔ	2	[TUWW70]
-	06843-70012		TIRE,GREEN,700-12	ﾀｲﾔ	2	[TUGW70]
A4	53656-80911		RIM-ASSY,500S-12TD	ﾘﾑｱｯｾﾝ	2	[TUJW70][TUSW70][TUWW70] [TUGW70] INC.7-10
7	NO PART NO.	#	RIM	ﾘﾑ	2	[TUJW70][TUSW70][TUWW70] [TUGW70]
8	53656-82041		BAND	ﾊﾞﾝﾄﾞ	2	[TUJW70][TUSW70][TUWW70] [TUGW70]
9	53656-82051		FLANGE,SIDE	ﾌﾗﾝｼﾞ	2	[TUJW70][TUSW70][TUWW70] [TUGW70]
10	53656-82061		RING,LOCK	ﾘﾝｸﾞ	2	[TUJW70][TUSW70][TUWW70] [TUGW70]

FIG.90 REAR WHEEL

(F7Z244F0) リヤーホイール

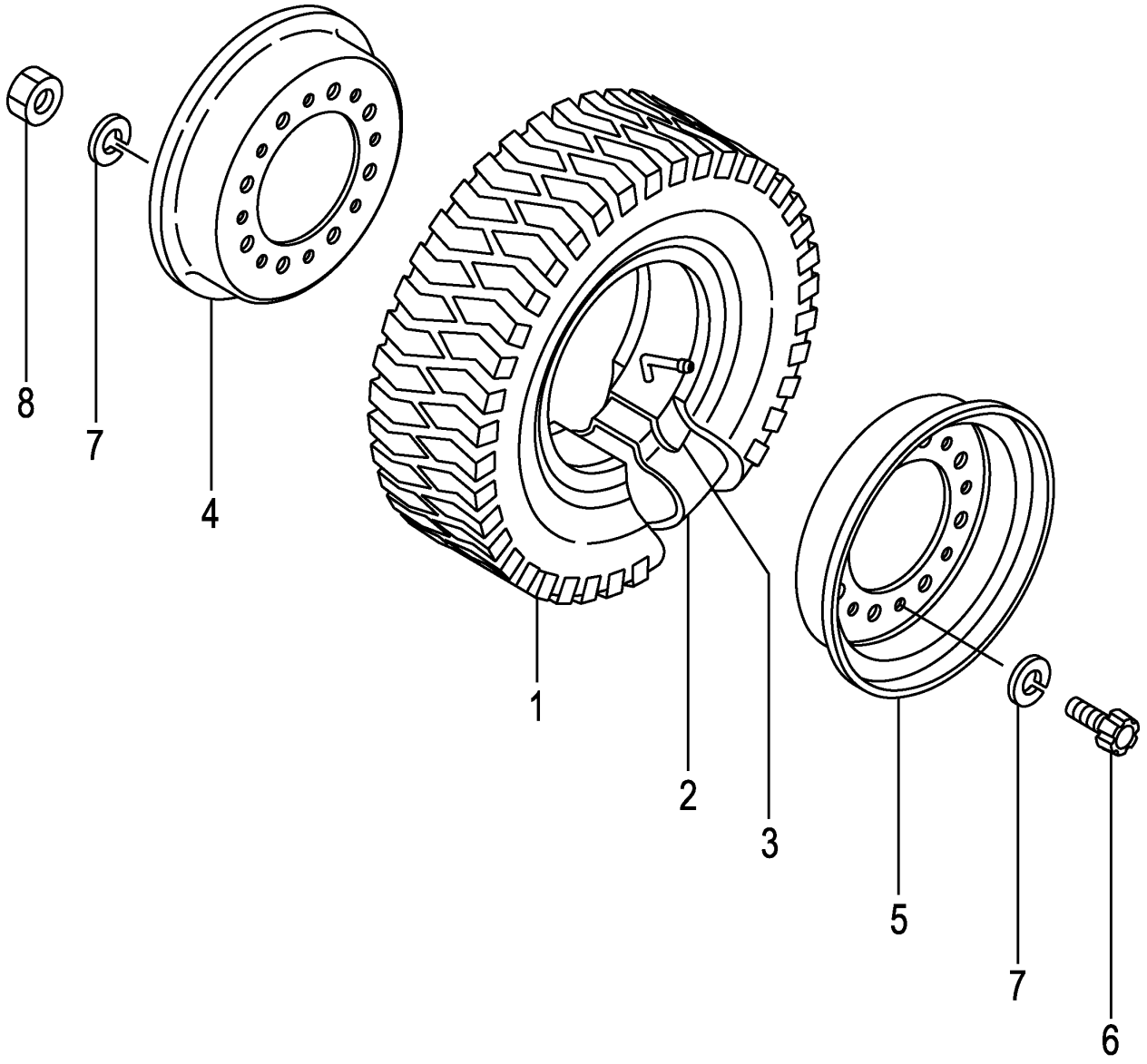

A:FD20C3Z FD20T3Z FD25C3Z FD25T3Z

Item No	Part No.	Mark	Description		Req'd	Remarks : Serial No.
A1	53656-81501		WHEEL-ASSY,REAR	ﾘﾔｰﾎｲｰﾙｱｯｾﾝ	2	INC.1-8
1	06006-60009		TIRE,600-9-10	ﾀｲﾔ	2	
2	06712-60009		TUBE,600-9-10T	ﾁｭｰﾌﾞ	2	
3	06702-60009		FLAP,600-9-10F	ﾌﾗｯﾌﾟ	2	
A2	23654-40501		RIM-ASSY,400E-9	ﾘﾑｱｯｾﾝ	2	INC.4-8
4	NO PART NO.	#	RIM,INSIDE	ﾘﾑ	2	
5	NO PART NO.	#	RIM,OUTSIDE	ﾘﾑ	2	
6	534F3-82001		BOLT	ﾎﾞﾙﾄ	16	
7	02011-00012		WASHER	ﾜｯｼｬ	32	
8	01400-00012		NUT	ﾅｯﾄ	16	

FIG.91 REAR WHEEL [DR R]

(F7Z244G0) リヤーホイール

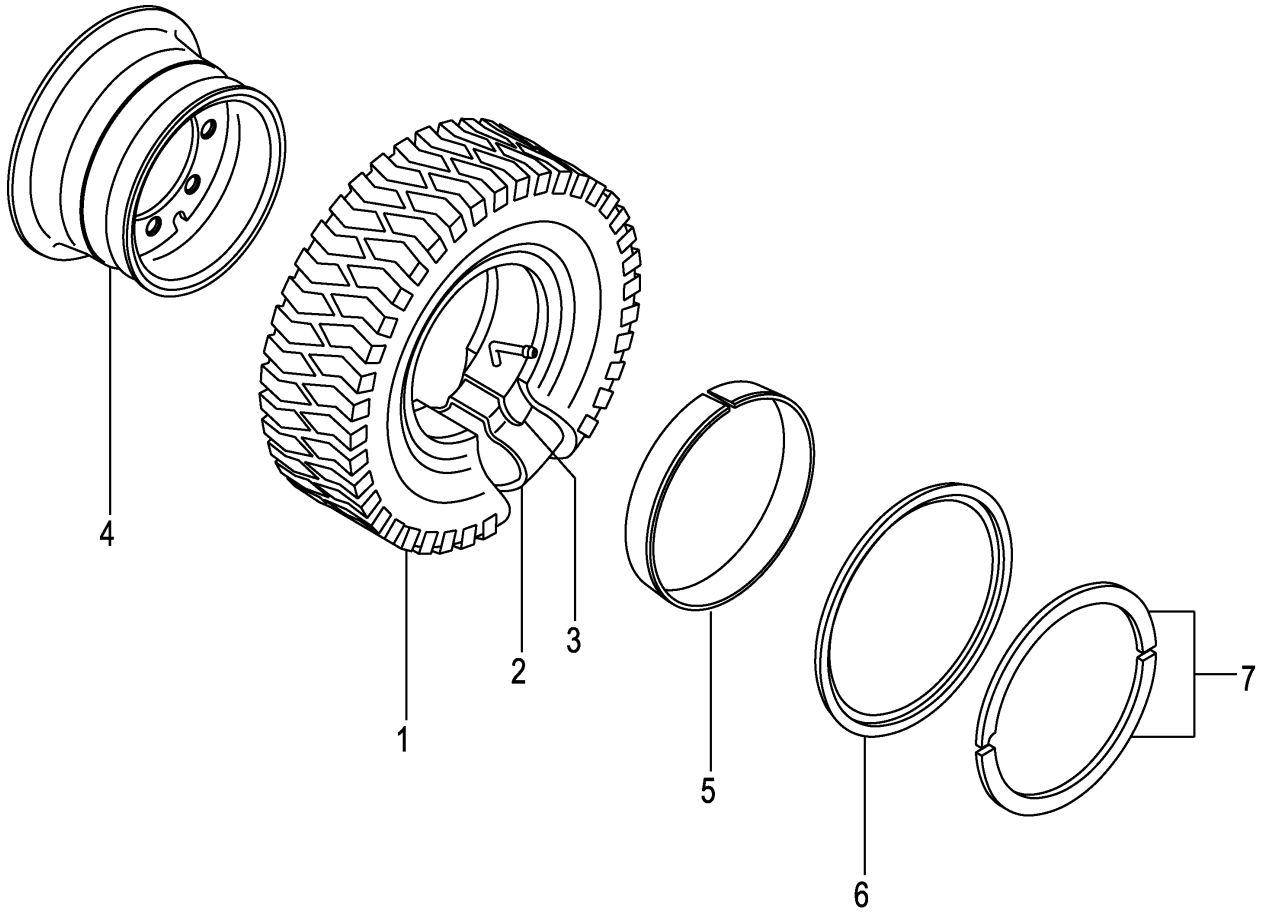

A:FD20C3Z FD20T3Z FD25C3Z FD25T3Z

Item No	Part No.	Mark	Description		Req'd	Remarks : Serial No.
A1	53666-81501		WHEEL-ASSY,REAR	ﾘﾔｰﾎｲｰﾙｱｯｾﾝ	2	[DR R] INC.1-7
1	06006-60009		TIRE,600-9-10	ﾀｲﾔ	2	[DR R]
2	06712-60009		TUBE,600-9-10T	ﾁｭｰﾌﾞ	2	[DR R]
3	06702-60009		FLAP,600-9-10F	ﾌﾗｯﾌﾟ	2	[DR R]
A2	53666-81901		RIM-ASSY,400E-9	ﾘﾑｱｯｾﾝ	2	[DR R] INC.4-7
4	NO PART NO.	#	RIM	ﾘﾑ	2	[DR R]
5	53666-82021		BAND	ﾊﾞﾝﾄﾞ	2	[DR R]
6	53666-82031		FLANGE,SIDE	ﾌﾗﾝｼﾞ	2	[DR R]
7	53666-82041		RING,LOCK	ﾘﾝｸﾞ	2	[DR R]

FIG.92 REAR WHEEL [TJ R][TJSR][TR][TS R]

(F7Z244H0) リヤーホイール

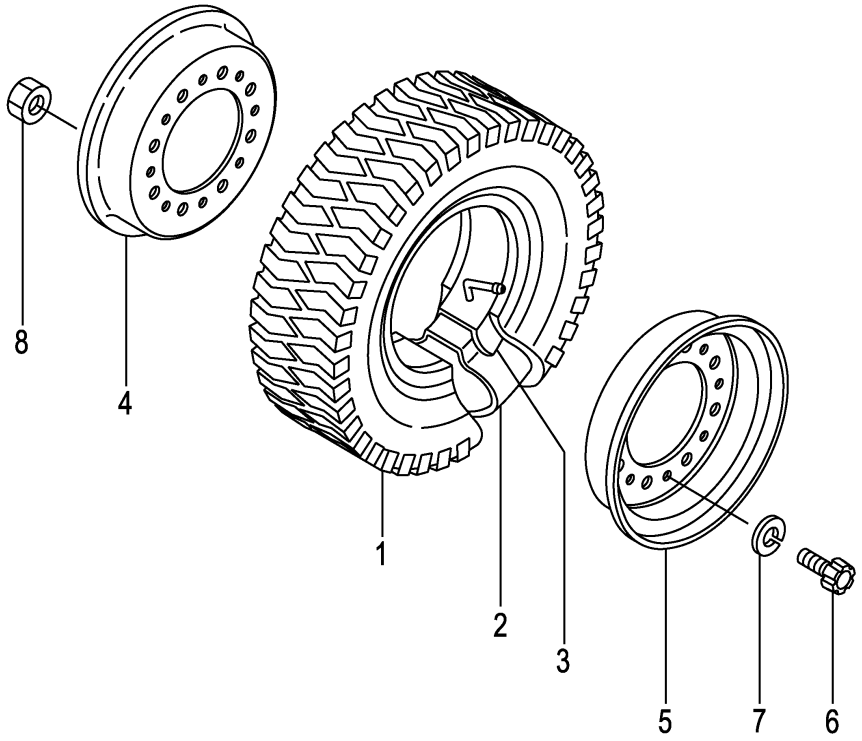

[TJ R][TJSR][TS R]

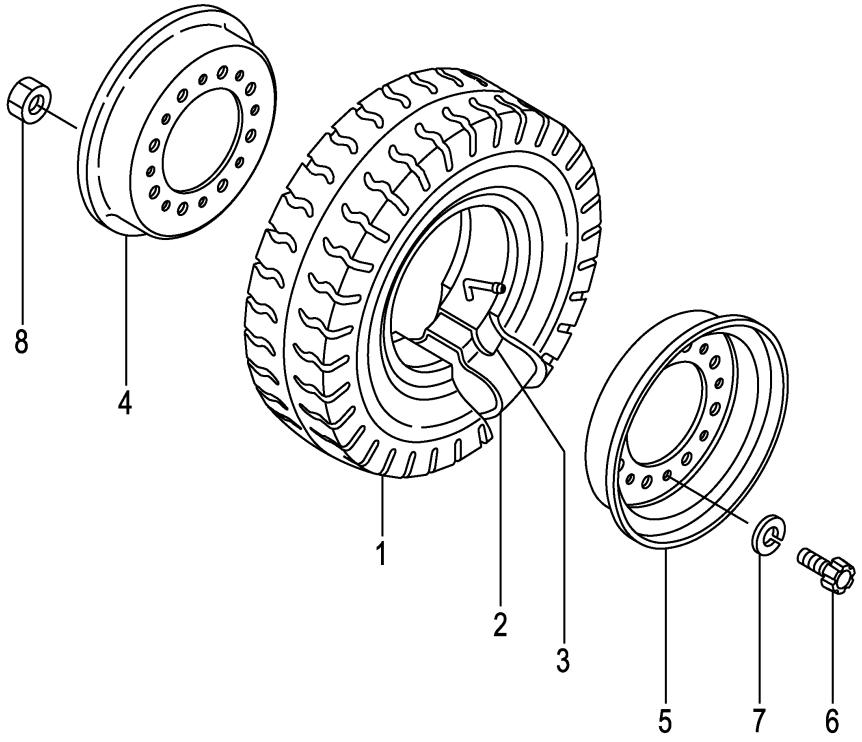

[T R]

FIG.92
(F7Z244H0)

A:FD20C3Z FD20T3Z FD25C3Z FD25T3Z

Item No	Part No.	Mark	Description		Req'd	Remarks : Serial No.
A1	53656-81501		WHEEL-ASSY,REAR	ﾘﾔｰﾎｲｰﾙｱｯｾﾝ	2	[TJ R] INC.1-8
-	53656-81401		WHEEL-ASSY,REAR	ﾘﾔｰﾎｲｰﾙｱｯｾﾝ	2	[TJSR] INC.1-8
-	23654-40511		WHEEL-ASSY,REAR	ﾘﾔｰﾎｲｰﾙｱｯｾﾝ	2	[T R] INC.1-8
-	53656-81601		WHEEL-ASSY,REAR	ﾘﾔｰﾎｲｰﾙｱｯｾﾝ	2	[TS R] INC.1-8
1	06006-60009		TIRE,600-9-10	ﾀｲﾔ	2	[TJ R]
-	06005-60009		TIRE,600-9-10	ﾀｲﾔ	2	[TJSR]
-	06001-60009		TIRE,600-9-10	ﾀｲﾔ	2	[T R]
-	06007-60009		TIRE,600-9-10	ﾀｲﾔ	2	[TS R]
2	06712-60009		TUBE,600-9-10T	ﾁｭｰﾌﾞ	2	[TJ R][TJSR][T R][TS R]
3	06702-60009		FLAP,600-9-10F	ﾌﾗｯﾌﾟ	2	[TJ R][TJSR][T R][TS R]
A2	23654-40501		RIM-ASSY,400E-9	ﾘﾑｱｯｾﾝ	2	[TJ R][TJSR][T R][TS R] INC.4-8
4	NO PART NO.	#	RIM,INSIDE	ﾘﾑ	2	[TJ R][TJSR][T R][TS R]
5	NO PART NO.	#	RIM,OUTSIDE	ﾘﾑ	2	[TJ R][TJSR][T R][TS R]
6	534F3-82001		BOLT	ﾎﾞﾙﾄ	16	[TJ R][TJSR][T R][TS R]
7	02011-00012		WASHER	ﾜｯｼｬ	32	[TJ R][TJSR][T R][TS R]
8	01400-00012		NUT	ﾅｯﾄ	16	[TJ R][TJSR][T R][TS R]

FIG.93 REAR WHEEL [(TJ R,TJSR,TR,TS R)/DR R]

(F7Z244J0) リヤーホイール

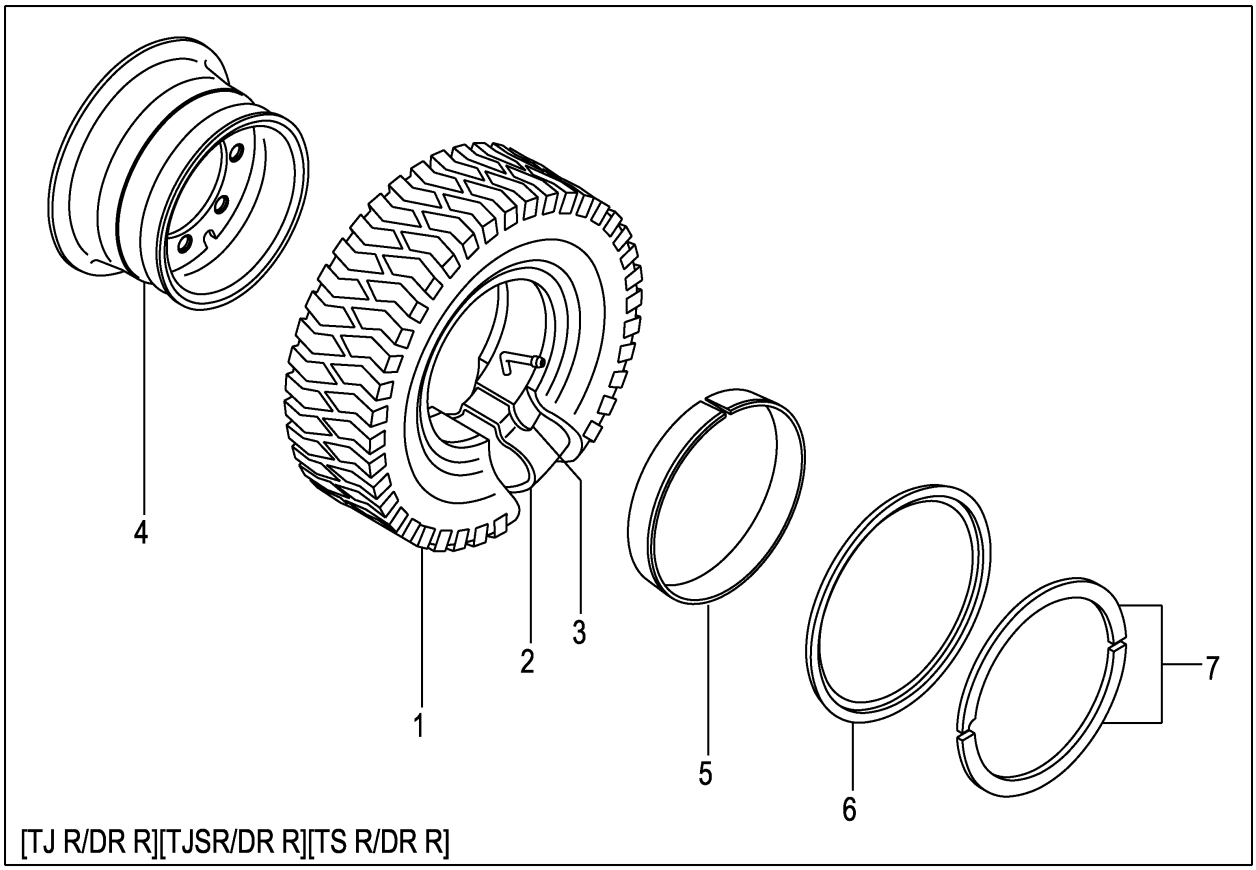

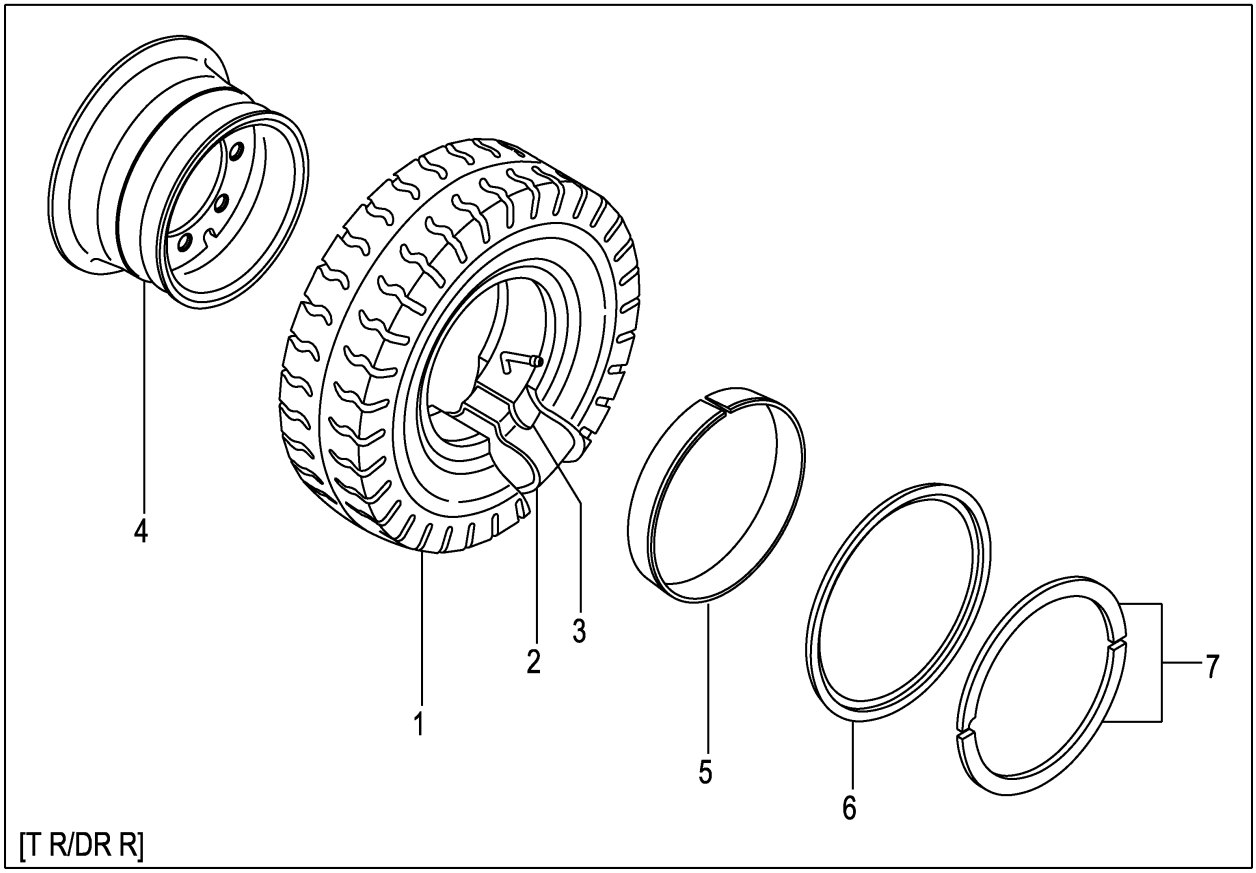

A:FD20C3Z FD20T3Z FD25C3Z FD25T3Z

Item No	Part No.	Mark	Description		Req'd	Remarks : Serial No.
A1	53666-81501		WHEEL-ASSY,REAR	ﾘﾔｰﾎｲｰﾙｱｯｾﾝ	2	[TJ R/DR R] INC.1-7
-	53666-81401		WHEEL-ASSY,REAR	ﾘﾔｰﾎｲｰﾙｱｯｾﾝ	2	[TJSR/DR R] INC.1-7
-	53666-80901		WHEEL-ASSY,REAR	ﾘﾔｰﾎｲｰﾙｱｯｾﾝ	2	[T R/DR R] INC.1-7
-	53666-81601		WHEEL-ASSY,REAR	ﾘﾔｰﾎｲｰﾙｱｯｾﾝ	2	[TS R/DR R] INC.1-7
1	06006-60009		TIRE,600-9-10	ﾀｲﾔ	2	[TJ R/DR R]
-	06005-60009		TIRE,600-9-10	ﾀｲﾔ	2	[TJSR/DR R]
-	06001-60009		TIRE,600-9-10	ﾀｲﾔ	2	[T R/DR R]
-	06007-60009		TIRE,600-9-10	ﾀｲﾔ	2	[TS R/DR R]
2	06712-60009		TUBE,600-9-10T	ﾁｭｰﾌﾞ	2	[TJ R/DR R][TJSR/DR R]
						[T R/DR R][TS R/DR R]
3	06702-60009		FLAP,600-9-10F	ﾌﾗｯﾌﾟ	2	[TJ R/DR R][TJSR/DR R]
						[T R/DR R][TS R/DR R]
A2	53666-81901		RIM-ASSY,400E-9	ﾘﾑｱｯｾﾝ	2	[TJ R/DR R][TJSR/DR R] INC.4-7
-	53666-81901		RIM-ASSY,400E-9	ﾘﾑｱｯｾﾝ	2	[T R/DR R][TS R/DR R] INC.4-7
4	NO PART NO.	#	RIM	ﾘﾑ	2	[TJ R/DR R][TJSR/DR R]
						[T R/DR R][TS R/DR R]
5	53666-82021		BAND	ﾊﾞﾝﾄﾞ	2	[TJ R/DR R][TJSR/DR R]
						[T R/DR R][TS R/DR R]
6	53666-82031		FLANGE,SIDE	ﾌﾗﾝｼﾞ	2	[TJ R/DR R][TJSR/DR R]
						[T R/DR R][TS R/DR R]
7	53666-82041		RING,LOCK	ﾘﾝｸﾞ	2	[TJ R/DR R][TJSR/DR R]
						[T R/DR R][TS R/DR R]

FIG.94 REAR WHEEL [TSUR][TUJR][TUSR][TUWR][TUGR]

(F7Z244K0) リヤーホイール

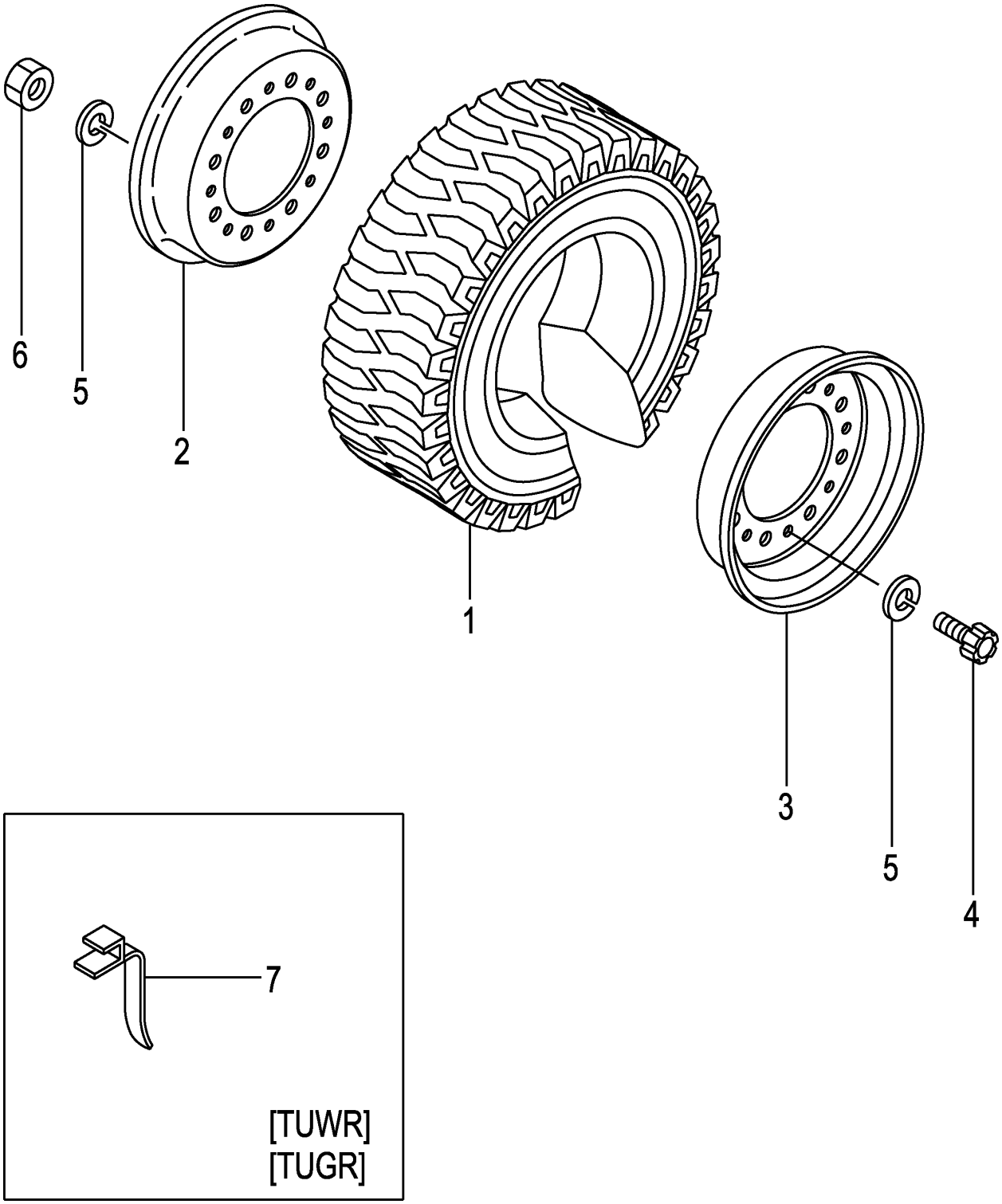

A:FD20C3Z FD20T3Z FD25C3Z FD25T3Z

Item No	Part No.	Mark	Description		Req'd	Remarks : Serial No.
A1	539A6-80301		WHEEL-ASSY,REAR	ﾘﾔｰﾎｲｰﾙｱｯｾﾝ	2	[TSUR] INC.1-6
-	53656-81301		WHEEL-ASSY,REAR	ﾘﾔｰﾎｲｰﾙｱｯｾﾝ	2	[TUJR] INC.1-6
-	53656-81301		WHEEL-ASSY,REAR	ﾘﾔｰﾎｲｰﾙｱｯｾﾝ	2	[TUJR] INC.1-6
-	53656-81301		WHEEL-ASSY,REAR	ﾘﾔｰﾎｲｰﾙｱｯｾﾝ	2	[TUJR/EX] INC.1-6
-	522A6-80521		WHEEL-ASSY,REAR	ﾘﾔｰﾎｲｰﾙｱｯｾﾝ	2	[TUSR] INC.1-6
-	522A6-80501		WHEEL-ASSY,REAR	ﾘﾔｰﾎｲｰﾙｱｯｾﾝ	2	[TUWR] INC.1-6
-	522A6-80511		WHEEL-ASSY,REAR	ﾘﾔｰﾎｲｰﾙｱｯｾﾝ	2	[TUGR] INC.1-6
1	06807-60009		TIRE,UNIQUE,600-9	ﾀｲﾔ	2	[TSUR]
-	06806-60009		TIRE,UNIQUE,600-9	ﾀｲﾔ	2	[TUJR]
-	06806-60009		TIRE,UNIQUE,600-9	ﾀｲﾔ	2	[TUJR]
-	06806-60009		TIRE,UNIQUE,600-9	ﾀｲﾔ	2	[TUJR/EX]
-	06851-60009		TIRE,SOFTONE,600-9	ﾀｲﾔ	2	[TUSR]
-	06841-60009		TIRE,WHITE,600-9	ﾀｲﾔ	2	[TUWR]
-	06843-60009		TIRE,GREEN,600-9	ﾀｲﾔ	2	[TUGR]
A2	23654-40501		RIM-ASSY,400E-9	ﾘﾑｱｯｾﾝ	2	[TSUR][TUJR][TUSR][TUWR] [TUGR] INC.2-6
2	NO PART NO.	#	RIM,INSIDE	ﾘﾑ	2	[TSUR][TUJR][TUSR][TUWR] [TUGR]
3	NO PART NO.	#	RIM,OUTSIDE	ﾘﾑ	2	[TSUR][TUJR][TUSR][TUWR] [TUGR]
4	534F3-82001		BOLT	ﾎﾞﾙﾄ	16	[TSUR][TUJR][TUSR][TUWR] [TUGR]
5	02011-00012		WASHER	ﾜｯｼｬ	32	[TSUR][TUJR][TUSR][TUWR] [TUGR]
6	01400-00012		NUT	ﾅｯﾄ	16	[TSUR][TUJR][TUSR][TUWR] [TUGR]
7	571A6-82081		BELT,EARTH	ﾍﾞﾙﾄ	1	[TUWR][TUGR]

FIG.95 REAR WHEEL [TUJR/DR R]

(F7Z244L0) リヤーホイール

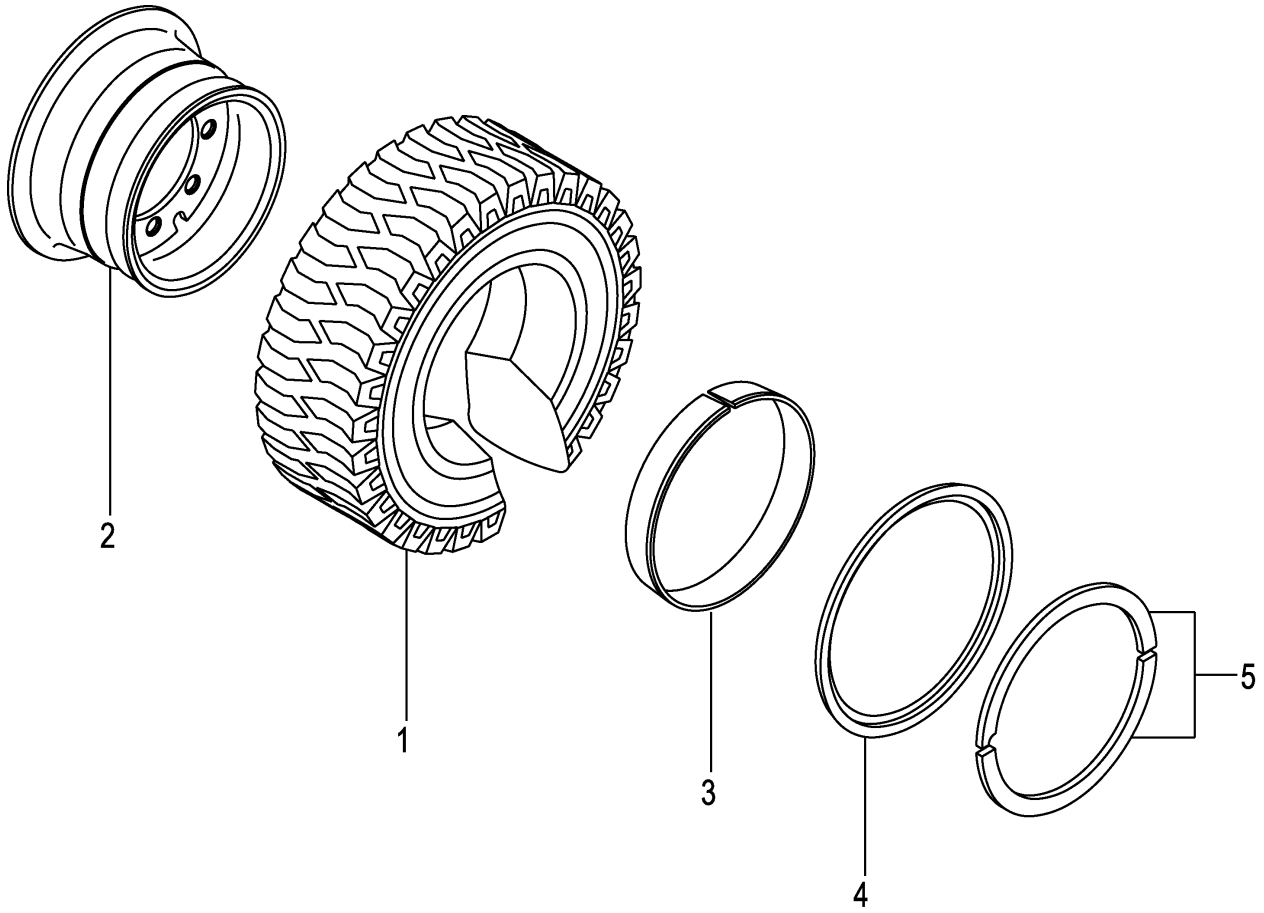

A:FD20C3Z FD20T3Z FD25C3Z FD25T3Z

Item No	Part No.	Mark	Description		Req'd	Remarks : Serial No.
A1	53666-81301		WHEEL-ASSY,REAR	ﾘﾔｰﾎｲｰﾙｱｯｾﾝ	2	[TUJR/DR R] INC.1-5
1	06806-60009		TIRE,UNIQUE,600-9	ﾀｲﾔ	2	[TUJR/DR R]
A2	53666-81901		RIM-ASSY,400E-9	ﾘﾑｱｯｾﾝ	2	[TUJR/DR R] INC.2-5
2	NO PART NO.	#	RIM	ﾘﾑ	2	[TUJR/DR R]
3	53666-82021		BAND	ﾊﾞﾝﾄﾞ	2	[TUJR/DR R]
4	53666-82031		FLANGE,SIDE	ﾌﾗﾝｼﾞ	2	[TUJR/DR R]
5	53666-82041		RING,LOCK	ﾘﾝｸﾞ	2	[TUJR/DR R]

FIG.96 REAR WHEEL [TRAR]

(F7Z244M0) リヤーホイール

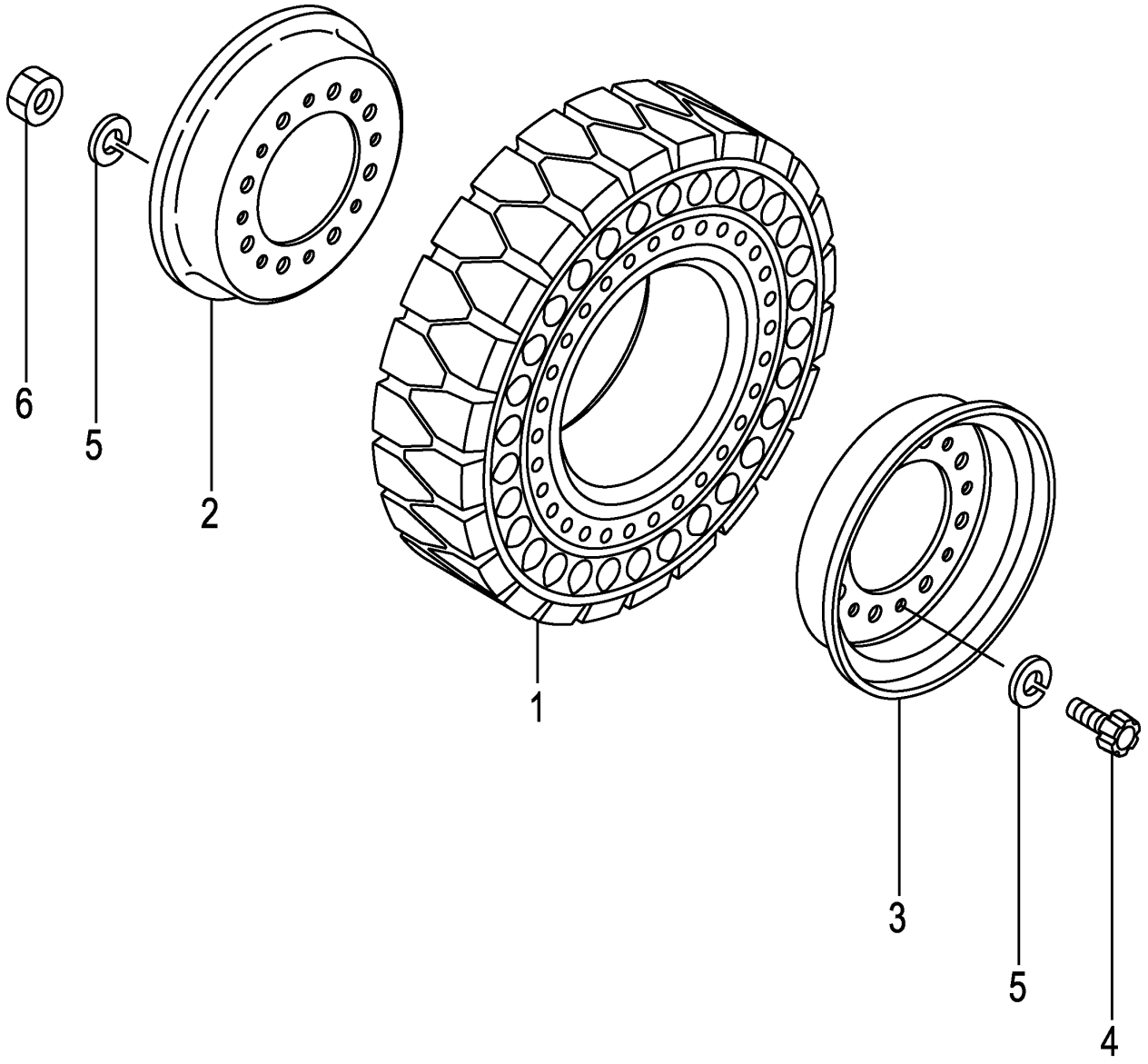

FIG.96

(F7Z244M0)

A:FD20C3Z FD20T3Z FD25C3Z FD25T3Z

Item No	Part No.	Mark	Description		Req'd	Remarks : Serial No.
A1	534A6-80271		WHEEL-ASSY,REAR	ﾘﾔｰﾎｲｰﾙｱｯｾﾝ	2	[TRAR] INC.1-6
1	534A6-85001		TIRE,AIR-BOSS,600-9	ﾀｲﾔ	2	[TRAR]
A2	23654-40501		RIM-ASSY,400E-9	ﾘﾑｱｯｾﾝ	2	[TRAR] INC.2-6
2	NO PART NO.	#	RIM,INSIDE	ﾘﾑ	2	[TRAR]
3	NO PART NO.	#	RIM,OUTSIDE	ﾘﾑ	2	[TRAR]
4	534F3-82001		BOLT	ﾎﾞﾙﾄ	16	[TRAR]
5	02011-00012		WASHER	ﾜｯｼｬ	32	[TRAR]
6	01400-00012		NUT	ﾅｯﾄ	16	[TRAR]

FIG.97 POWER CYLINDER

(F7Z24510) ﾊﾟﾜｰｼﾘﾝﾀﾞ

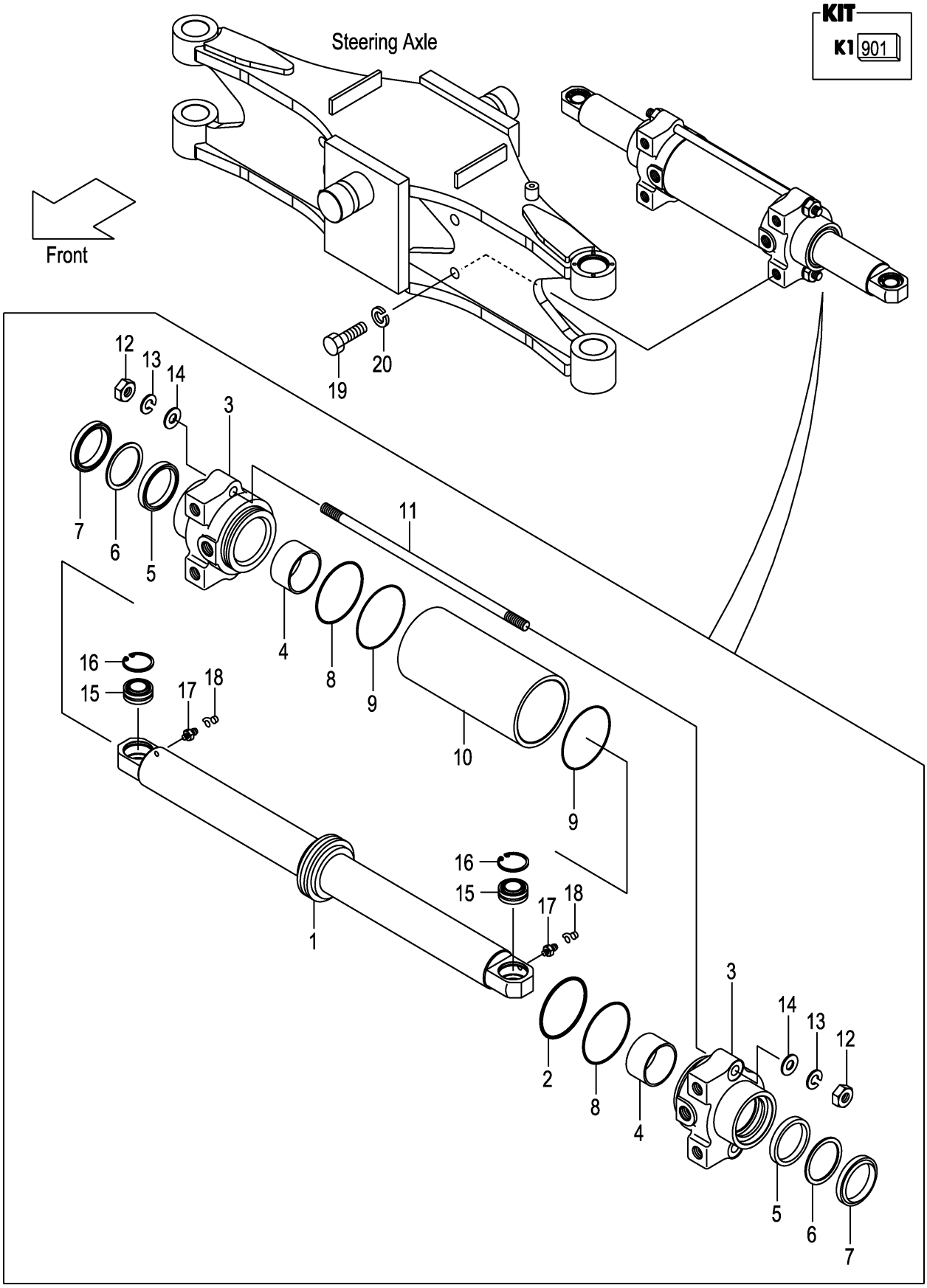

A:FD20C3Z FD20T3Z FD25C3Z FD25T3Z:1-275

Item No	Part No.	Mark	Description		Req'd	Remarks : Serial No.
A1	22N54-50201		CYL-ASSY,PS	ﾊﾟﾜｽﾃｼﾘﾝﾀﾞｱｯｾﾝ	1	INC.1-18
901	22N54-59801	K1	KIT,OVERHAUL	ｵｰﾊﾞﾎｰﾙｷｯﾄ	1	INC.2,5-9
A2	22N54-50221		ROD-ASSY,PISTON	ﾋﾟｽﾄﾝﾛｯﾄﾞｱｯｾﾝ	1	INC.1,2
1	22N54-52001		ROD,PISTON	ﾛｯﾄﾞ	1	
2	514A2-42201	*	SEAL	ｼｰﾙ	1	
3	22N54-52101		CAP,CYL	ｷｬｯﾌﾟ	2	
4	23460-53171		BUSHING,DU	ﾌﾞｯｼﾝｸﾞ	2	
5	97103-35431	*	PACKING	ﾊﾟｯｷﾝｸﾞ	2	
6	22658-52301	*	RING,BACK-UP	ﾘﾝｸﾞ	2	
7	22N54-52141	*	SEAL,DUST	ｼｰﾙ	2	
8	03350-00750	*	O-RING	Oﾘﾝｸﾞ	2	
9	22N54-52151	*	O-RING	Oﾘﾝｸﾞ	2	1-115
10	22N54-52201		BODY,CYL	ﾎﾞﾃﾞｨ	1	
11	22N54-52251		BOLT	ﾎﾞﾙﾄ	2	
12	01400-00012		NUT	ﾅｯﾄ	4	
13	02010-00012		WASHER	ﾜｯｼｬ	4	
14	02000-00012		WASHER	ﾜｯｼｬ	4	
15	215E4-52231		JOINT,SPHERE-FACE	ｼﾞｮｲﾝﾄ	2	
16	02110-00035		RING,SNAP	ﾘﾝｸﾞ	2	
17	214A8-52051		NIPPLE,GREASE	ﾆｯﾌﾟﾙ	2	
18	22199-12401		CAP,NIPPLE	ｷｬｯﾌﾟ	2	
19	01100-16040		BOLT	ﾎﾞﾙﾄ	4	
20	02010-00016		WASHER	ﾜｯｼｬ	4	

FIG.97A POWER CYLINDER

(F7Z24511) ﾊﾟﾜｰｼﾘﾝﾀﾞ

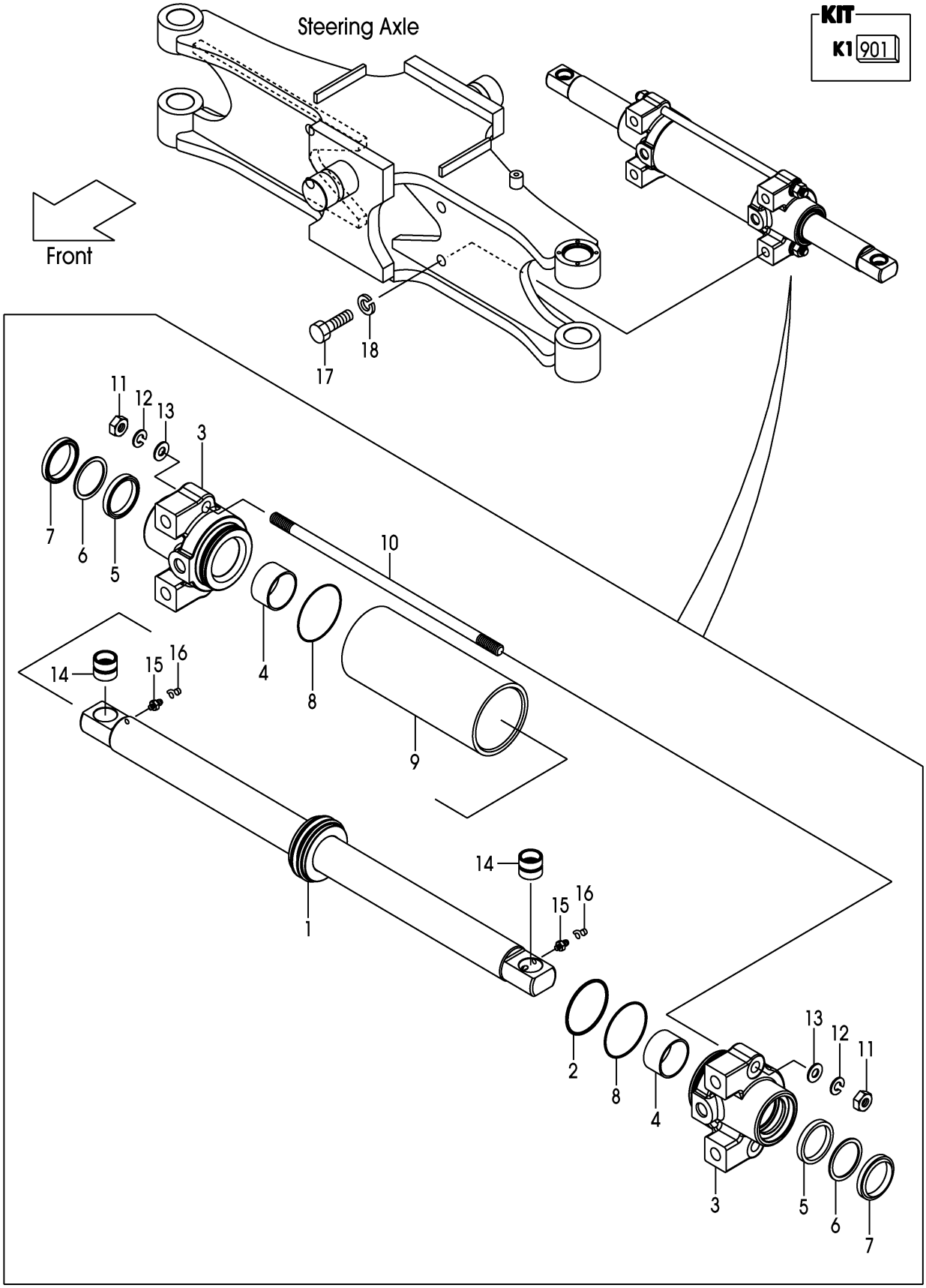

A:FD20C3Z FD20T3Z FD25C3Z FD25T3Z:276-

Item No	Part No.	Mark	Description		Req'd	Remarks : Serial No.
A1	22B54-50201		CYL-ASSY,PS	ﾊﾟﾜｽﾃｼﾘﾝﾀﾞｱｯｾﾝ	1	INC.1-16
901	20A74-59801	K1	KIT,OVERHAUL	ｵｰﾊﾞﾎｰﾙｷｯﾄ	1	INC.2,5-9
A2	533A2-40211		ROD-ASSY,PISTON	ﾋﾟｽﾄﾝﾛｯﾄﾞｱｯｾﾝ	1	INC.1,2
1	533A2-42001		ROD,PISTON	ﾛｯﾄﾞ	1	
2	25784-52342	*	SEAL	ｼｰﾙ	1	
3	20A74-52101		CAP,CYL	ｷｬｯﾌﾟ	2	
4	22198-42611		BUSHING,DU	ﾌﾞｯｼﾝｸﾞ	2	
5	20A74-52161	*	PACKING	ﾊﾟｯｷﾝｸﾞ	2	
6	23650-83531	*	RING,BACK-UP	ﾘﾝｸﾞ	2	
7	24320-56871	*	SEAL,DUST	ｼｰﾙ	2	
8	214A8-52221	*	O-RING	Oﾘﾝｸﾞ	2	
9	22B54-52201		BODY,CYL	ﾎﾞﾃﾞｨ	1	
10	22N54-52251		BOLT	ﾎﾞﾙﾄ	2	
11	01400-00012		NUT	ﾅｯﾄ	4	
12	02010-00012		WASHER	ﾜｯｼｬ	4	
13	02000-00012		WASHER	ﾜｯｼｬ	4	
14	22B54-52001		BUSHING	ﾌﾞｯｼﾝｸﾞ	2	
15	214A8-52051		NIPPLE,GREASE	ﾆｯﾌﾟﾙ	2	
16	22199-12401		CAP,NIPPLE	ｷｬｯﾌﾟ	2	
17	01100-16040		BOLT	ﾎﾞﾙﾄ	4	
18	02010-00016		WASHER	ﾜｯｼｬ	4	

FIG.98 POWER CYLINDER BOOT [PSB]

(F7Z24520) ﾊﾟﾜｰｼﾘﾝﾀﾞﾌﾞｰﾂ

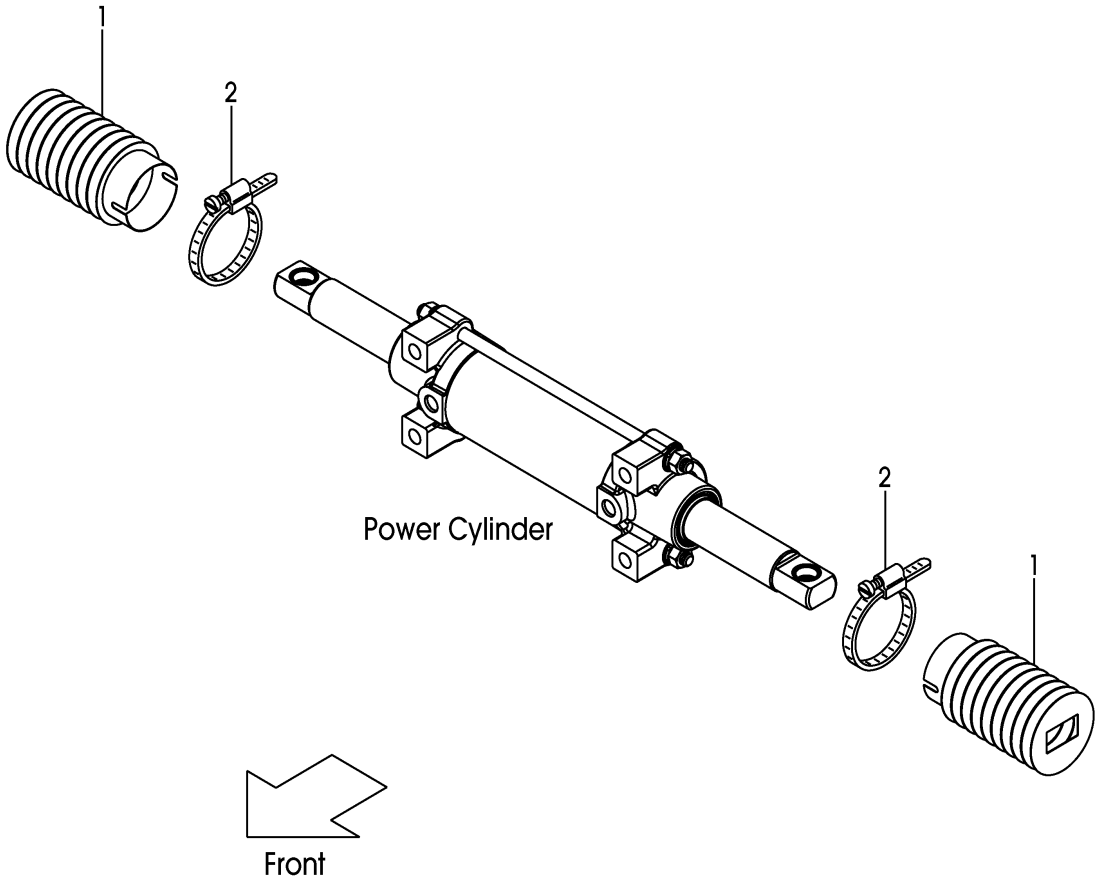

FIG.98

(F7Z24520)

A:FD20C3Z FD20T3Z FD25C3Z FD25T3Z

Item No	Part No.	Mark	Description	Req'd	Remarks : Serial No.
1	22B54-52301		BOOT,PS-CYL ﾌﾞｰﾂ	2	[PSB]
2	216G8-53031		BAND ﾊﾞﾝﾄﾞ	2	[PSB]

FIG.99 OVERHEAD GUARD

(F7Z25110) オーバ゛ヘッド゛カ゛ード゛

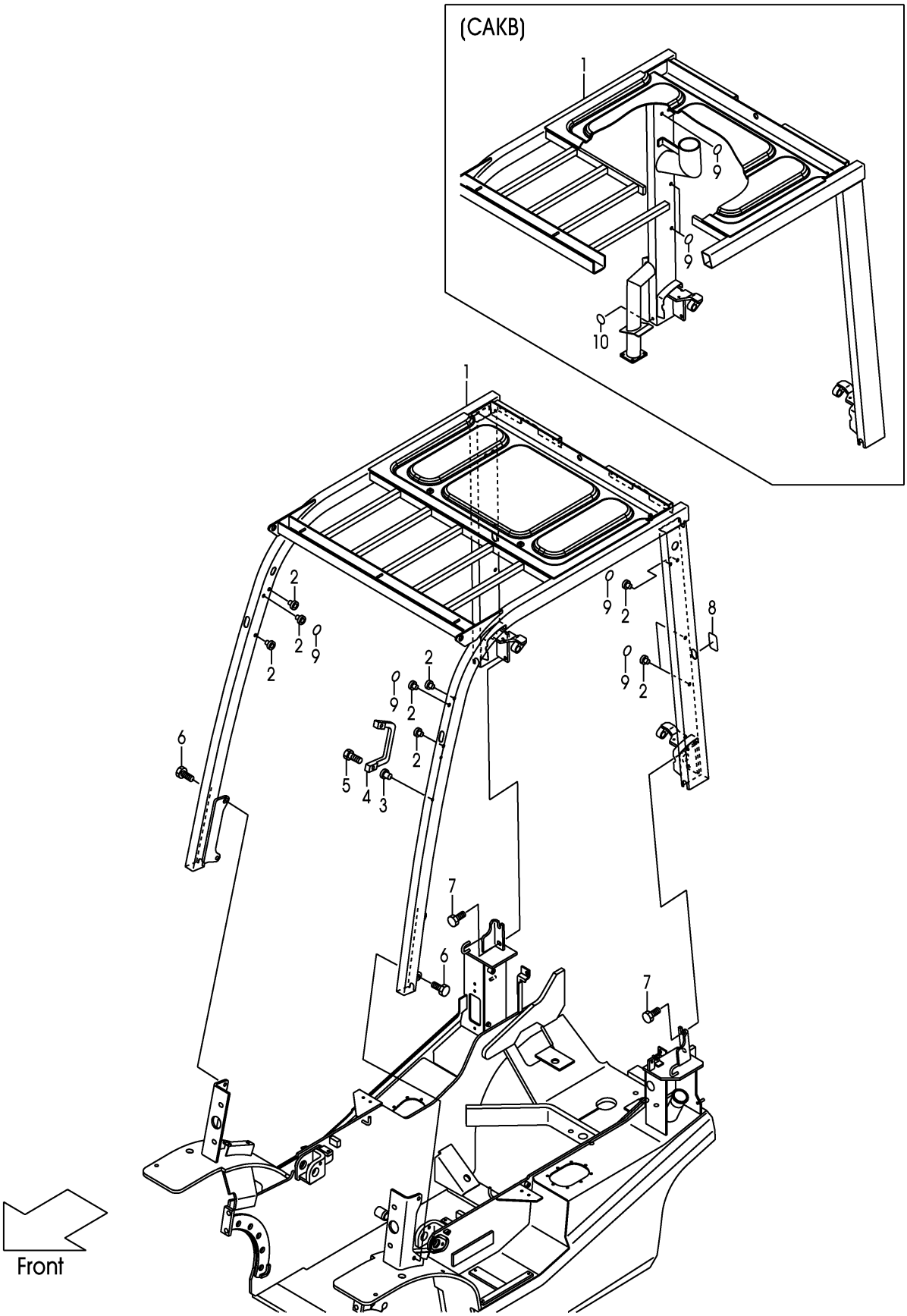

FIG.99

(F7Z25110)

A:FD20C3Z FD20T3Z FD25C3Z FD25T3Z:1-175

Item No	Part No.	Mark	Description		Req'd	Remarks : Serial No.
1	22N55-10161		GUARD,HEAD	ｶﾞｰﾄﾞ	1	
-	52N55-00101		GUARD,HEAD	ｶﾞｰﾄﾞ	1	[HGH060]
-	52N55-00111		GUARD,HEAD	ｶﾞｰﾄﾞ	1	[HGH100]
-	52N55-00121		GUARD,HEAD	ｶﾞｰﾄﾞ	1	[HGH150]
-	52N55-00131		GUARD,HEAD	ｶﾞｰﾄﾞ	1	[HGH200]
-	52N55-00141		GUARD,HEAD	ｶﾞｰﾄﾞ	1	[HGL]
-	52N50-90101		GUARD,HEAD	ｶﾞｰﾄﾞ	1	[CAKB]
-	52N50-90401		GUARD,HEAD	ｶﾞｰﾄﾞ	1	[HGH060/CAKB]
2	514A5-12011		RIVET,POP	ﾘﾍﾞｯﾄ	14	
-	514A5-12011		RIVET,POP	ﾘﾍﾞｯﾄ	10	[CAKB]
3	516G5-13151		RIVET,POP	ﾘﾍﾞｯﾄ	2	
4	516G5-13051		GRIP	ｸﾞﾘｯﾌﾟ	1	
5	01171-06025		BOLT	ﾎﾞﾙﾄ	2	
6	01186-12040		BOLT	ﾎﾞﾙﾄ	4	
7	01186-12025		BOLT	ﾎﾞﾙﾄ	4	
8	22N55-13191		SEAT,HG	ｼｰﾄ	2	
9	22N55-13181		SEAL,PANEL-COVER	ｼｰﾙ	10	
10	22N55-13181		SEAL,PANEL-COVER	ｼｰﾙ	1	[CAKB]

FIG.99A OVERHEAD GUARD

(F7Z25111) オーバヘッドガード

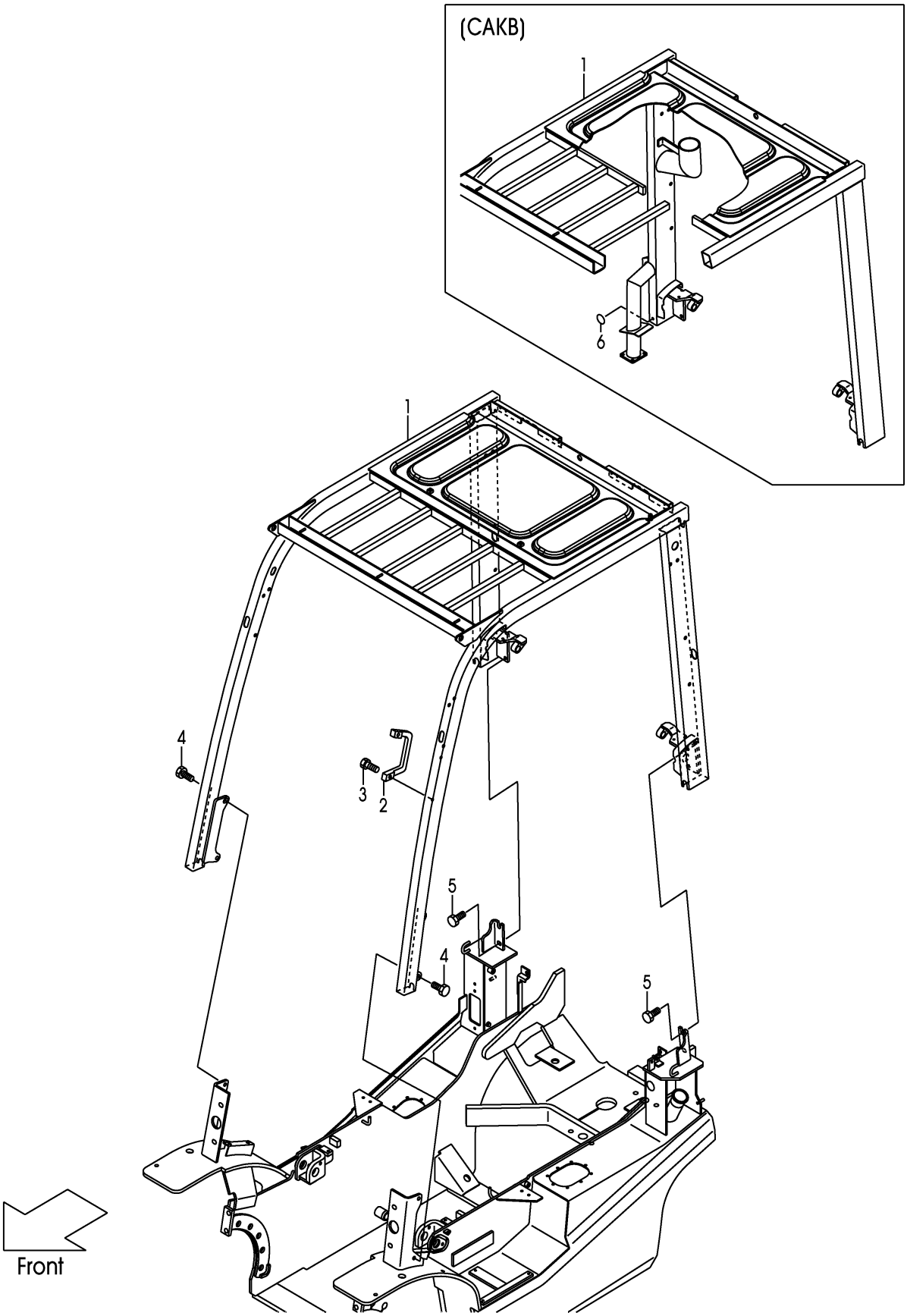

A:FD20C3Z FD20T3Z FD25C3Z FD25T3Z:176-

Item No	Part No.	Mark	Description		Req'd	Remarks : Serial No.
1	22N55-10161		GUARD,HEAD	ｶﾞｰﾄﾞ	1	
-	52N55-00101		GUARD,HEAD	ｶﾞｰﾄﾞ	1	[HGH060]
-	52N55-00111		GUARD,HEAD	ｶﾞｰﾄﾞ	1	[HGH100]
-	52N55-00121		GUARD,HEAD	ｶﾞｰﾄﾞ	1	[HGH150]
-	52N55-00131		GUARD,HEAD	ｶﾞｰﾄﾞ	1	[HGH200]
-	52N55-00141		GUARD,HEAD	ｶﾞｰﾄﾞ	1	[HGL]
-	52N50-90101		GUARD,HEAD	ｶﾞｰﾄﾞ	1	[CAKB]
-	52N50-90401		GUARD,HEAD	ｶﾞｰﾄﾞ	1	[HGH060/CAKB]
2	516G5-13051		GRIP	ｸﾞﾘｯﾌﾟ	1	
3	01171-06025		BOLT	ﾎﾞﾙﾄ	2	
4	01186-12040		BOLT	ﾎﾞﾙﾄ	4	
5	01186-12025		BOLT	ﾎﾞﾙﾄ	4	
6	22N55-13181		SEAL,PANEL-COVER	ｼｰﾙ	1	[CAKB]

FIG.100 OVERHEAD GUARD [HGD]

(F7Z25120) オーバ゛ヘッド゛カ゛ード゛

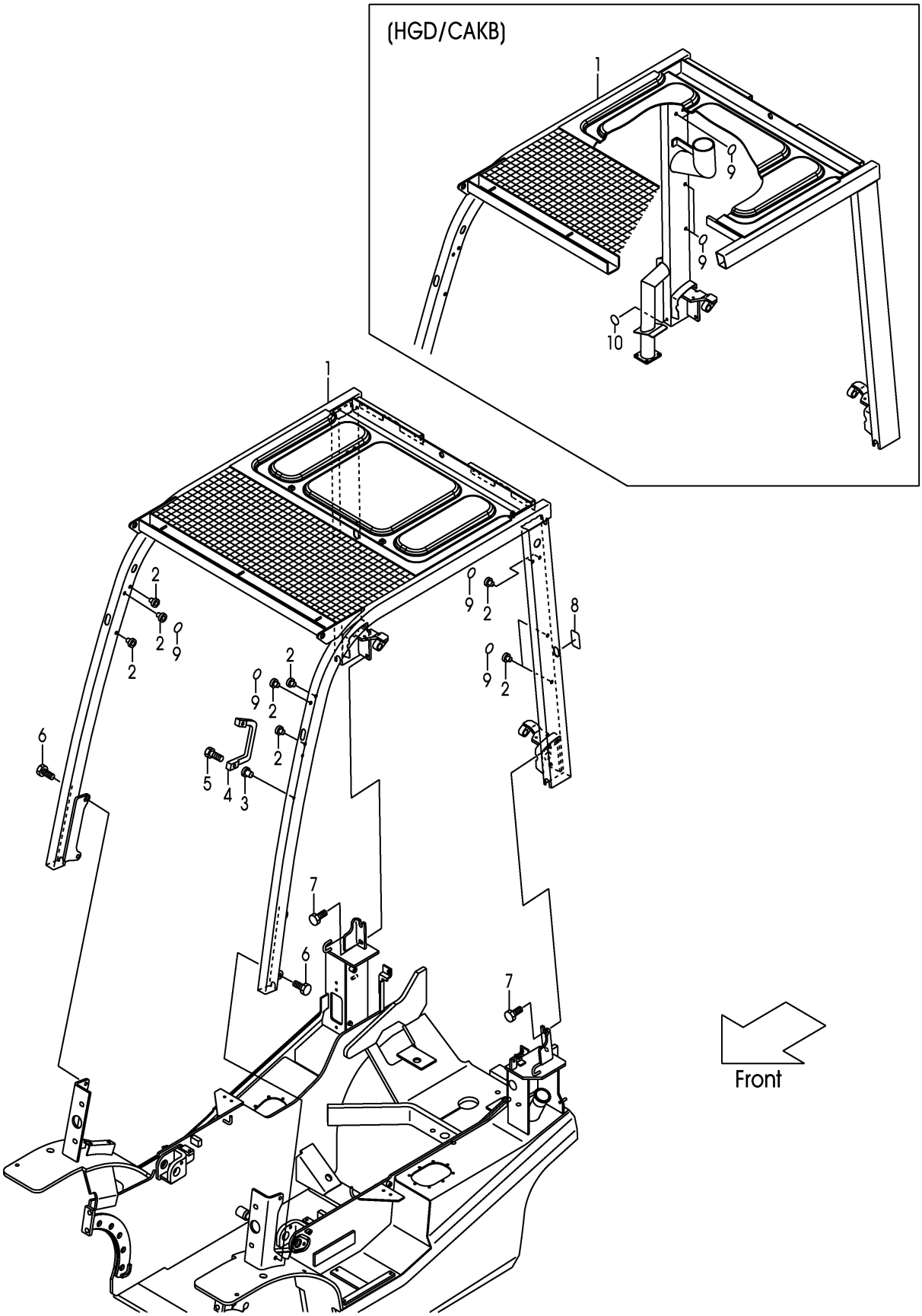

A:FD20C3Z FD20T3Z FD25C3Z FD25T3Z:1-175

Item No	Part No.	Mark	Description		Req'd	Remarks : Serial No.
1	52N52-90201		GUARD,HEAD	ｶﾞｰﾄﾞ	1	[HGD]
-	52N52-90221		GUARD,HEAD	ｶﾞｰﾄﾞ	1	[HGD/HGH060]
-	52N52-90211		GUARD,HEAD	ｶﾞｰﾄﾞ	1	[HGD/CAKB]
-	52N52-90231		GUARD,HEAD	ｶﾞｰﾄﾞ	1	[HGD/HGH060/CAKB]
2	514A5-12011		RIVET,POP	ﾘﾍﾞｯﾄ	14	[HGD]
-	514A5-12011		RIVET,POP	ﾘﾍﾞｯﾄ	10	[HGD/CAKB]
3	516G5-13151		RIVET,POP	ﾘﾍﾞｯﾄ	2	[HGD]
4	516G5-13051		GRIP	ｸﾞﾘｯﾌﾟ	1	[HGD]
5	01171-06025		BOLT	ﾎﾞﾙﾄ	2	[HGD]
6	01186-12040		BOLT	ﾎﾞﾙﾄ	4	[HGD]
7	01186-12025		BOLT	ﾎﾞﾙﾄ	4	[HGD]
8	22N55-13191		SEAT,HG	ｼｰﾄ	2	[HGD]
9	22N55-13181		SEAL,PANEL-COVER	ｼｰﾙ	10	[HGD]
10	22N55-13181		SEAL,PANEL-COVER	ｼｰﾙ	1	[HGD/CAKB]

FIG.100A OVERHEAD GUARD [HGD]

(F7Z25121) オーバ゛ヘッド゛カ゛ード゛

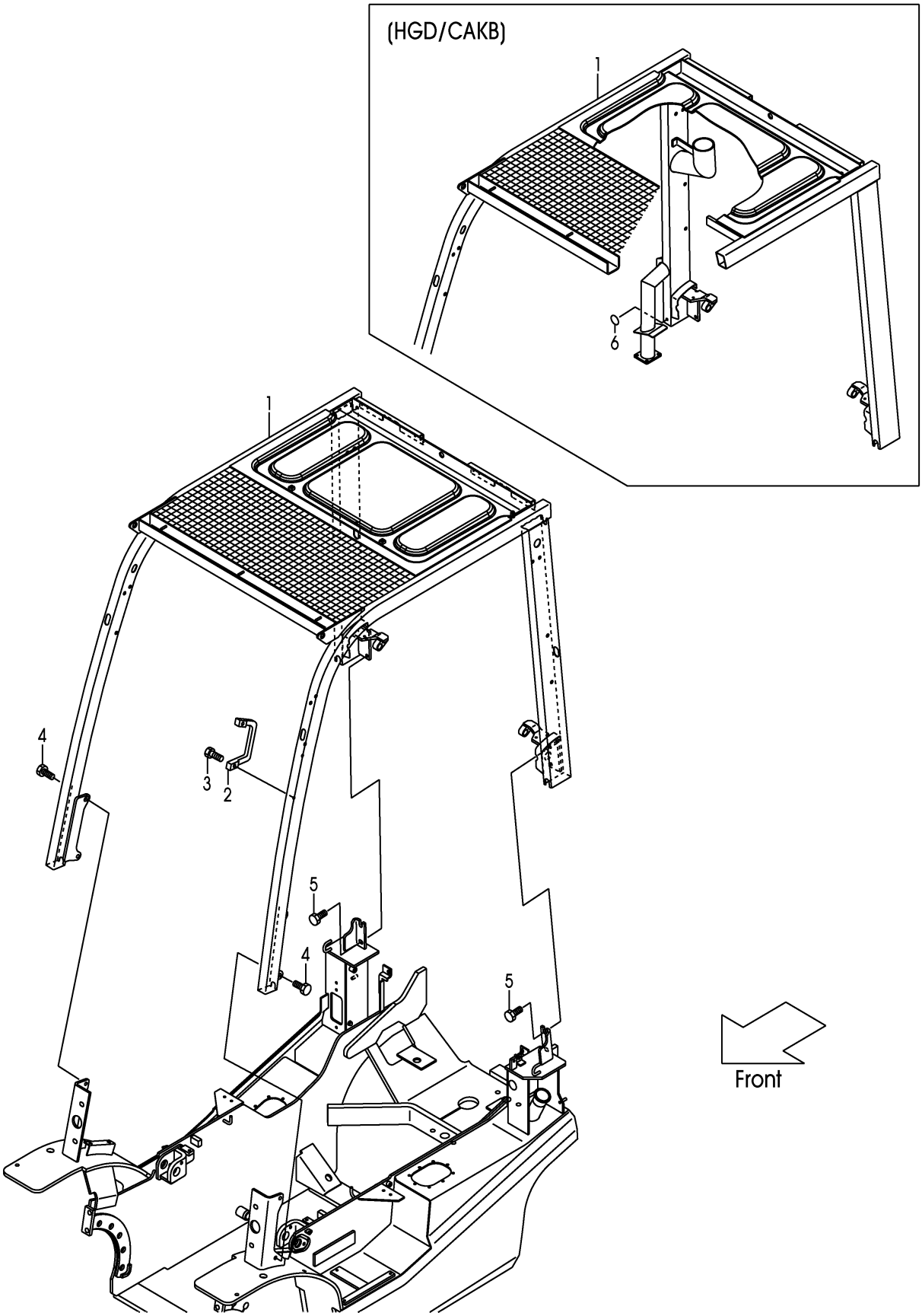

A:FD20C3Z FD20T3Z FD25C3Z FD25T3Z:176-

Item No	Part No.	Mark	Description		Req'd	Remarks : Serial No.
1	52N52-90201		GUARD,HEAD	ｶﾞｰﾄﾞ	1	[HGD]
-	52N52-90221		GUARD,HEAD	ｶﾞｰﾄﾞ	1	[HGD/HGH060]
-	52N52-90211		GUARD,HEAD	ｶﾞｰﾄﾞ	1	[HGD/CAKB]
-	52N52-90231		GUARD,HEAD	ｶﾞｰﾄﾞ	1	[HGD/HGH060/CAKB]
2	516G5-13051		GRIP	ｸﾞﾘｯﾌﾟ	1	[HGD]
3	01171-06025		BOLT	ﾎﾞﾙﾄ	2	[HGD]
4	01186-12040		BOLT	ﾎﾞﾙﾄ	4	[HGD]
5	01186-12025		BOLT	ﾎﾞﾙﾄ	4	[HGD]
6	22N55-13181		SEAL,PANEL-COVER	ｼｰﾙ	1	[HGD/CAKB]

FIG.101 FRONT LAMP BRACKET

(F7Z25130) フロントランプブラケット

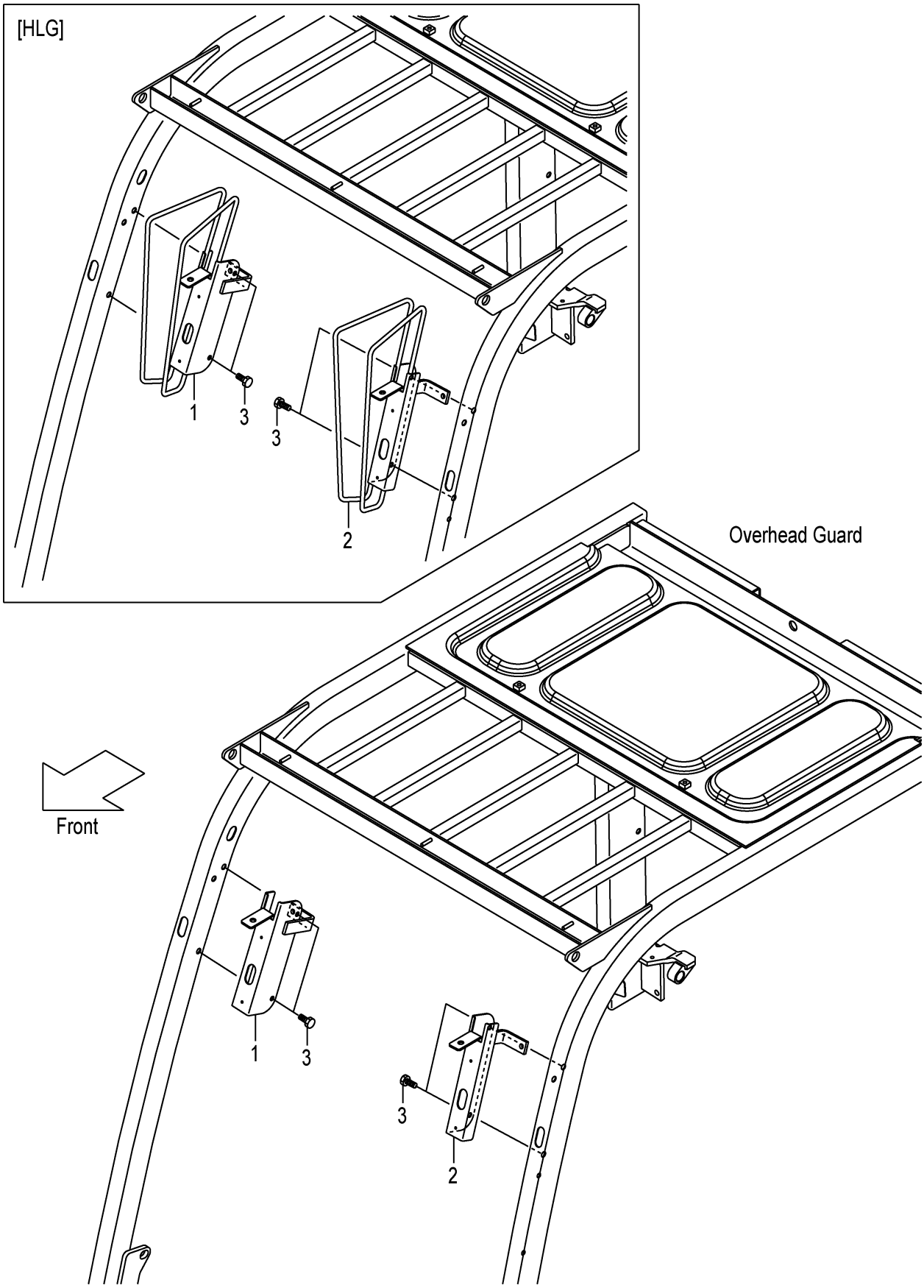

FIG.101

(F7Z25130)

A:FD20C3Z FD20T3Z FD25C3Z FD25T3Z

Item No	Part No.	Mark	Description	Req'd	Remarks : Serial No.
1	22N55-12271		BRACKET,HEAD-LAMP,RH ﾌﾞﾗｹｯﾄ	1	(WITHOUT AW071)
-	52N55-12101		BRACKET,HEAD-LAMP,RH ﾌﾞﾗｹｯﾄ	1	[HLG]
2	22N55-12281		BRACKET,HEAD-LAMP,LH ﾌﾞﾗｹｯﾄ	1	(WITHOUT AW071)
-	52N55-12111		BRACKET,HEAD-LAMP,LH ﾌﾞﾗｹｯﾄ	1	[HLG]
3	514A5-12021		BOLT ﾎﾞﾙﾄ	4	(WITHOUT AW071)

FIG.102 FRONT LAMP BRACKET [HL][BKH]

(F7Z25140) フロントランプブラケット

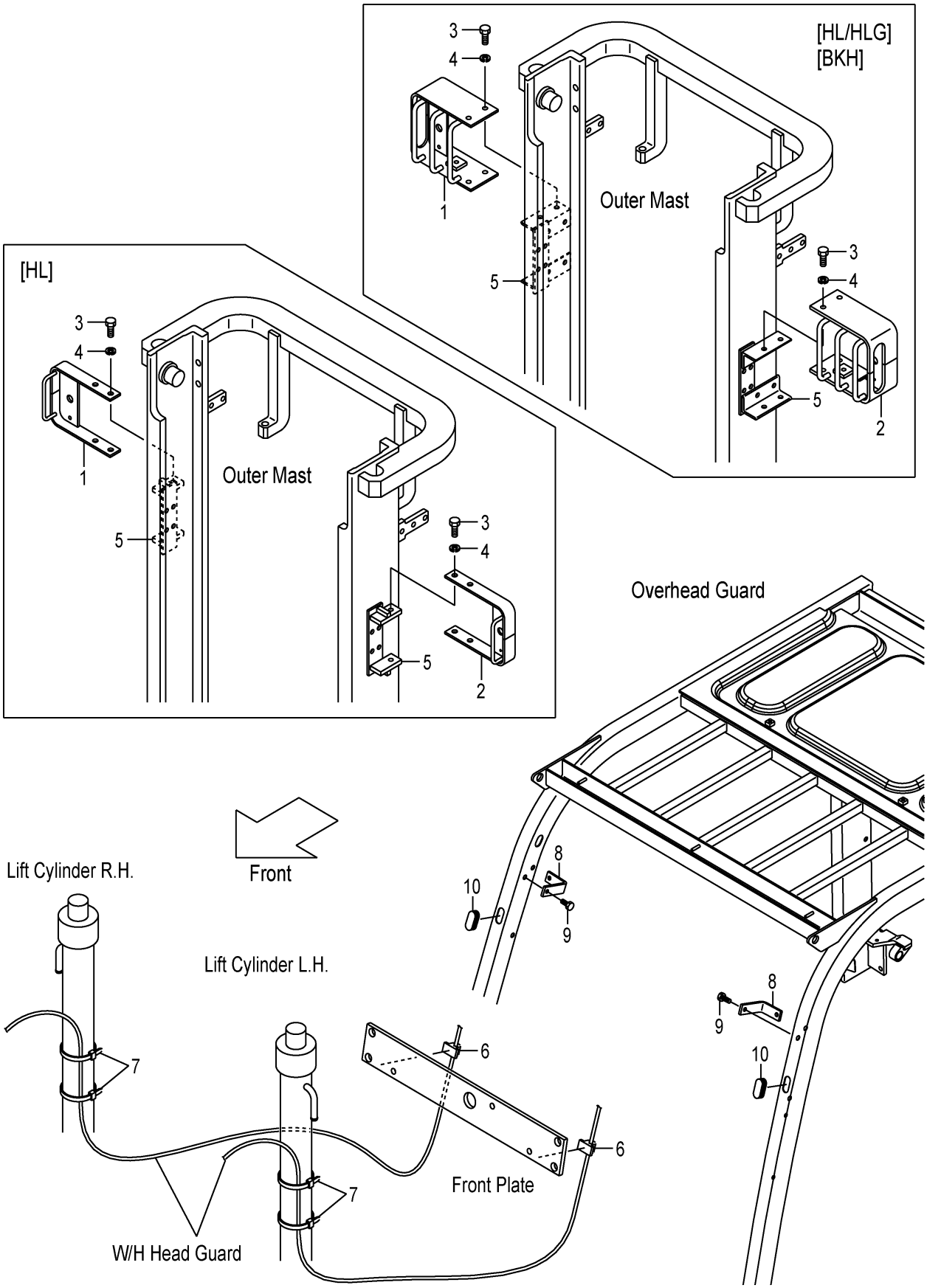

A:FD20C3Z FD20T3Z FD25C3Z FD25T3Z

Item No	Part No.	Mark	Description	Req'd	Remarks : Serial No.
1	534A9-22001		BRACKET,HEAD-LAMP,RH ﾌﾞﾗｹｯﾄ	1	[HL]
-	534A4-22001		BRACKET,HEAD-LAMP,RH ﾌﾞﾗｹｯﾄ	1	[HL/HLG][BKH]
2	534A9-22011		BRACKET,HEAD-LAMP,LH ﾌﾞﾗｹｯﾄ	1	[HL]
-	534A4-22011		BRACKET,HEAD-LAMP,LH ﾌﾞﾗｹｯﾄ	1	[HL/HLG][BKH]
3	01100-12020		BOLT ﾎﾞﾙﾄ	4	[HL][HL/HLG][BKH]
4	02010-00012		WASHER ﾜｯｼｬ	4	[HL][HL/HLG][BKH]
5	641B0-12701		BRACKET,HL ﾌﾞﾗｹｯﾄ	2	[HL]
-	641B0-12751		BRACKET,BKH ﾌﾞﾗｹｯﾄ	2	[HL/HLG][BKH]
6	27732-42221		CLAMP,HARNESS ｸﾗﾝﾌﾟ	2	[HL][HL/HLG][BKH]
7	04913-11380		BAND,INSHULOCK ﾊﾞﾝﾄﾞ	4	[HL][HL/HLG][BKH]
8	22N55-12571		BRACKET,BACK-MIRROR ﾌﾞﾗｹｯﾄ	2	[HL][HL/HLG][BKH]
9	514A5-12021		BOLT ﾎﾞﾙﾄ	2	[HL][HL/HLG][BKH]
10	27662-63711		GROMMET ｸﾞﾛﾒｯﾄ	2	[HL][HL/HLG][BKH]

FIG.103 REAR LAMP COVER

(F7Z25150) ﾘﾔｰﾗﾝﾌﾟｶﾊﾞｰ

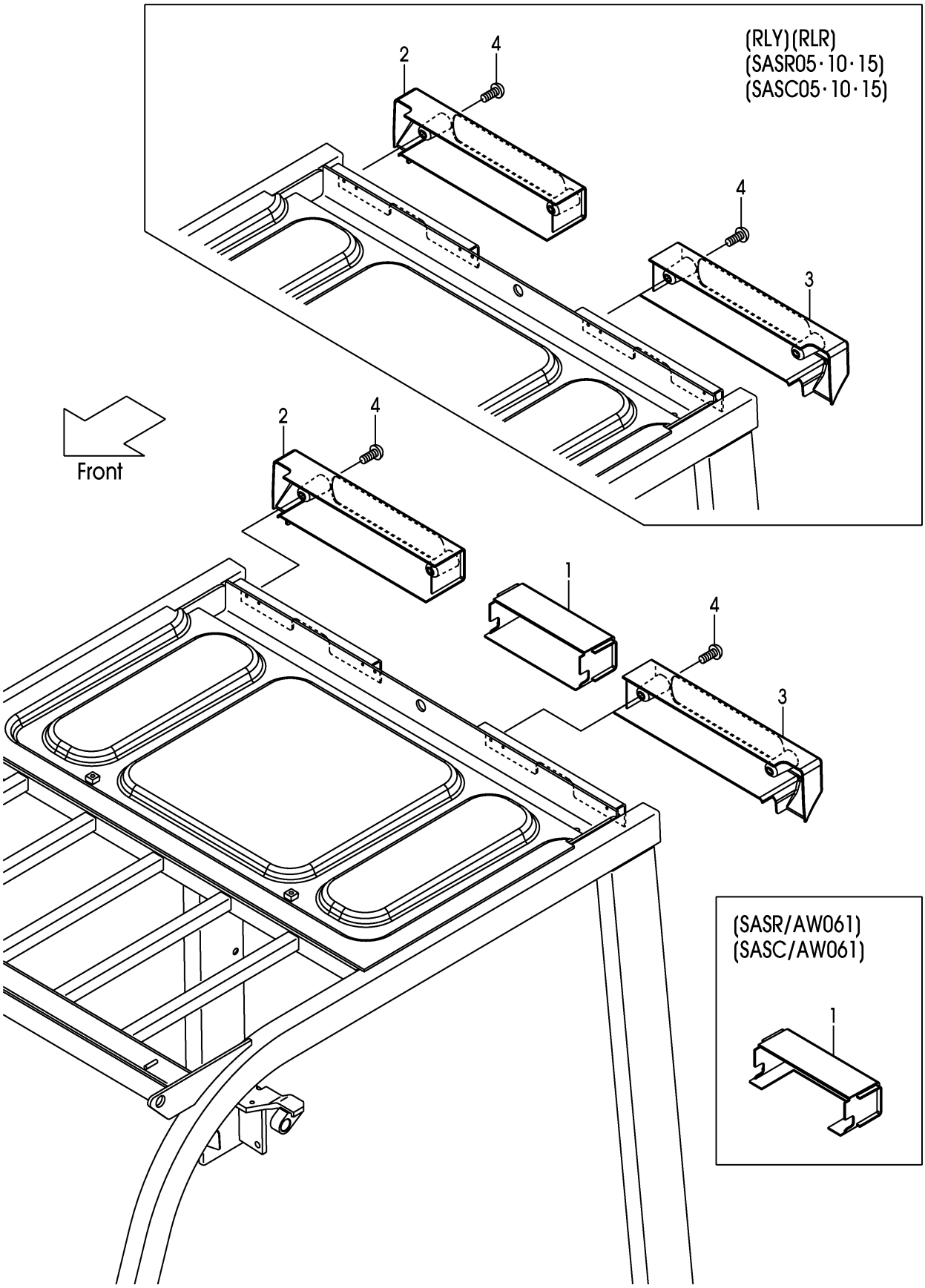

FIG.103

(F7Z25150)

A:FD20C3Z FD20T3Z FD25C3Z FD25T3Z

Item No	Part No.	Mark	Description	Req'd	Remarks : Serial No.
1	22N55-12701		COVER,REAR-LAMP ｶﾊﾞｰ	1	(WITHOUT RLY,RLR,SASR,SASC)
-	52N55-00511		COVER,REAR-LAMP ｶﾊﾞｰ	1	1-143 [HGH060][HGH100]
-	22N55-12701		COVER,REAR-LAMP ｶﾊﾞｰ	1	144- [HGH060][HGH100]
-	52N55-00521		COVER,REAR-LAMP ｶﾊﾞｰ	1	1-143 [HGH150][HGH200]
-	22N55-12701		COVER,REAR-LAMP ｶﾊﾞｰ	1	144- [HGH060][HGH100]
-	50A78-92001		COVER,REAR-LAMP ｶﾊﾞｰ	1	[SASR/AW061][SASC/AW061]
2	22N55-12711		COVER,REAR-LAMP,RH ｶﾊﾞｰ	1	
3	22N55-12721		COVER,REAR-LAMP,LH ｶﾊﾞｰ	1	
4	214A6-42252		SCREW ｽｸﾘｭ	4	

FIG.104 HEAD GUARD PARTS

(F7Z251A0) ﾍｯﾄﾞｶﾞｰﾄﾞﾊﾟｰﾂ

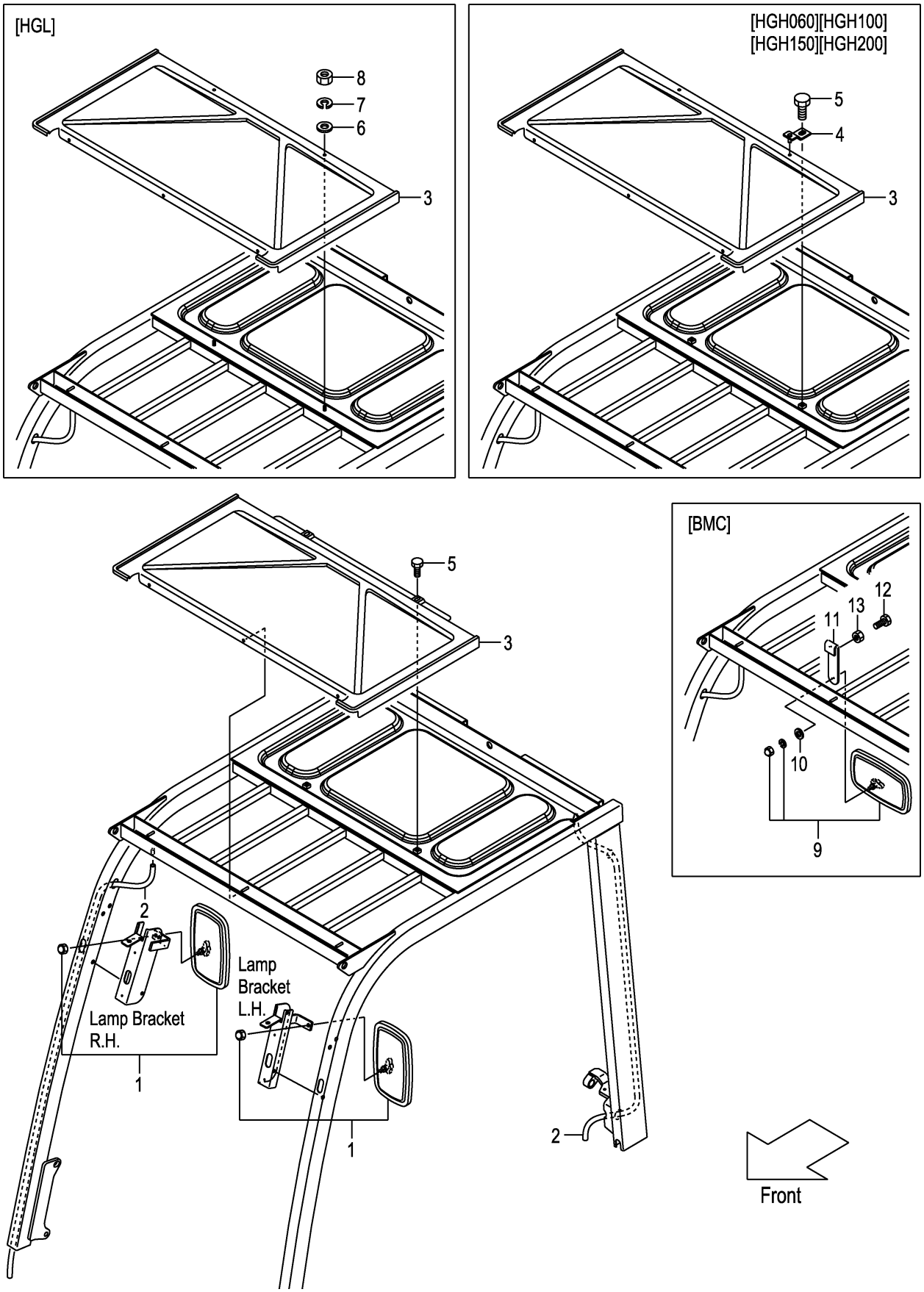

A:FD20C3Z FD20T3Z FD25C3Z FD25T3Z

Item No	Part No.	Mark	Description		Req'd	Remarks : Serial No.
1	239A9-92001		MIRROR	ﾐﾗｰ	2	
2	534A5-00401		HOSE,VINYL	ﾎｰｽ	2	
-	534A5-00411		HOSE,VINYL	ﾎｰｽ	2	[HGH060][HGH100]
-	577H5-13051		HOSE,VINYL	ﾎｰｽ	2	[HGH150][HGH200]
-	516M5-12301		HOSE,VINYL	ﾎｰｽ	2	[HGL]
3	22N55-12901		CANVAS	ｷｬﾝﾊﾞｽ	1	
-	52N55-00501		CANVAS	ｷｬﾝﾊﾞｽ	1	[HGH060][HGH100][HGH150] [HGH200][HGL]
4	52N55-00551		BRACKET	ﾌﾞﾗｹｯﾄ	2	[HGH060][HGH100][HGH150] [HGH200]
5	01185-08016		BOLT	ﾎﾞﾙﾄ	2	(WITHOUT HGL)
6	02000-00006		WASHER	ﾜｯｼｬ	2	[HGL]
7	02010-00006		WASHER	ﾜｯｼｬ	2	[HGL]
8	01400-00006		NUT	ﾅｯﾄ	2	[HGL]
9	239A9-92001		MIRROR	ﾐﾗｰ	1	[BMC]
10	222A9-32011		WASHER	ﾜｯｼｬ	1	[BMC]
11	539A9-32001		BRACKET,BACK-MIRROR	ﾌﾞﾗｹｯﾄ	1	[BMC]
12	01100-08025		BOLT	ﾎﾞﾙﾄ	2	[BMC]
13	01402-00008		NUT	ﾅｯﾄ	2	[BMC]

FIG.105 POP RIVET

(F7Z251B0) ﾎﾟｯﾌﾟﾘﾍﾞｯﾄ

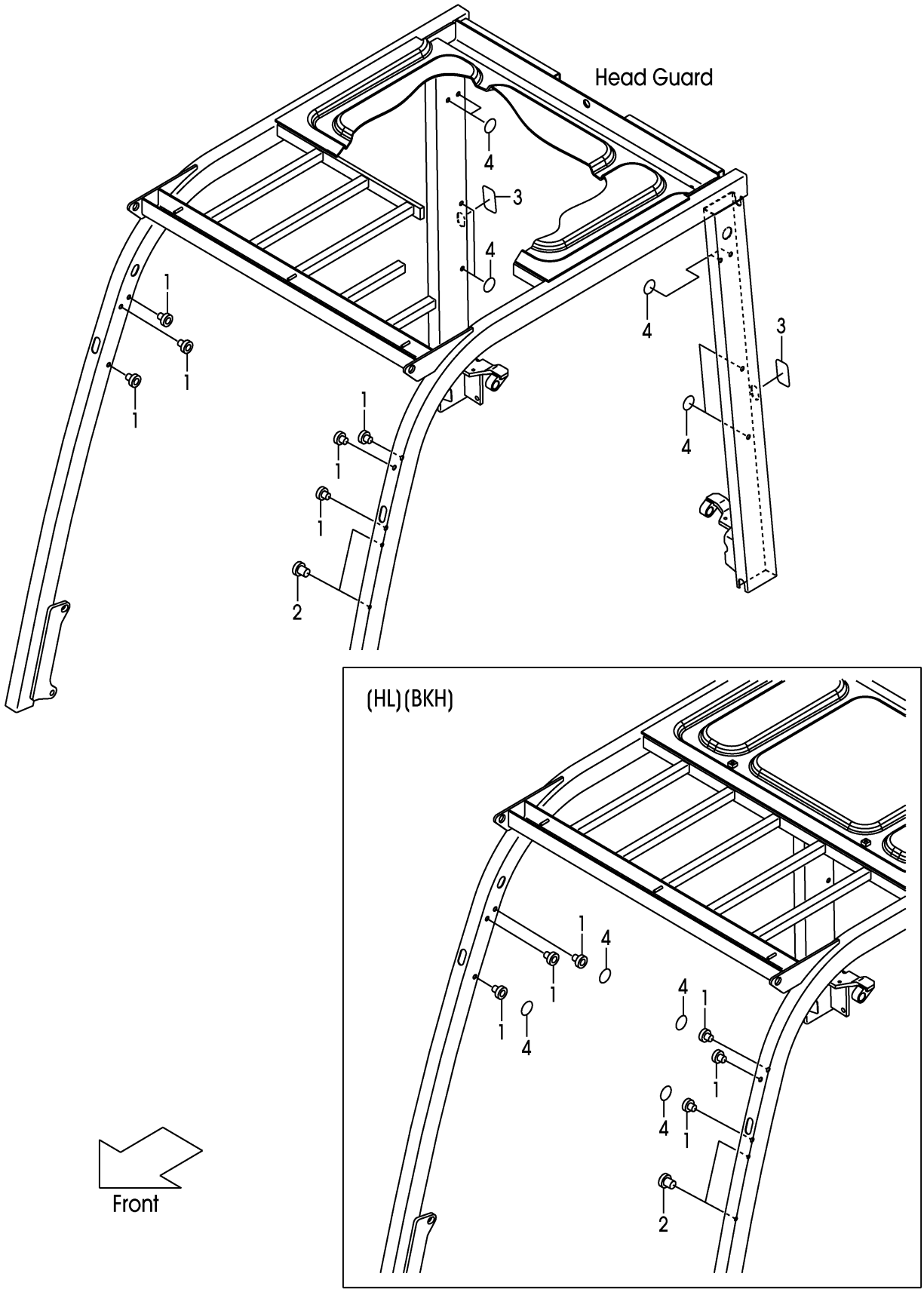

A:FD20C3Z FD20T3Z FD25C3Z FD25T3Z:176-

Item No	Part No.	Mark	Description		Req'd	Remarks : Serial No.
1	514A5-12011		RIVET,POP	ﾘﾍﾞｯﾄ	6	
2	516G5-13151		RIVET,POP	ﾘﾍﾞｯﾄ	2	
3	22N55-13191		SEAT,HG	ｼｰﾄ	2	
4	22N55-13181		SEAL,PANEL-COVER	ｼｰﾙ	8	
-	22N55-13181		SEAL,PANEL-COVER	ｼｰﾙ	12	[HL][BKH]

FIG.106 POP RIVET [TUE][BBA][BBV][AW061][RWL][FE]

(F7Z251C0) ﾎﾟｯﾌﾟﾘﾍﾞｯﾄ

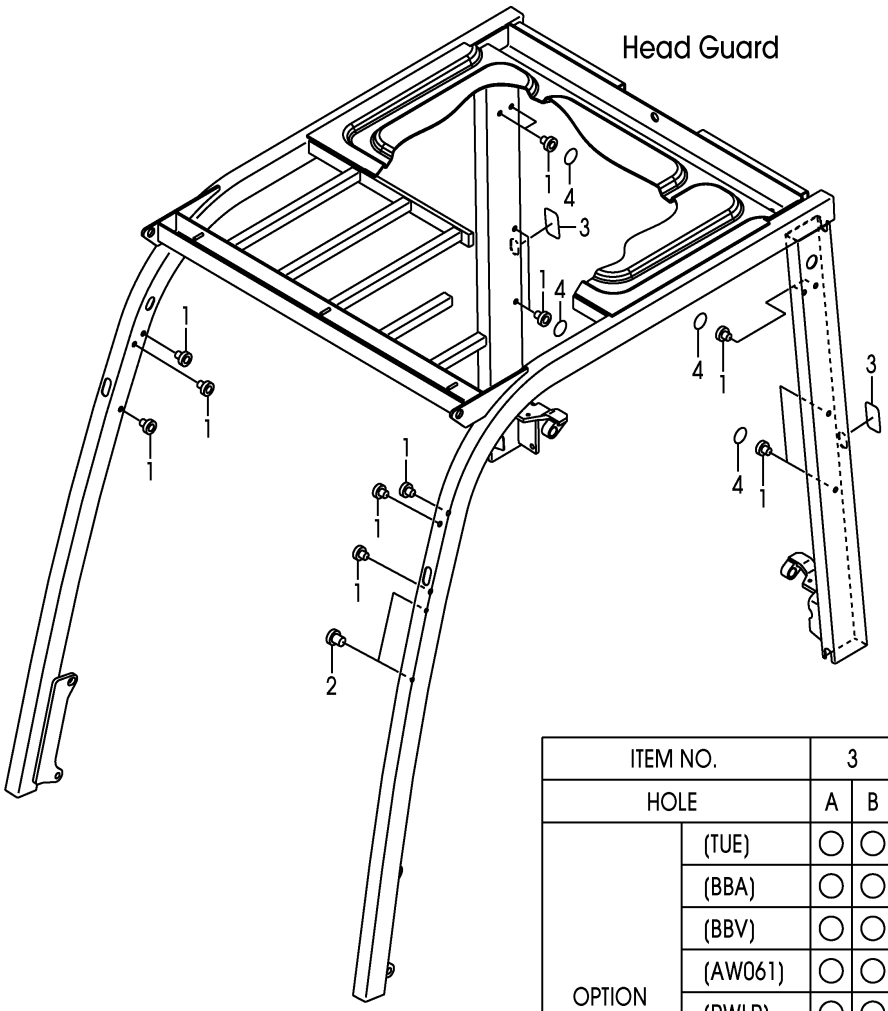

ITEM NO.		3		4							
HOLE		A	B	C	D	E	F	G	H	J	K
OPTION	(TUE)	○	○	○		○	○		○	○	○
	(BBA)	○	○	○	○	○	○	○	○		
	(BBV)	○	○	○	○	○	○	○	○		○
	(AW061)	○	○					○	○	○	○
	(RWLR)	○	○			○	○	○	○	○	○
	(RWLL)	○	○	○	○			○	○	○	○
	(RWL2)	○	○					○	○	○	○
	(FE)	○	○			○	○		○	○	○

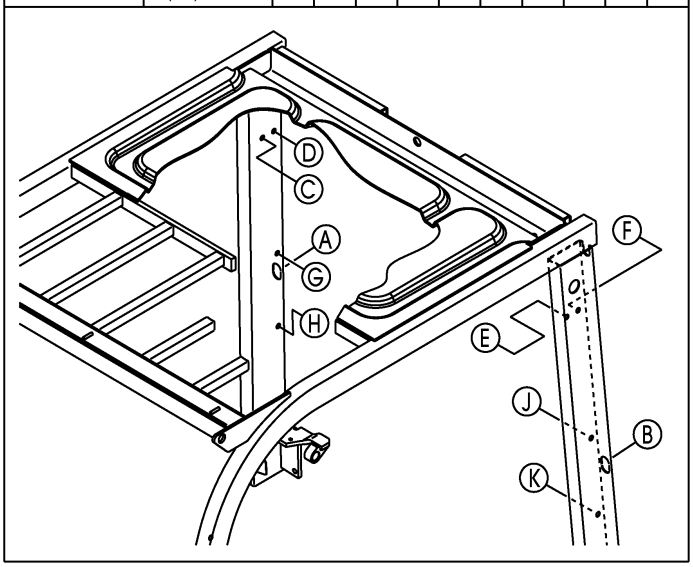

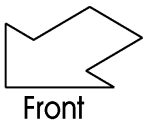

A:FD20C3Z FD20T3Z FD25C3Z FD25T3Z:176-

Item No	Part No.	Mark	Description		Req'd	Remarks : Serial No.
1	514A5-12011		RIVET,POP	ﾘﾍﾞｯﾄ	14	[TUE][BBA][BBV][AW061][RWLR] [RWLL][RWL2][FE]
2	516G5-13151		RIVET,POP	ﾘﾍﾞｯﾄ	2	[TUE][BBA][BBV][AW061][RWLR] [RWLL][RWL2][FE]
3	22N55-13191		SHEET,HG	ｼｰﾄ	2	[TUE][BBA][BBV][AW061][RWLR] [RWLL][RWL2][FE]
4	22N55-13181		SEAL,PANEL-COVER	ｼｰﾙ	6	[TUE][BBA][RWLR][RWLL]
-	22N55-13181		SEAL,PANEL-COVER	ｼｰﾙ	7	[BBV]
-	22N55-13181		SEAL,PANEL-COVER	ｼｰﾙ	4	[AW061][RWL2]
-	22N55-13181		SEAL,PANEL-COVER	ｼｰﾙ	5	[FE]

FIG.107 ACCEL PEDAL

(F7Z25220) アクセルペダル

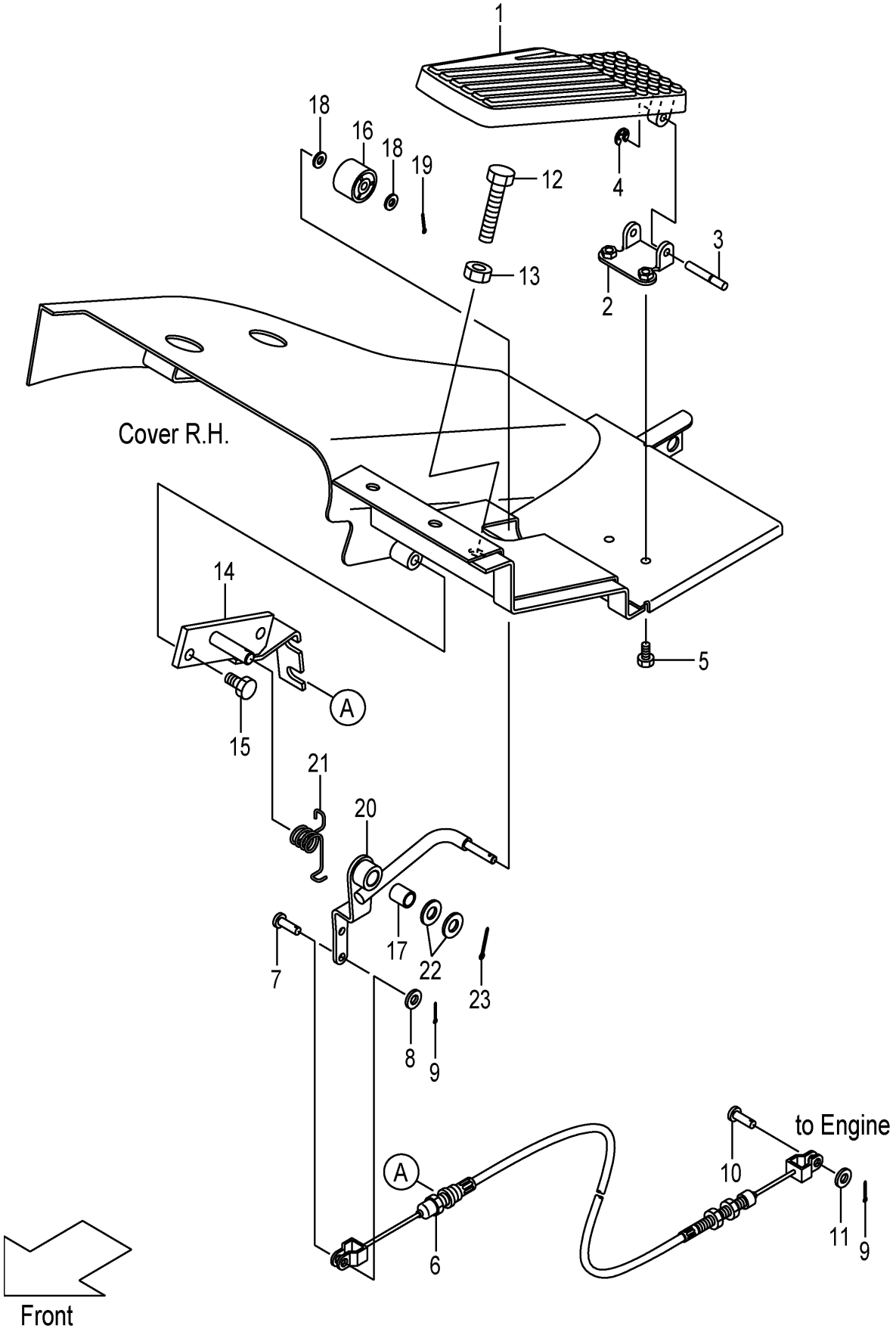

A:FD20C3Z FD20T3Z FD25C3Z FD25T3Z

Item No	Part No.	Mark	Description		Req'd	Remarks : Serial No.
A1	22N55-20211		PEDAL-ASSY,ACCEL	ｱｸｾﾙﾍﾟﾀﾞﾙｱｯｾﾝ	1	INC.1-4
1	NO PART NO.	#	PEDAL	ﾍﾟﾀﾞﾙ	1	
2	NO PART NO.	#	SUPPORT	ｻﾎﾟｰﾄ	1	
3	22N55-22121		SHAFT	ｼｬﾌﾄ	1	
4	22N55-22131		E-RING	Eﾘﾝｸﾞ	1	
5	01183-06012		BOLT	ﾎﾞﾙﾄ	2	
6	22U55-22102		CABLE,ACCEL	ｹｰﾌﾞﾙ	1	
7	02262-06015		PIN,CLEVIS	ﾋﾟﾝ	1	
8	02000-00006		WASHER	ﾜｯｼｬ	1	
9	02200-16015		PIN,COTTER	ﾋﾟﾝ	2	
10	22717-40061		PIN,CLEVIS	ﾋﾟﾝ	1	
11	02000-00005		WASHER	ﾜｯｼｬ	1	
12	01100-10040		BOLT	ﾎﾞﾙﾄ	1	
13	01400-00010		NUT	ﾅｯﾄ	1	
14	20A75-22001		BRACKET,ACCEL-LINK	ﾌﾞﾗｹｯﾄ	1	
15	01185-08016		BOLT	ﾎﾞﾙﾄ	2	
A2	20A75-20201		LINK-ASSY,ACCEL	ｱｸｾﾙﾘﾝｸｱｯｾﾝ	1	INC.16-20
16	214A5-22001		ROLLER	ﾛｰﾗ	1	
17	256C1-12111		BUSHING	ﾌﾞｯｼﾝｸﾞ	1	
18	02000-00006		WASHER	ﾜｯｼｬ	2	
19	02200-16010		PIN,COTTER	ﾋﾟﾝ	1	
20	NO PART NO.	#	LINK,ACCEL	ﾘﾝｸ	1	
21	22N55-22031		SPRING	ｽﾌﾟﾘﾝｸﾞ	1	
22	02000-00012		WASHER	ﾜｯｼｬ	2	
23	02200-03020		PIN,COTTER	ﾋﾟﾝ	1	

FIG.108 FOOT PEDAL (CLUTCH)

(F7Z25410) ﾌｯﾄﾍﾟﾀﾞﾙ

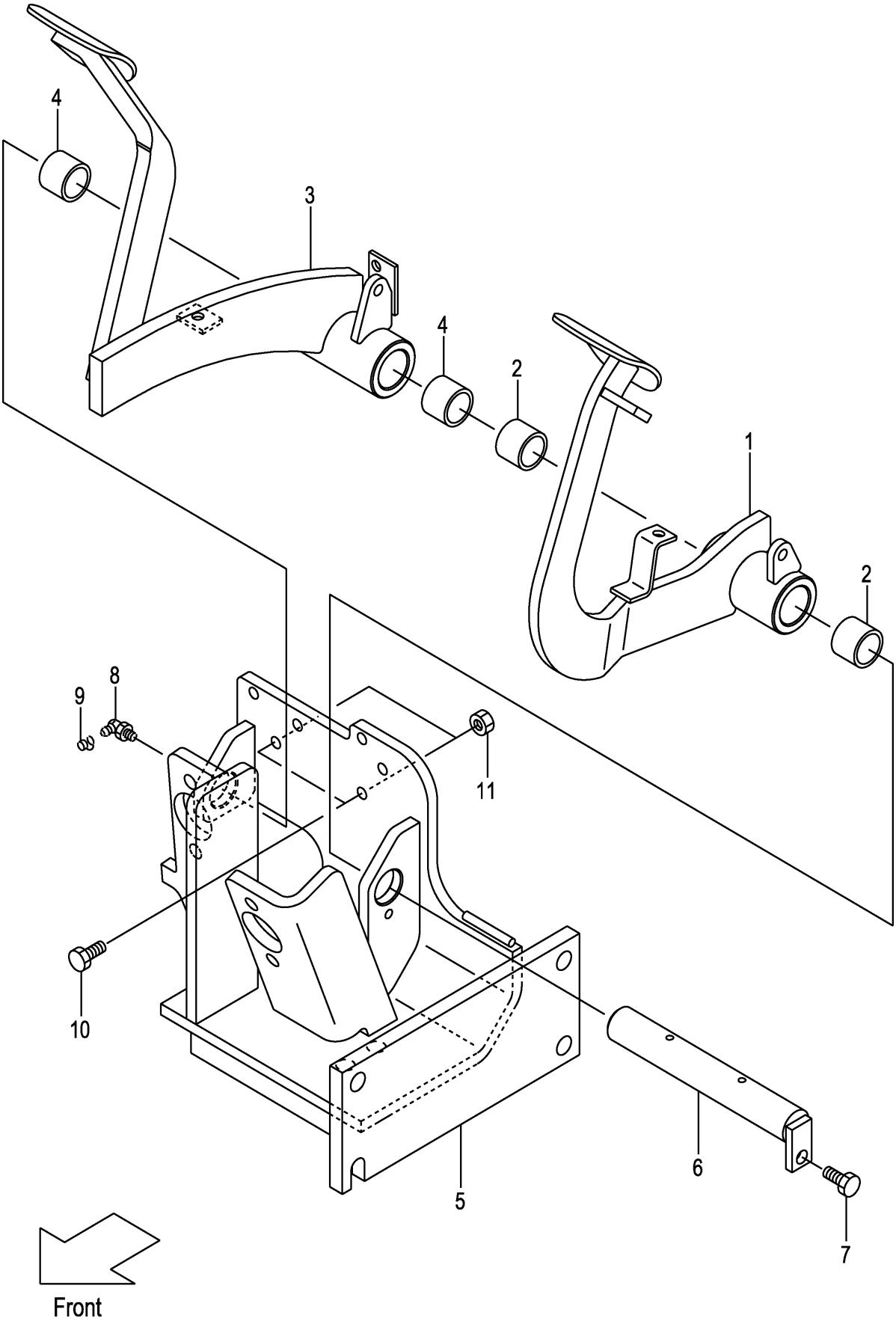

A:FD20C3Z FD25C3Z

Item No	Part No.	Mark	Description		Req'd	Remarks : Serial No.
A1	22N45-30303		PEDAL-ASSY,CLUTCH	ｸﾗｯﾁﾍﾟﾀﾞﾙｱｯｾﾝ	1	1-114 INC.1,2
-	22N45-30304		PEDAL-ASSY,CLUTCH	ｸﾗｯﾁﾍﾟﾀﾞﾙｱｯｾﾝ	1	115- INC.1,2
1	NO PART NO.	#	PEDAL,CLUTCH	ﾍﾟﾀﾞﾙ	1	
2	23655-42421		BUSHING,PEDAL	ﾌﾞｯｼﾝｸﾞ	2	
A2	22N45-40302		PEDAL-ASSY,BRAKE	ﾌﾞﾚｰｷﾍﾟﾀﾞﾙｱｯｾﾝ	1	1-114 INC.3,4
-	22N45-40303		PEDAL-ASSY,BRAKE	ﾌﾞﾚｰｷﾍﾟﾀﾞﾙｱｯｾﾝ	1	115- INC.3,4
3	NO PART NO.	#	PEDAL,BRAKE	ﾍﾟﾀﾞﾙ	1	
4	23655-42421		BUSHING,PEDAL	ﾌﾞｯｼﾝｸﾞ	2	
5	22N45-40202		BRACKET,PEDAL	ﾌﾞﾗｹｯﾄ	1	
6	22N45-42101		SHAFT,PEDAL	ｼｬﾌﾄ	1	
7	01183-08016		BOLT	ﾎﾞﾙﾄ	1	
8	04901-00190		FITTING	ﾌｨｯﾃｨﾝｸﾞ	1	
9	22199-12401		CAP,NIPPLE	ｷｬｯﾌﾟ	1	
10	01100-10025		BOLT	ﾎﾞﾙﾄ	2	
11	01402-00010		NUT	ﾅｯﾄ	2	

FIG.109 FOOT PEDAL (TOR-CON)

(F7Z25420) ﾌｯﾄﾍﾟﾀﾞﾙ

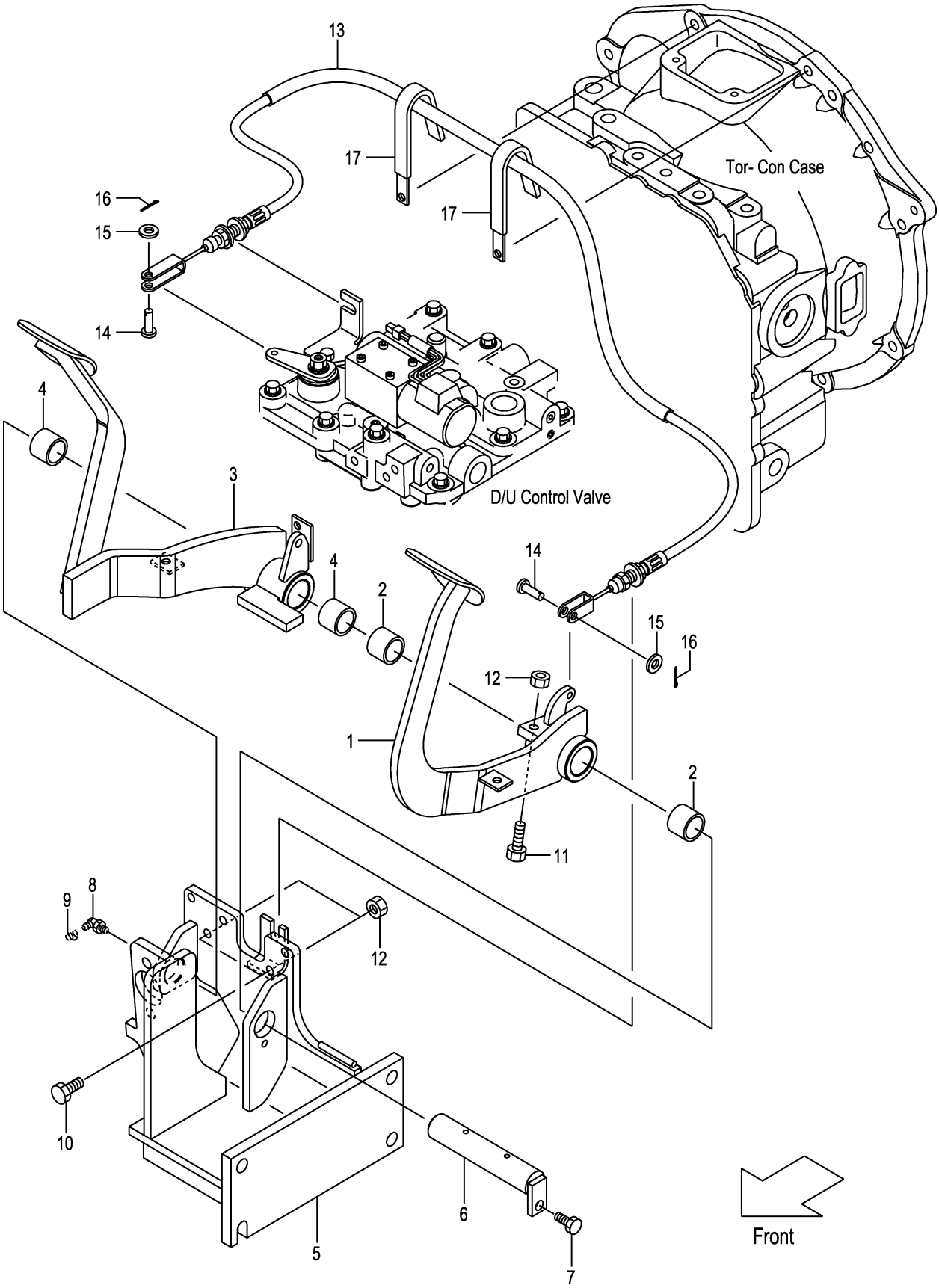

A:FD20T3Z FD25T3Z

Item No	Part No.	Mark	Description		Req'd	Remarks : Serial No.
A1	22N55-40402		PEDAL-ASSY,INCHING	ｲﾝﾁﾝｸﾞﾍﾟﾀﾞﾙｱｯｾﾝ	1	1-114 INC.1,2
-	22N55-40403		PEDAL-ASSY,INCHING	ｲﾝﾁﾝｸﾞﾍﾟﾀﾞﾙｱｯｾﾝ	1	115- INC.1,2
1	NO PART NO.	#	PEDAL,INCHING	ﾍﾟﾀﾞﾙ	1	
2	23655-42421		BUSHING,PEDAL	ﾌﾞｯｼﾝｸﾞ	2	
A2	22N55-40302		PEDAL-ASSY,BRAKE	ﾌﾞﾚｰｷﾍﾟﾀﾞﾙｱｯｾﾝ	1	1-114 INC.3,4
-	22N55-40303		PEDAL-ASSY,BRAKE	ﾌﾞﾚｰｷﾍﾟﾀﾞﾙｱｯｾﾝ	1	115- INC.3,4
3	NO PART NO.	#	PEDAL,BRAKE	ﾍﾟﾀﾞﾙ	1	
4	23655-42421		BUSHING,PEDAL	ﾌﾞｯｼﾝｸﾞ	2	
5	22N55-40202		BRACKET,PEDAL	ﾌﾞﾗｹｯﾄ	1	
6	22N55-42101		SHAFT,PEDAL	ｼｬﾌﾄ	1	
7	01183-08016		BOLT	ﾎﾞﾙﾄ	1	
8	04901-00190		FITTING	ﾌｨｯﾃｨﾝｸﾞ	1	
9	22199-12401		CAP,NIPPLE	ｷｬｯﾌﾟ	1	
10	01100-10025		BOLT	ﾎﾞﾙﾄ	2	
11	01120-10040		BOLT	ﾎﾞﾙﾄ	1	
12	01402-00010		NUT	ﾅｯﾄ	3	
13	22N55-42601		CABLE,INCHING	ｹｰﾌﾞﾙ	1	
14	02262-06020		PIN,CLEVIS	ﾋﾟﾝ	2	
15	02000-00006		WASHER	ﾜｯｼｬ	2	
16	02200-16015		PIN,COTTER	ﾋﾟﾝ	2	
17	214A2-42331		CLIP	ｸﾘｯﾌﾟ	2	1-111
-	22N55-42191		CLIP	ｸﾘｯﾌﾟ	2	112-

FIG.110 FOOT PEDAL CYLINDER (CLUTCH)

(F7Z25440) ﾌｯﾄﾍﾟﾀﾞﾙｼﾘﾝﾀﾞ

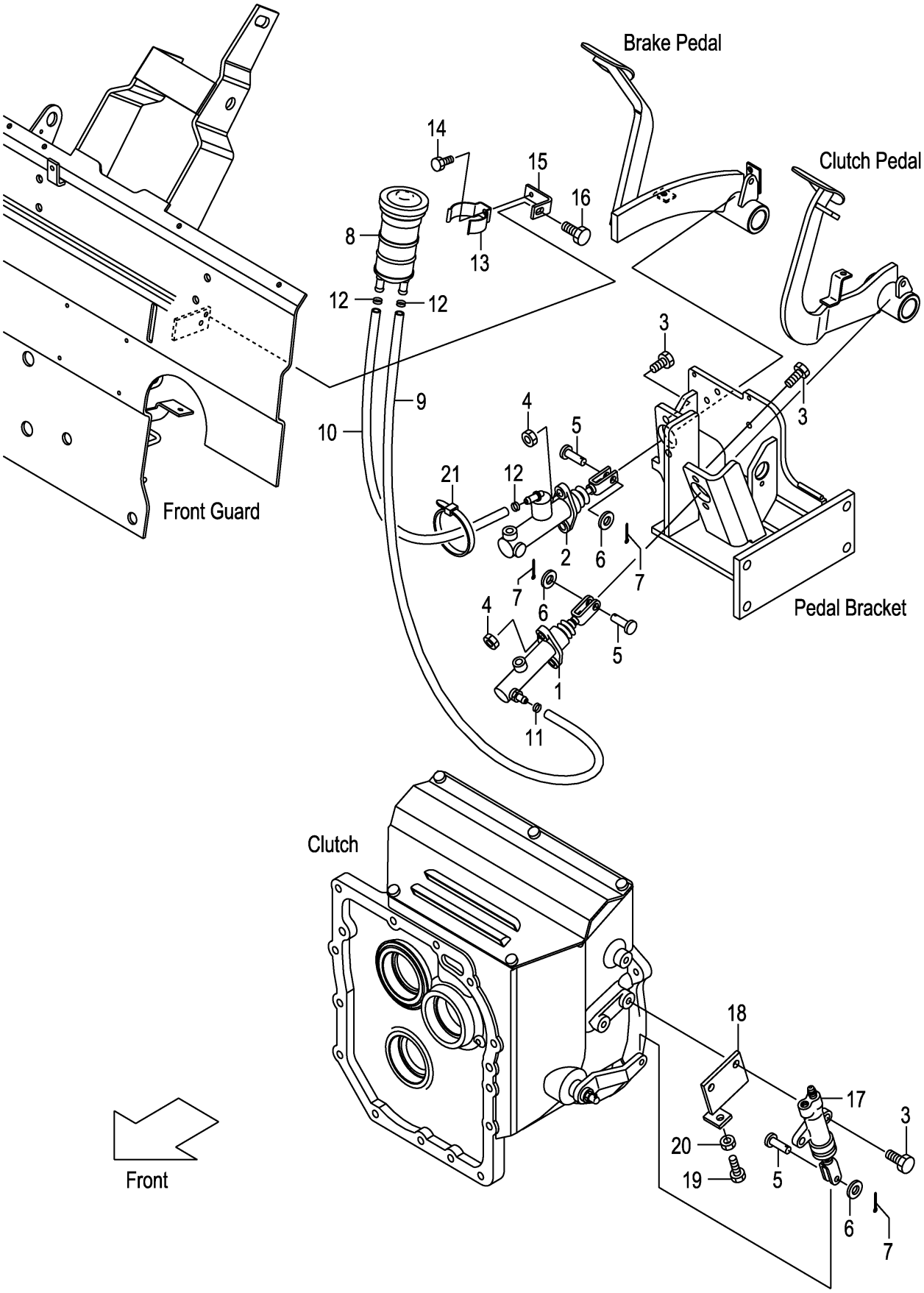

A:FD20C3Z FD25C3Z:1-121

Item No	Part No.	Mark	Description		Req'd	Remarks : Serial No.
1	239A5-40501		CYL,CLUTCH-MASTER	ｼﾘﾝﾀﾞ	1	SEE FIG.115
2	27045-40302		CYL,BRAKE-MASTER	ｼﾘﾝﾀﾞ	1	SEE FIG.116
3	01184-10030		BOLT	ﾎﾞﾙﾄ	6	
4	01400-00010		NUT	ﾅｯﾄ	4	
5	02262-08025		PIN,CLEVIS	ﾋﾟﾝ	3	
6	02000-00008		WASHER	ﾜｯｼｬ	3	
7	02200-02020		PIN,COTTER	ﾋﾟﾝ	3	
8	216G5-42011		TANK,RESERVE	ﾀﾝｸ	1	
9	22N45-32151		HOSE,RESERVE	ﾎｰｽ	1	
10	22N45-32161		HOSE,RESERVE	ﾎｰｽ	1	
11	25595-42491		BAND,HOSE	ﾊﾞﾝﾄﾞ	1	
12	25785-43091		BAND,HOSE	ﾊﾞﾝﾄﾞ	3	
13	224G5-42061		CLIP,RESERVE-TANK	ｸﾘｯﾌﾟ	1	
14	01183-06010		BOLT	ﾎﾞﾙﾄ	1	
15	22N55-42141		BRACKET	ﾌﾞﾗｹｯﾄ	1	
16	01185-08016		BOLT	ﾎﾞﾙﾄ	1	
17	214A5-32312		CYL,CLUTCH-RELEASE	ｼﾘﾝﾀﾞ	1	SEE FIG.117
18	22N45-32201		BRACKET,RELEASE-CYL	ﾌﾞﾗｹｯﾄ	1	
19	01100-10025		BOLT	ﾎﾞﾙﾄ	1	
20	01402-00010		NUT	ﾅｯﾄ	1	
21	04913-11100		BAND	ﾊﾞﾝﾄﾞ	1	

FIG.110A FOOT PEDAL CYLINDER (CLUTCH)

(F7Z25441) ﾌｯﾄﾍﾟﾀﾞﾙｼﾘﾝﾀﾞ

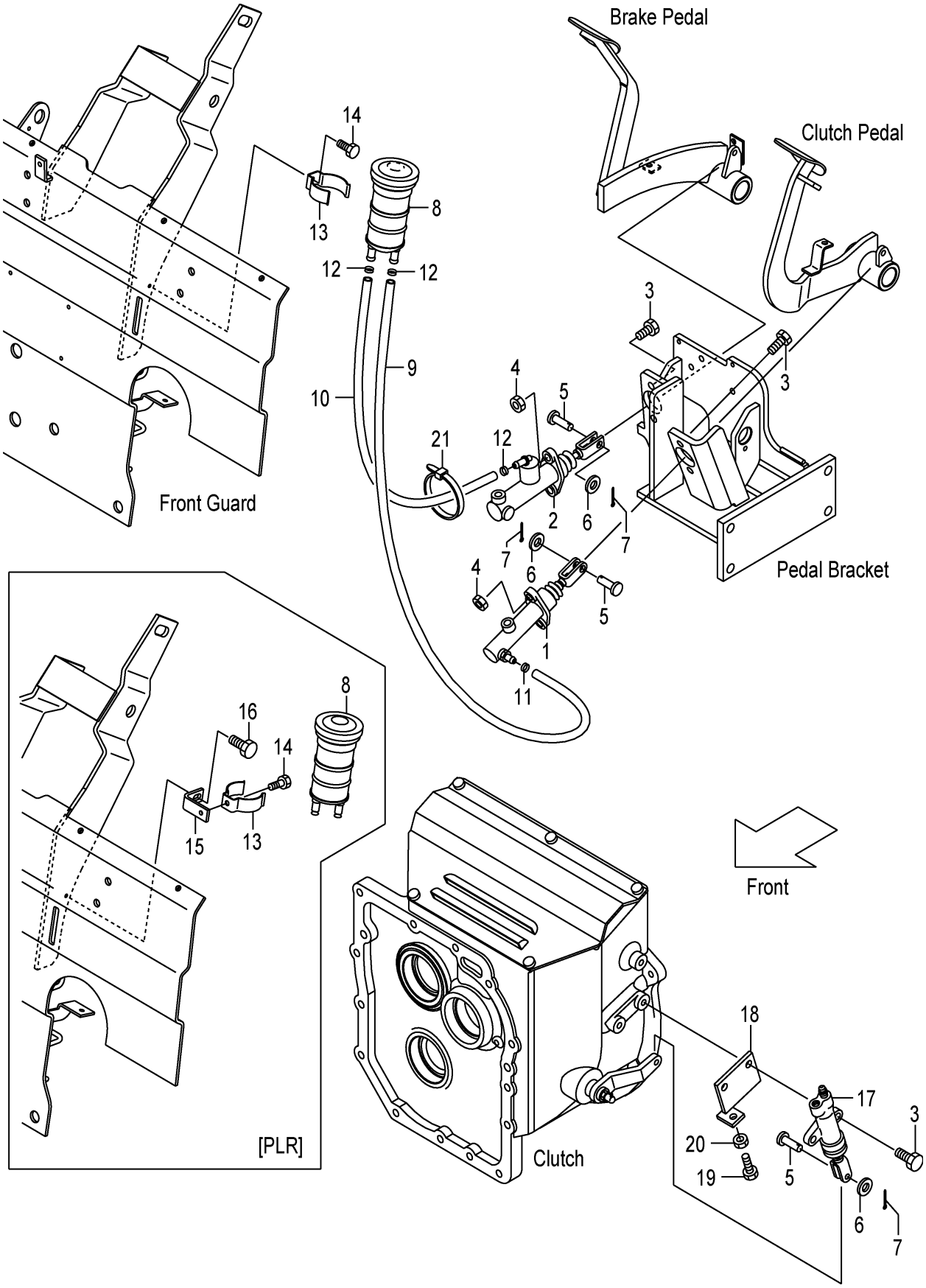

A:FD20C3Z FD25C3Z:122-

Item No	Part No.	Mark	Description		Req'd	Remarks : Serial No.
1	239A5-40501		CYL,CLUTCH-MASTER	ｼﾘﾝﾀﾞ	1	SEE FIG.115
2	27045-40302		CYL,BRAKE-MASTER	ｼﾘﾝﾀﾞ	1	SEE FIG.116
3	01184-10030		BOLT	ﾎﾞﾙﾄ	6	
4	01400-00010		NUT	ﾅｯﾄ	4	
5	02262-08025		PIN,CLEVIS	ﾋﾟﾝ	3	
6	02000-00008		WASHER	ﾜｯｼｬ	3	
7	02200-02020		PIN,COTTER	ﾋﾟﾝ	3	
8	216G5-42011		TANK,RESERVE	ﾀﾝｸ	1	
9	22N45-32151		HOSE,RESERVE	ﾎｰｽ	1	
10	22N45-32161		HOSE,RESERVE	ﾎｰｽ	1	
11	25595-42491		BAND,HOSE	ﾊﾞﾝﾄﾞ	1	
12	25785-43091		BAND,HOSE	ﾊﾞﾝﾄﾞ	3	
13	224G5-42061		CLIP,RESERVE-TANK	ｸﾘｯﾌﾟ	1	
14	01183-06010		BOLT	ﾎﾞﾙﾄ	1	
15	52N52-C3981		BRACKET	ﾌﾞﾗｹｯﾄ	1	[PLR]
16	01185-06012		BOLT	ﾎﾞﾙﾄ	1	[PLR]
17	214A5-32312		CYL,CLUTCH-RELEASE	ｼﾘﾝﾀﾞ	1	SEE FIG.117
18	22N45-32201		BRACKET,RELEASE-CYL	ﾌﾞﾗｹｯﾄ	1	
19	01100-10025		BOLT	ﾎﾞﾙﾄ	1	
20	01402-00010		NUT	ﾅｯﾄ	1	
21	04913-11100		BAND	ﾊﾞﾝﾄﾞ	1	

FIG.111 FOOT PEDAL CYLINDER (TOR-CON)

(F7Z25450) ﾌｯﾄﾍﾟﾀﾞﾙｼﾘﾝﾀﾞ

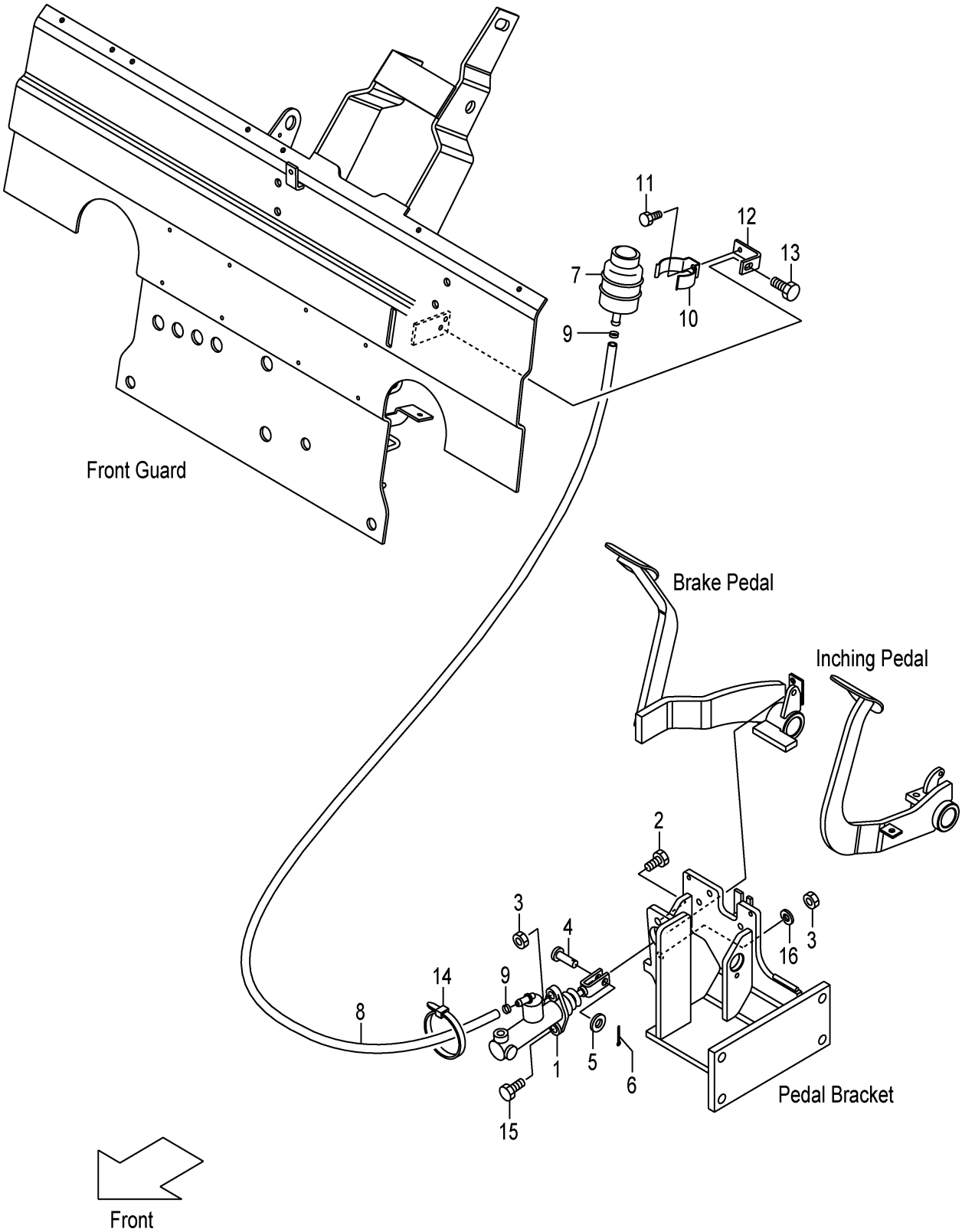

A:FD20T3Z FD25T3Z:1-121

Item No	Part No.	Mark	Description		Req'd	Remarks : Serial No.
1	27045-40302		CYL,BRAKE-MASTER	ｼﾘﾝﾀﾞ	1	SEE FIG.116
2	01184-10030		BOLT	ﾎﾞﾙﾄ	1	
3	01400-00010		NUT	ﾅｯﾄ	2	
4	02262-08025		PIN,CLEVIS	ﾋﾟﾝ	1	
5	02000-00008		WASHER	ﾜｯｼｬ	1	
6	02200-02020		PIN,COTTER	ﾋﾟﾝ	1	
7	23775-42101		TANK,RESERVE	ﾀﾝｸ	1	
8	22655-42591		HOSE,RESERVE	ﾎｰｽ	1	
9	25595-42491		BAND,HOSE	ﾊﾞﾝﾄﾞ	2	
10	224G5-42061		CLIP,RESERVE-TANK	ｸﾘｯﾌﾟ	1	
11	01183-06010		BOLT	ﾎﾞﾙﾄ	1	
12	22N55-42141		BRACKET	ﾌﾞﾗｹｯﾄ	1	
13	01185-08016		BOLT	ﾎﾞﾙﾄ	1	
14	04913-11100		BAND	ﾊﾞﾝﾄﾞ	1	
15	01100-10030		BOLT	ﾎﾞﾙﾄ	1	
16	02010-00010		WASHER	ﾜｯｼｬ	1	

FIG.111A FOOT PEDAL CYLINDER (TOR-CON)

(F7Z25451) ﾌｯﾄﾍﾟﾀﾞﾙｼﾘﾝﾀﾞ

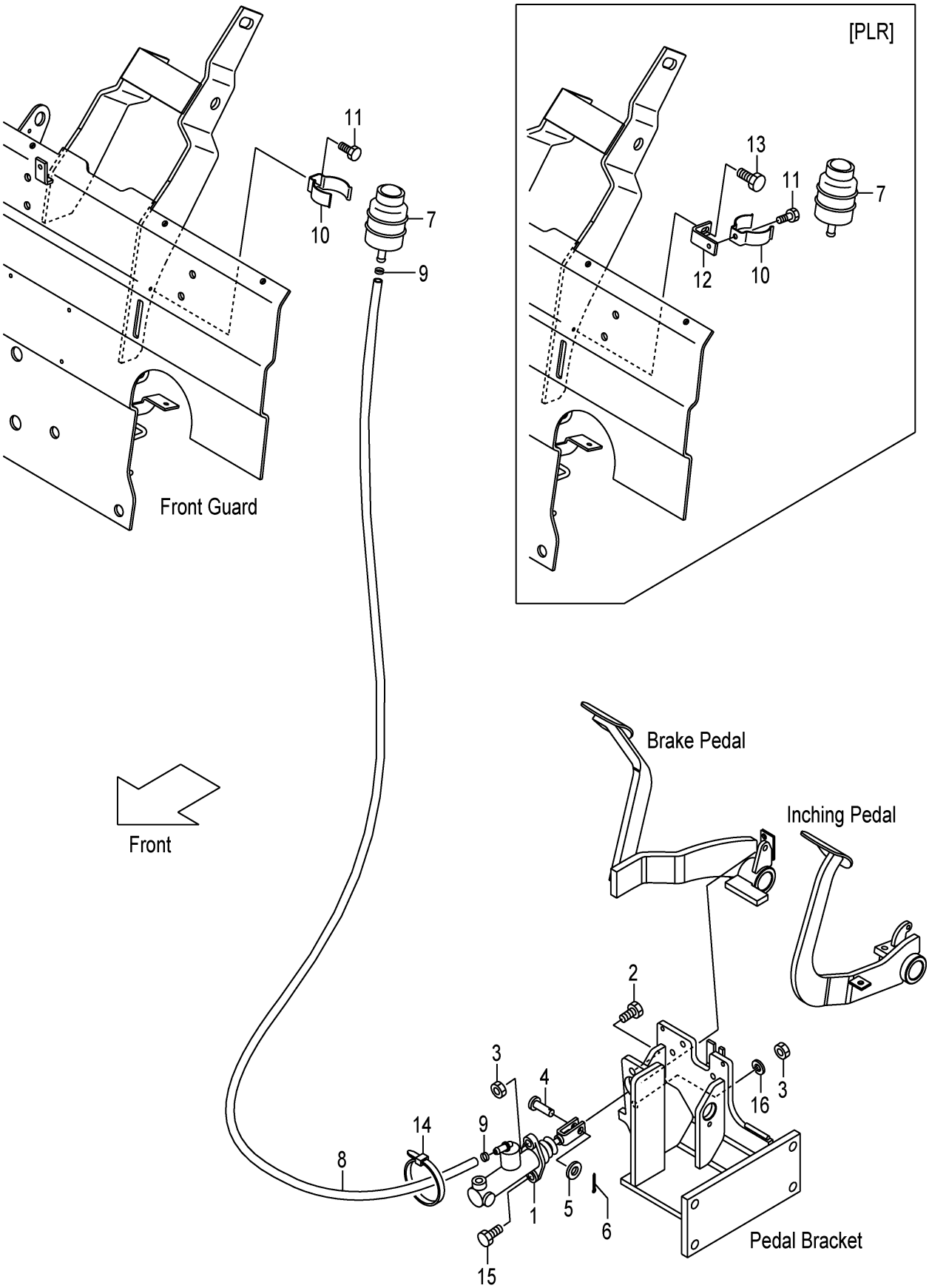

A:FD20T3Z FD25T3Z:122-

Item No	Part No.	Mark	Description		Req'd	Remarks : Serial No.
1	27045-40302		CYL,BRAKE-MASTER	ｼﾘﾝﾀﾞ	1	SEE FIG.116
2	01184-10030		BOLT	ﾎﾞﾙﾄ	1	
3	01400-00010		NUT	ﾅｯﾄ	2	
4	02262-08025		PIN,CLEVIS	ﾋﾟﾝ	1	
5	02000-00008		WASHER	ﾜｯｼｬ	1	
6	02200-02020		PIN,COTTER	ﾋﾟﾝ	1	
7	23775-42101		TANK,RESERVE	ﾀﾝｸ	1	
8	22655-42591		HOSE,RESERVE	ﾎｰｽ	1	
9	25595-42491		BAND,HOSE	ﾊﾞﾝﾄﾞ	2	
10	224G5-42061		CLIP,RESERVE-TANK	ｸﾘｯﾌﾟ	1	
11	01183-06010		BOLT	ﾎﾞﾙﾄ	1	
12	52N52-C3981		BRACKET	ﾌﾞﾗｹｯﾄ	1	[PLR]
13	01185-06012		BOLT	ﾎﾞﾙﾄ	1	[PLR]
14	04913-11100		BAND	ﾊﾞﾝﾄﾞ	1	
15	01100-10030		BOLT	ﾎﾞﾙﾄ	1	
16	02010-00010		WASHER	ﾜｯｼｬ	1	

FIG.112 BRAKE PIPE (CLUTCH)

(F7Z25490) ﾌﾞﾚｰｷﾊﾟｲﾌﾟ

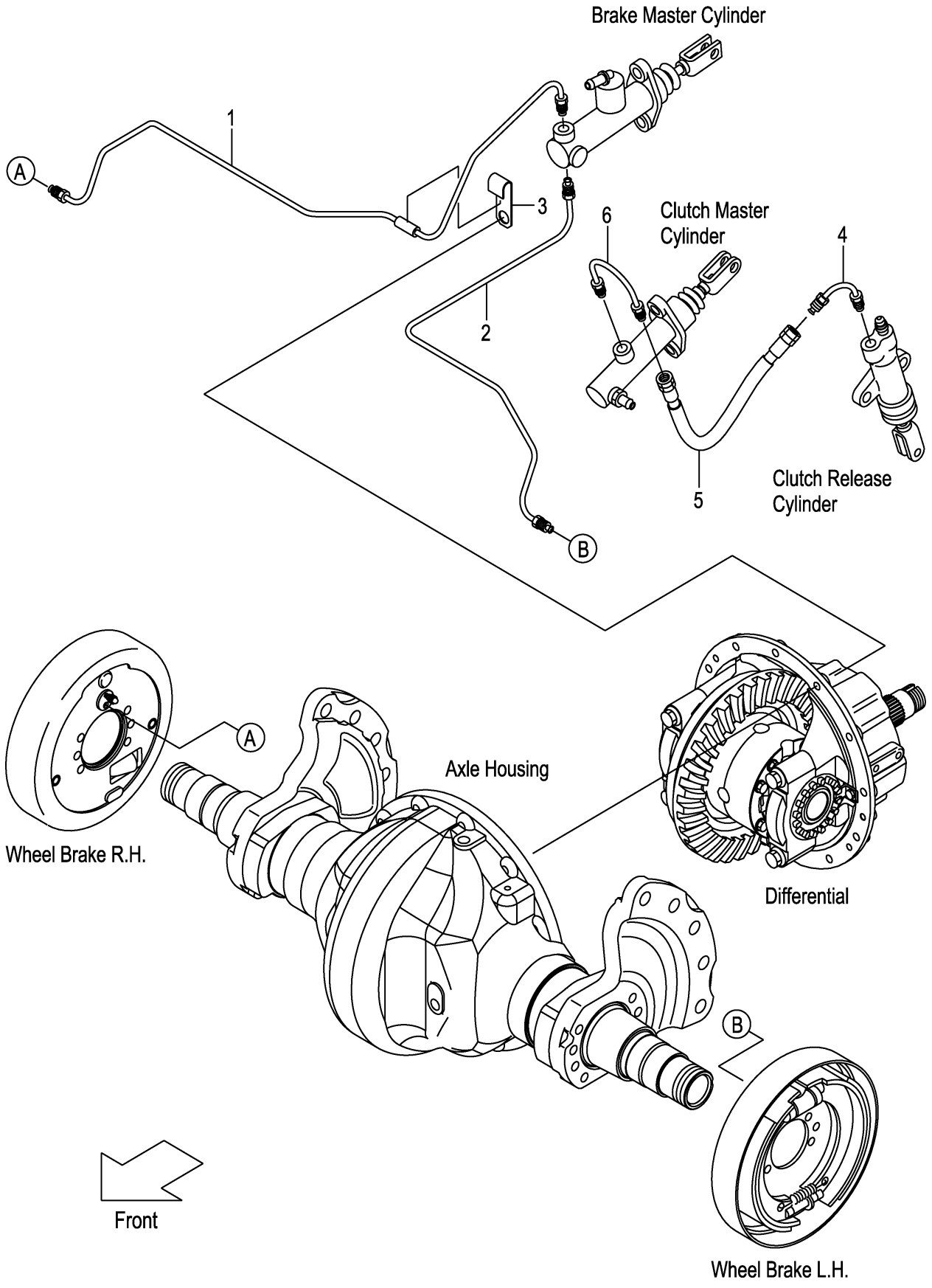

FIG.112

(F7Z25490)

A:FD20C3Z FD25C3Z

Item No	Part No.	Mark	Description		Req'd	Remarks : Serial No.
1	22N45-42701		PIPE,BRAKE,RH	ﾊﾟｲﾌﾟ	1	
2	22N45-42801		PIPE,BRAKE,LH	ﾊﾟｲﾌﾟ	1	
3	22N55-42171		CLIP,PIPE	ｸﾘｯﾌﾟ	1	
4	239A5-42471		PIPE,CLUTCH-MASTER	ﾊﾟｲﾌﾟ	1	
5	22N45-32131		HOSE,BRAKE	ﾎｰｽ	1	
6	22N45-32101		PIPE,MASTER-CYL	ﾊﾟｲﾌﾟ	1	

FIG.113 BRAKE PIPE (TOR-CON)

(F7Z254A0) ﾌﾞﾚｰｷﾊﾟｲﾌﾟ

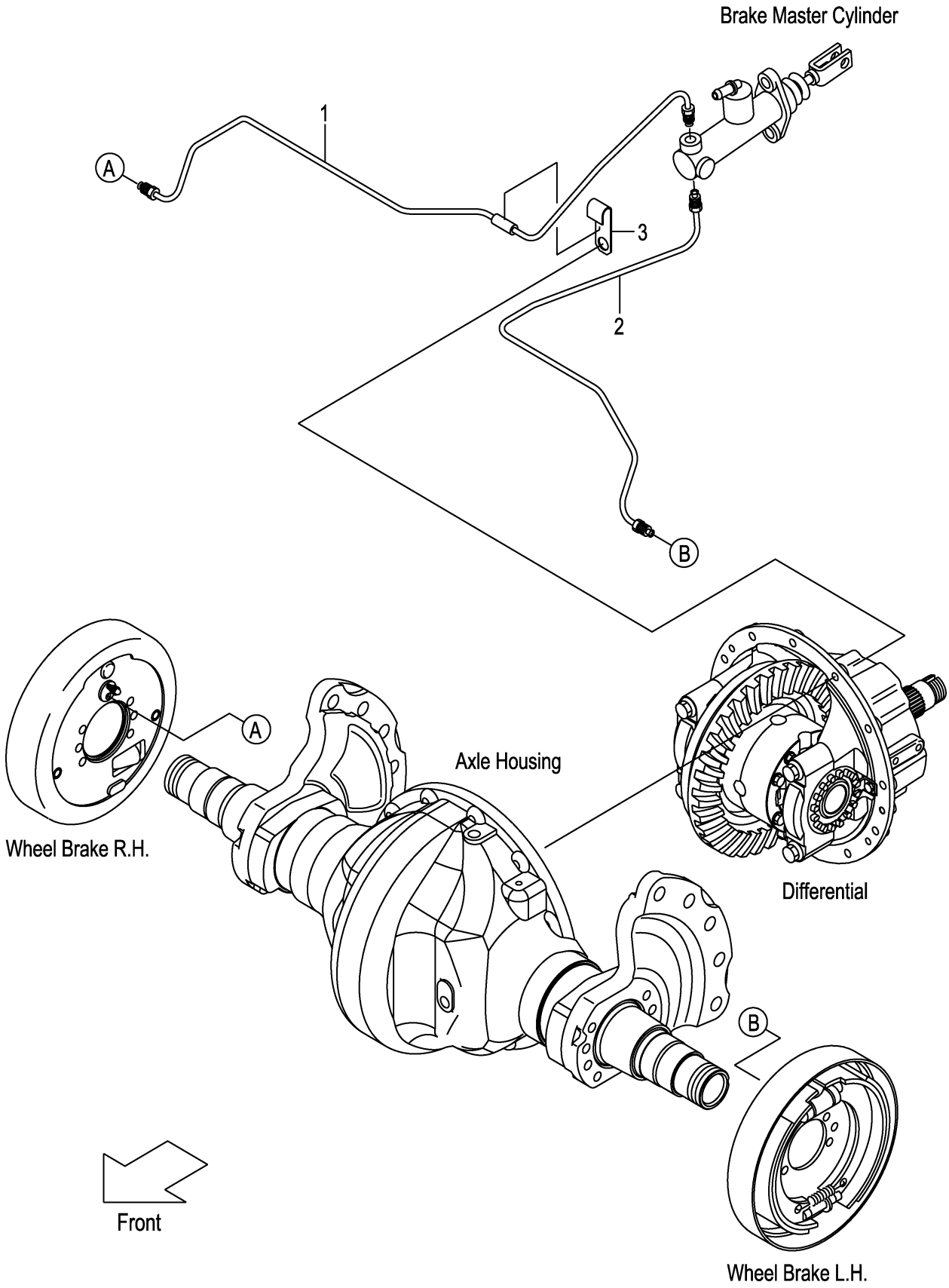

A:FD20T3Z FD25T3Z

Item No	Part No.	Mark	Description	Req'd	Remarks : Serial No.
1	22N55-42702		PIPE,BRAKE,RH ﾊﾟｲﾌﾟ	1	
2	22N55-42802		PIPE,BRAKE,LH ﾊﾟｲﾌﾟ	1	
3	22N55-42171		CLIP,PIPE ｸﾘｯﾌﾟ	1	

FIG.114 FOOT PEDAL PARTS

(F7Z254E0) ﾌｯﾄﾍﾟﾀﾞﾙﾊﾟｰﾂ

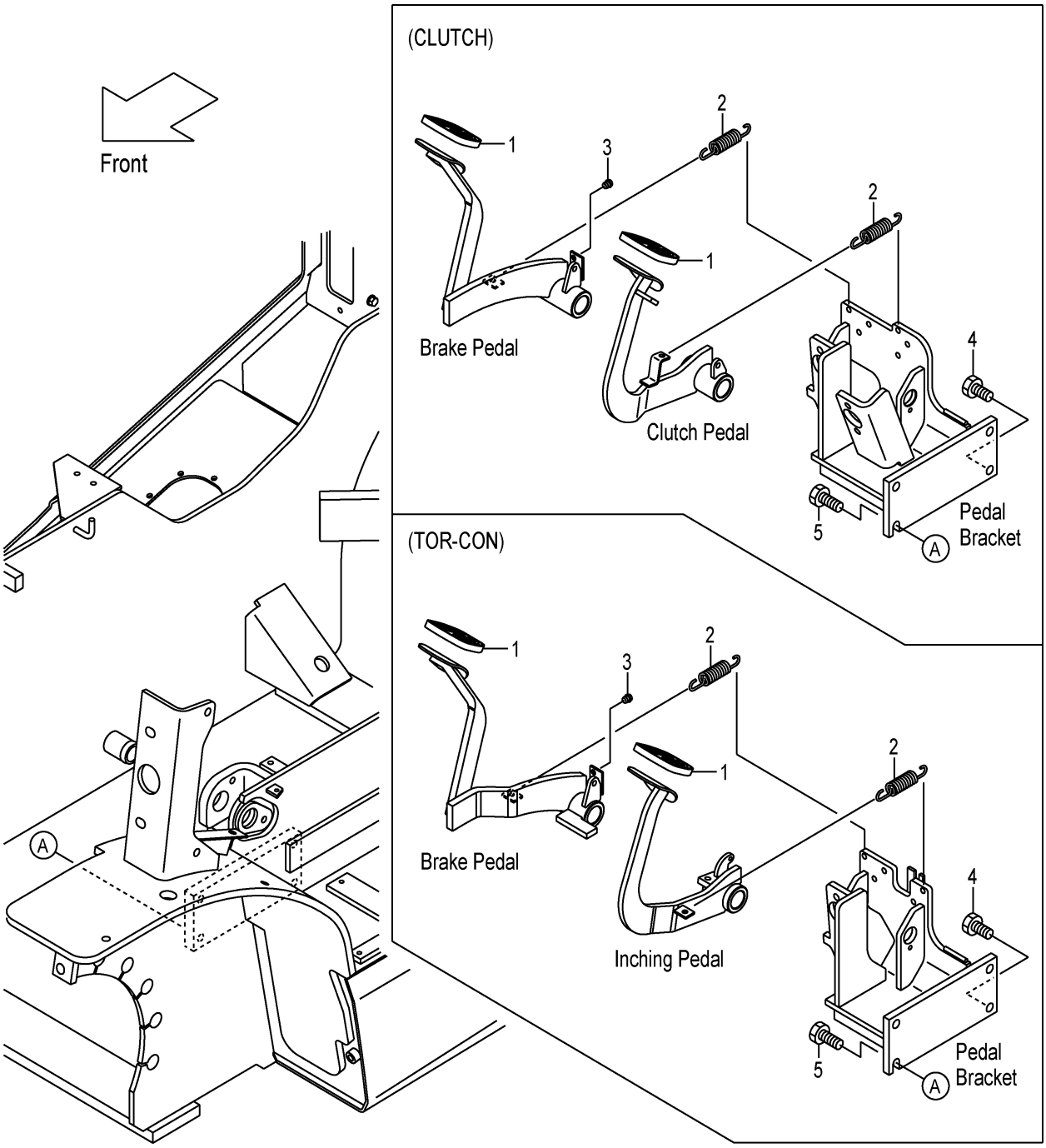

FIG.114

(F7Z254E0)

A:FD20C3Z FD20T3Z FD25C3Z FD25T3Z

Item No	Part No.	Mark	Description		Req'd	Remarks : Serial No.
1	239A5-42301		COVER,HEAD	ｶﾊﾞｰ	2	
2	24235-42091		SPRING	ｽﾌﾟﾘﾝｸﾞ	2	
3	23235-40091		RUBBER	ﾗﾊﾞｰ	1	
4	01184-12030		BOLT	ﾎﾞﾙﾄ	4	(-2005.5.11)
-	01184-12030		BOLT	ﾎﾞﾙﾄ	3	(2005.5.12-)
5	01186-12035		BOLT	ﾎﾞﾙﾄ	1	(2005.5.12-)

FIG.115 CLUTCH MASTER CYLINDER (CLUTCH)

(F7Z254K0) クラッチマスタシリンダ

KIT

K1 901

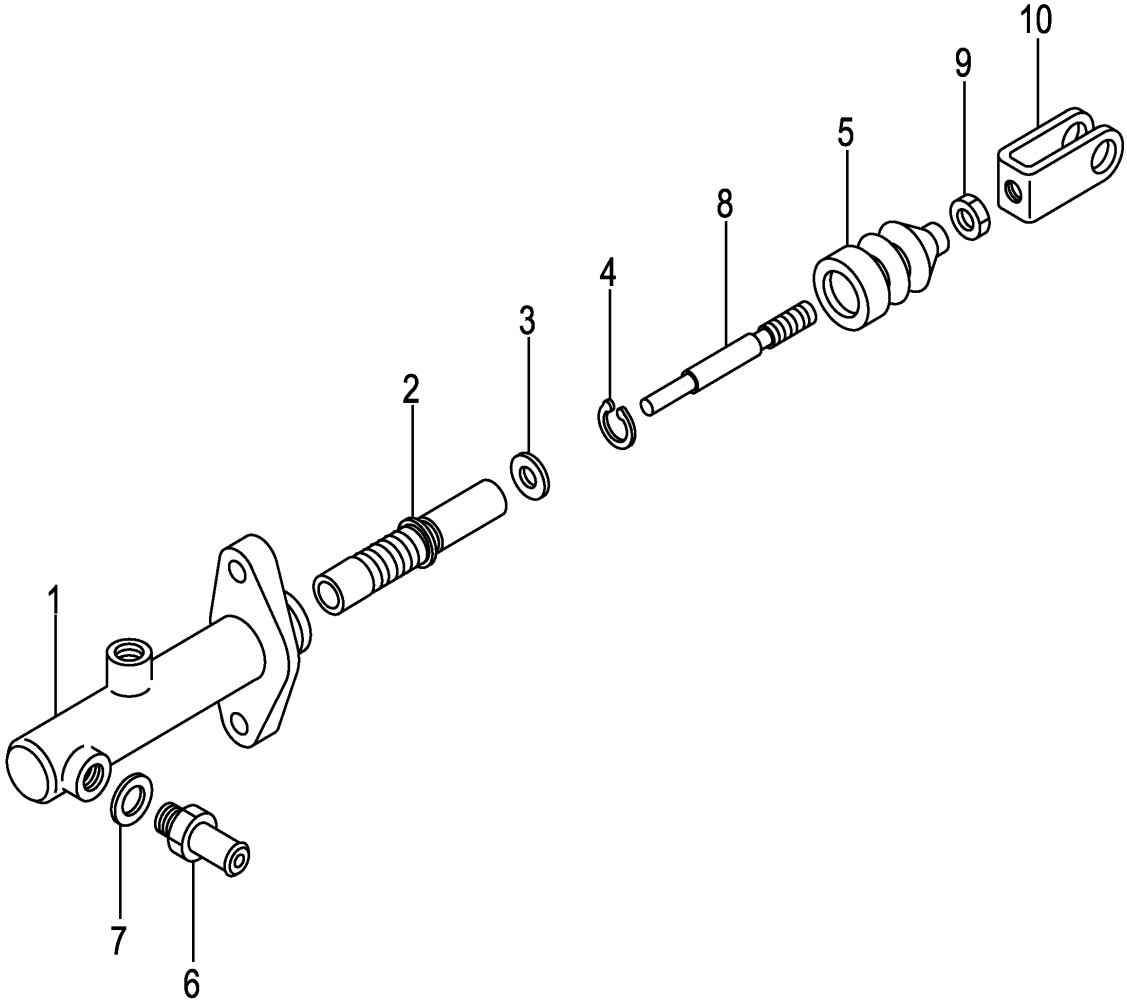

A:FD20C3Z FD25C3Z

Item No	Part No.	Mark	Description		Req'd	Remarks : Serial No.
A1	239A5-40501		CYL-ASSY,CLUTCH-MASTER	クラッチマスタシリンダアッセン	1	INC.1-10
901	216G5-32201	K1	KIT,REPAIR	リペアキット	1	INC.2-5
1	NO PART NO.	#	BODY,CYL	ボディ	1	
2	NO PART NO.	#*	PISTON	ピストン	1	
3	NO PART NO.	#*	PLATE,PISTON-STOPPER	プレート	1	
4	NO PART NO.	#*	RING,SNAP	リング	1	
5	NO PART NO.	#*	BOOT	ブーツ	1	
6	216G5-32331		UNION	ユニオン	1	
7	216G5-32341		GASKET	ガスケット	1	
8	NO PART NO.	#	ROD,PUSH	ロッド	1	
9	01402-00008		NUT	ナット	1	
10	25595-42452		CLEVIS	クレビス	1	

FIG.116 BRAKE MASTER CYLINDER

(F7Z254M0) ﾌﾞﾚｰｷﾏｽﾀｼﾘﾝﾀﾞ

KIT

K1 901 K2 902

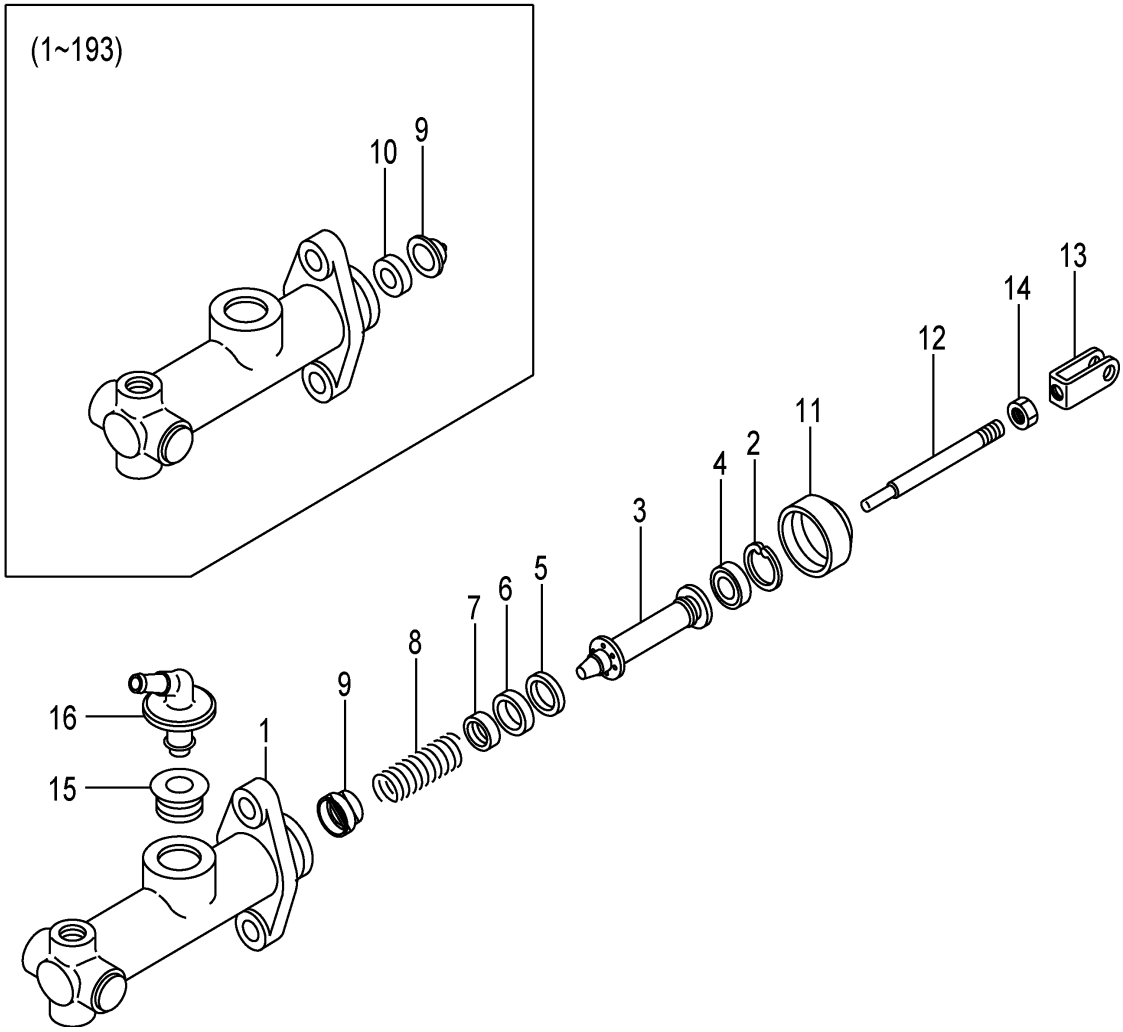

A:FD20C3Z FD20T3Z FD25C3Z FD25T3Z

Item No	Part No.	Mark	Description		Req'd	Remarks : Serial No.
A1	27045-40302		CYL-ASSY,BRAKE-MASTER	ﾌﾞﾚｰｷﾏｽﾀｼﾘﾝﾀﾞｱｯｾﾝ	1	INC.1-16
901	25595-42501	K1	KIT,REPAIR	ﾘﾍﾟｱｷｯﾄ	1	1-193 INC.2-11
902	25595-42502	K2	KIT,REPAIR	ﾘﾍﾟｱｷｯﾄ	1	194- INC.2-9,11
1	NO PART NO.	#	BODY,CYL	ﾎﾞﾃﾞｨ	1	
2	NO PART NO.	#*	RING,SNAP	ﾘﾝｸﾞ	1	
3	NO PART NO.	#*	PISTON	ﾋﾟｽﾄﾝ	1	
4	NO PART NO.	#*	CAP,SECONDARY	ｷｬｯﾌﾟ	1	
5	NO PART NO.	#*	SPACER	ｽﾍﾟｰｻ	1	
6	NO PART NO.	#*	CAP,PRIMARY	ｷｬｯﾌﾟ	1	
7	NO PART NO.	#*	SEAT,SPRING	ｼｰﾄ	1	
8	NO PART NO.	#*	SPRING	ｽﾌﾟﾘﾝｸﾞ	1	
9	NO PART NO.	#*	VALVE	ﾊﾞﾙﾌﾞ	1	
10	NO PART NO.	#*	SEAT,VALVE	ｼｰﾄ	1	1-193
11	NO PART NO.	#*	BOOT	ﾌﾞｰﾂ	1	
A2	25595-42482		ROD-ASSY,PUSH	ﾌﾟｯｼｭﾛｯﾄﾞｱｯｾﾝ	1	INC.12-14
12	NO PART NO.	#	ROD,PUSH	ﾛｯﾄﾞ	1	
13	25595-42452		CLEVIS	ｸﾚﾋﾞｽ	1	
14	01402-00008		NUT	ﾅｯﾄ	1	
15	25595-42421		BUSHING	ﾌﾞｯｼﾝｸﾞ	1	
16	25595-42411		UNION,FILLER	ﾕﾆｵﾝ	1	

FIG.117 CLUTCH RELEASE CYLINDER (CLUTCH)

(F7Z254P0) クラッチリリースシリンダ

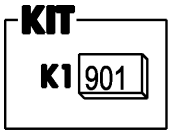

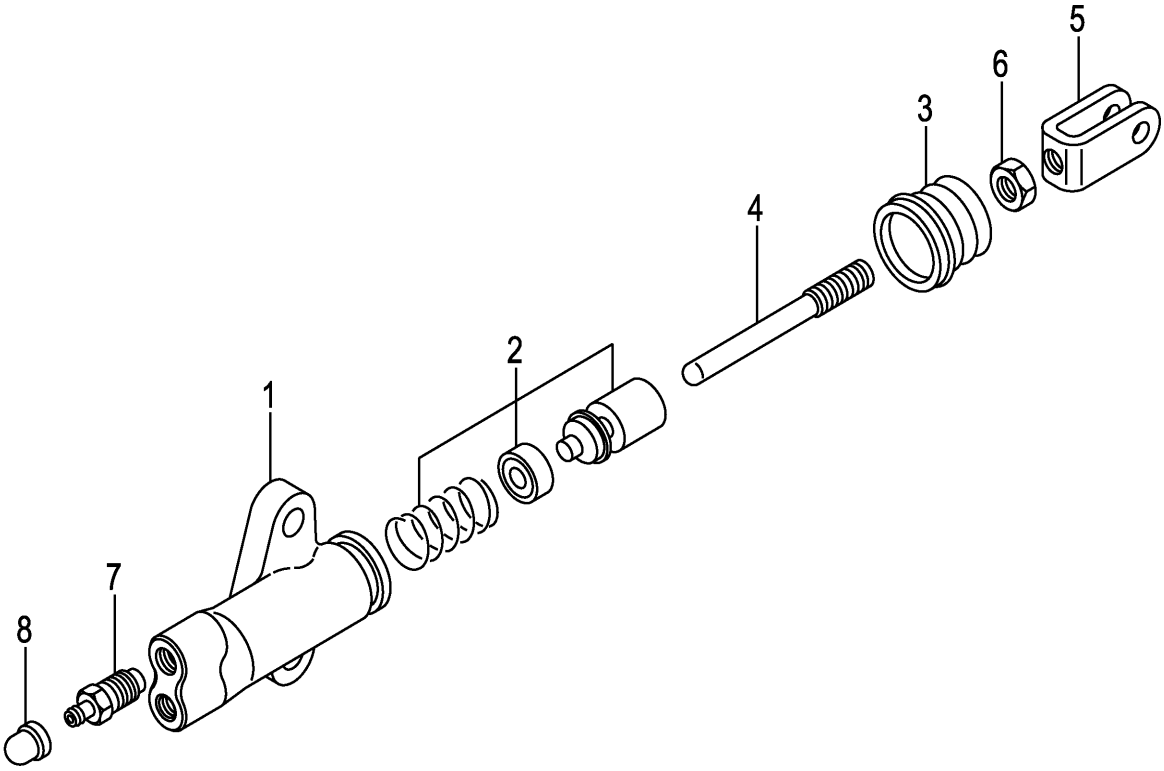

A:FD20C3Z FD25C3Z

Item No	Part No.	Mark	Description		Req'd	Remarks : Serial No.
A1	214A5-32312		CYL-ASSY,CLUTCH-RELEASE	クラッチリリースシリンダアッセン	1	INC.1-8
901	214A5-33012	K1	KIT,REPAIR	リペアキット	1	INC.2,3
1	NO PART NO.	#	BODY,CYL	ボディ	1	
2	NO PART NO.	#*	PISTON	ピストン	1	
3	NO PART NO.	#*	BOOT	ブーツ	1	
A2	214A5-33052		ROD-ASSY,PUSH	プッシュロッドアッセン	1	INC.4-6
4	214A5-33062		ROD,PUSH	ロッド	1	
5	25595-42452		CLEVIS	クレビス	1	
6	01402-00008		NUT	ナット	1	
7	214A5-33031		VALVE,BLEEDER	バルブ	1	
8	214A5-33041		CAP,BLEEDER	キャップ	1	

FIG.118 BRAKE LEVER

(F7Z25510) ﾌﾞﾚｰｷﾚﾊﾞｰ

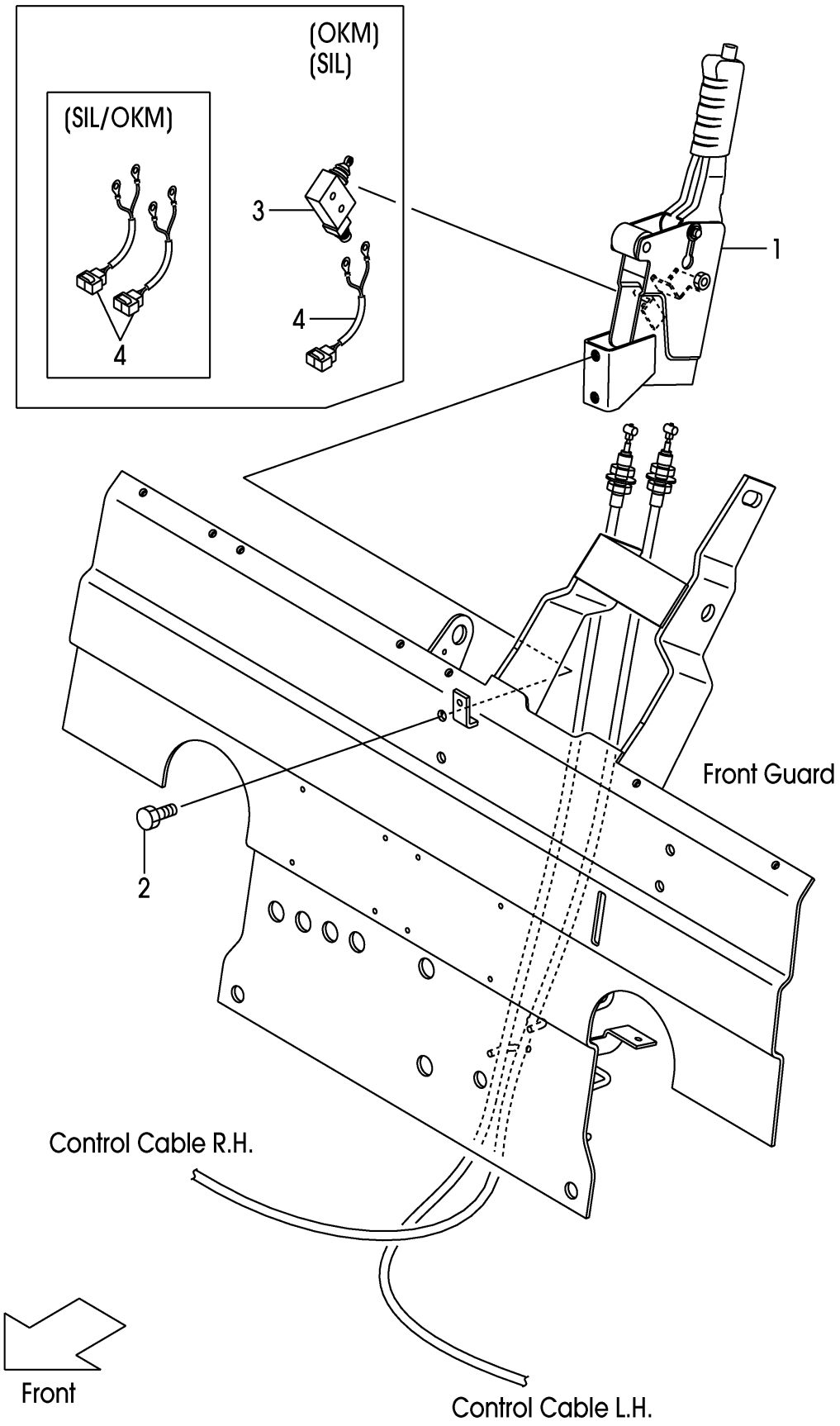

FIG.118

(F7Z25510)

A:FD20C3Z FD20T3Z FD25C3Z FD25T3Z

Item No	Part No.	Mark	Description	Req'd	Remarks : Serial No.
1	22N55-50101		LEVER,PARKING-BRAKE レバー	1	1-162
-	22N55-50201		LEVER,PARKING-BRAKE レバー	1	163-
-	22N55-50101		LEVER,PARKING-BRAKE レバー	1	[OKM][SIL][SIL/OKM]
2	01184-10025		BOLT ボルト	2	
3	27912-62441		SWITCH,MICRO スイッチ	1	[OKM][SIL][SIL/OKM]
4	278M2-42061		WIRE-HARNESS,SWITCH ワイヤハーネス	1	[OKM][SIL]
-	278M2-42061		WIRE-HARNESS,SWITCH ワイヤハーネス	2	[SIL/OKM]

FIG.119 BRAKE LEVER [PLR]

(F7Z25520) ﾌﾞﾚｰｷﾚﾊﾞｰ

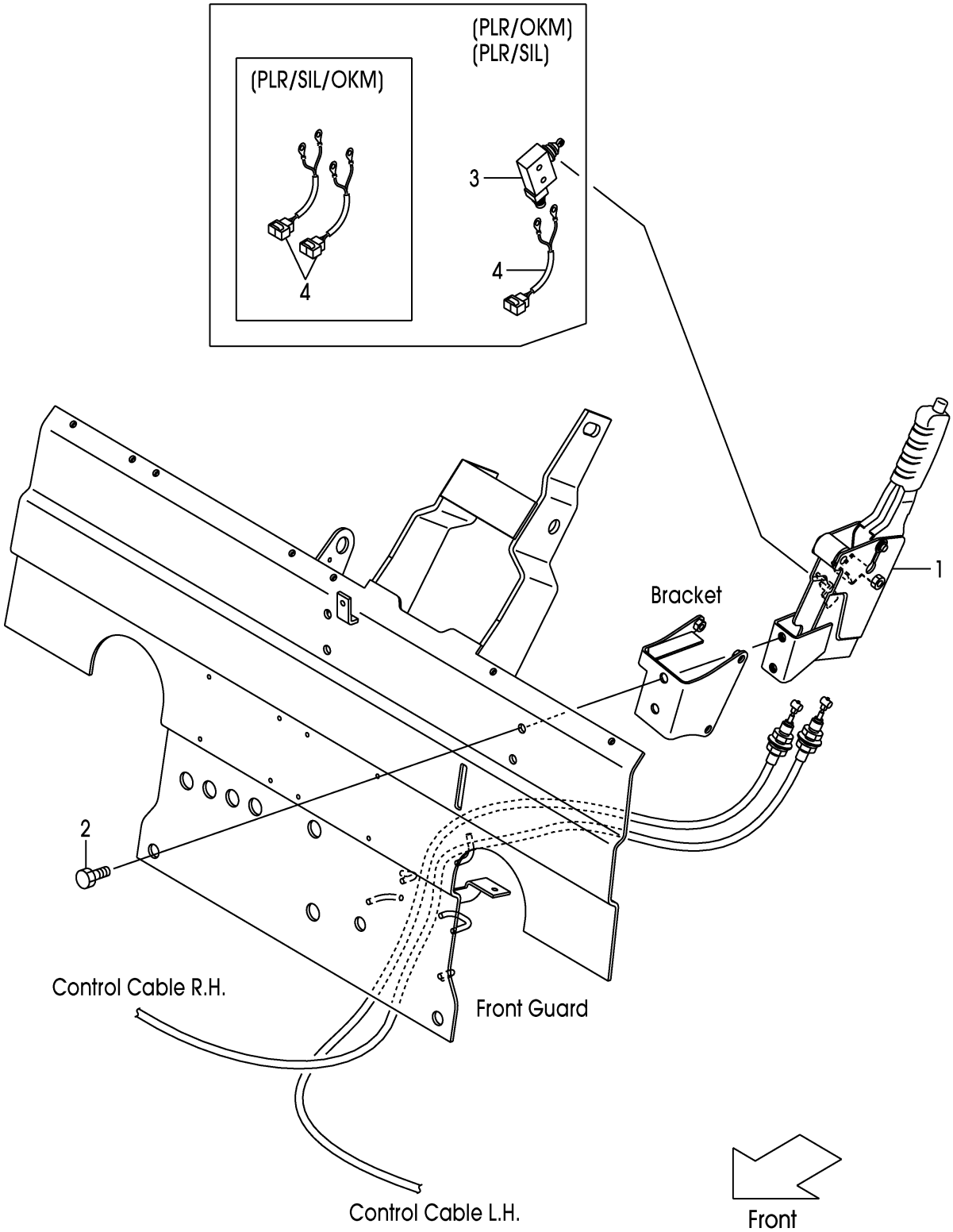

FIG.119

(F7Z25520)

A:FD20C3Z FD20T3Z FD25C3Z FD25T3Z

Item No	Part No.	Mark	Description		Req'd	Remarks : Serial No.
1	22N55-50201		LEVER,PARKING-BRAKE	ﾚﾊﾞｰ	1	[PLR]
-	22N55-50101		LEVER,PARKING-BRAKE	ﾚﾊﾞｰ	1	[PLR/OKM][PLR/SIL]
						[PLR/SIL/OKM]
2	216G6-43241		BOLT	ﾎﾞﾙﾄ	2	[PLR]
3	27912-62441		SWITCH,MICRO	ｽｲｯﾁ	1	[PLR/OKM][PLR/SIL]
						[PLR/SIL/OKM]
4	278M2-42061		WIRE-HARNESS,SWITCH	ﾜｲﾔﾊｰﾈｽ	1	[PLR/OKM][PLR/SIL]
-	278M2-42061		WIRE-HARNESS,SWITCH	ﾜｲﾔﾊｰﾈｽ	2	[PLR/SIL/OKM]

FIG.120 FRAME

(F7Z26110) フレーム

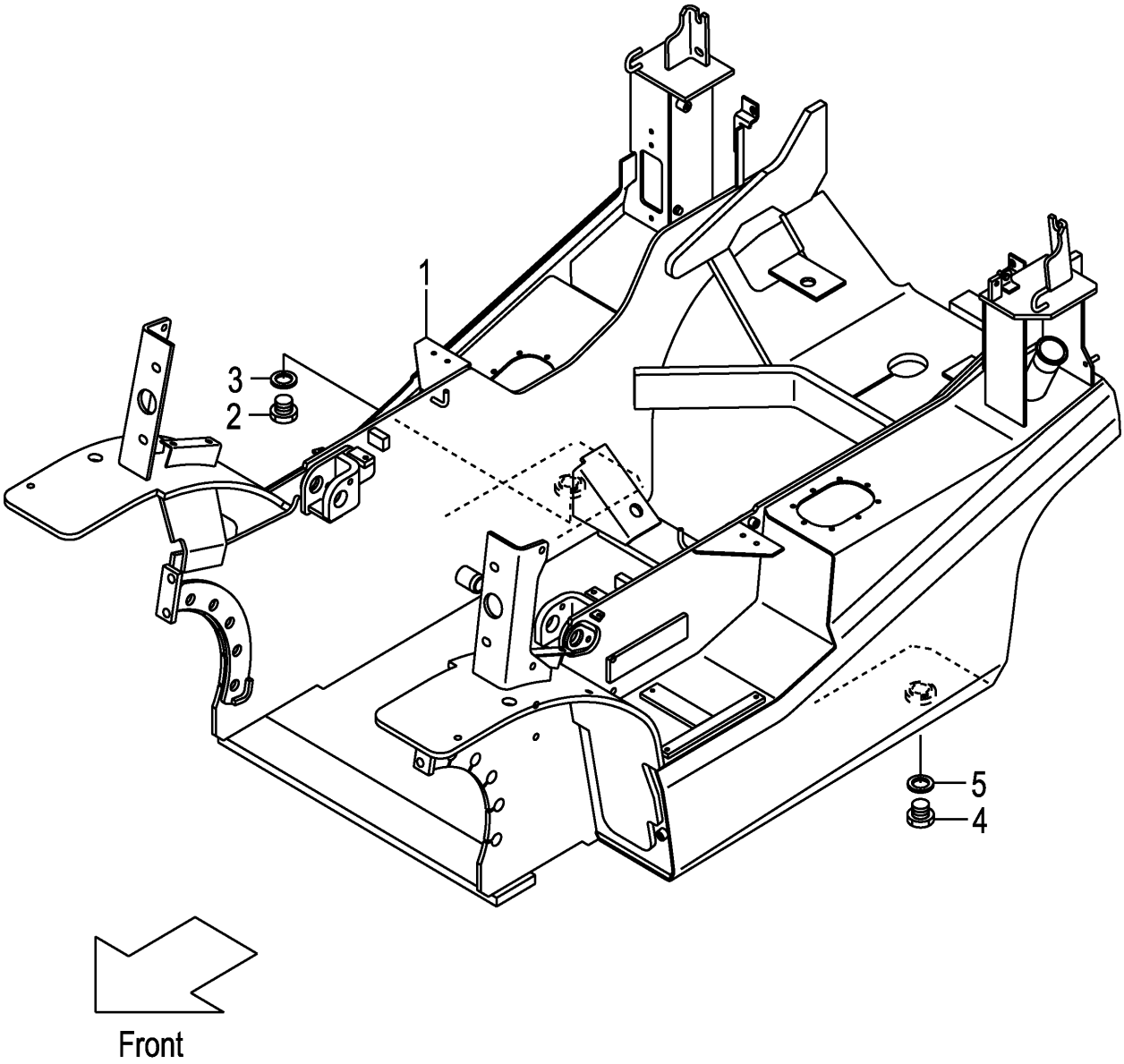

FIG.120

(F7Z26110)

A:FD20C3Z FD20T3Z FD25C3Z FD25T3Z

Item No	Part No.	Mark	Description		Req'd	Remarks : Serial No.
1	NO PART NO.	#	FRAME	ﾌﾚｰﾑ	1	
2	21237-52051		PLUG,DRAIN	ﾌﾟﾗｸﾞ	1	
3	21237-52062		PACKING	ﾊﾟｯｷﾝｸﾞ	1	
4	21237-52051		PLUG,DRAIN	ﾌﾟﾗｸﾞ	1	
5	21237-52062		PACKING	ﾊﾟｯｷﾝｸﾞ	1	

FIG.121 OIL TANK

(F7Z26120) オイルタンク

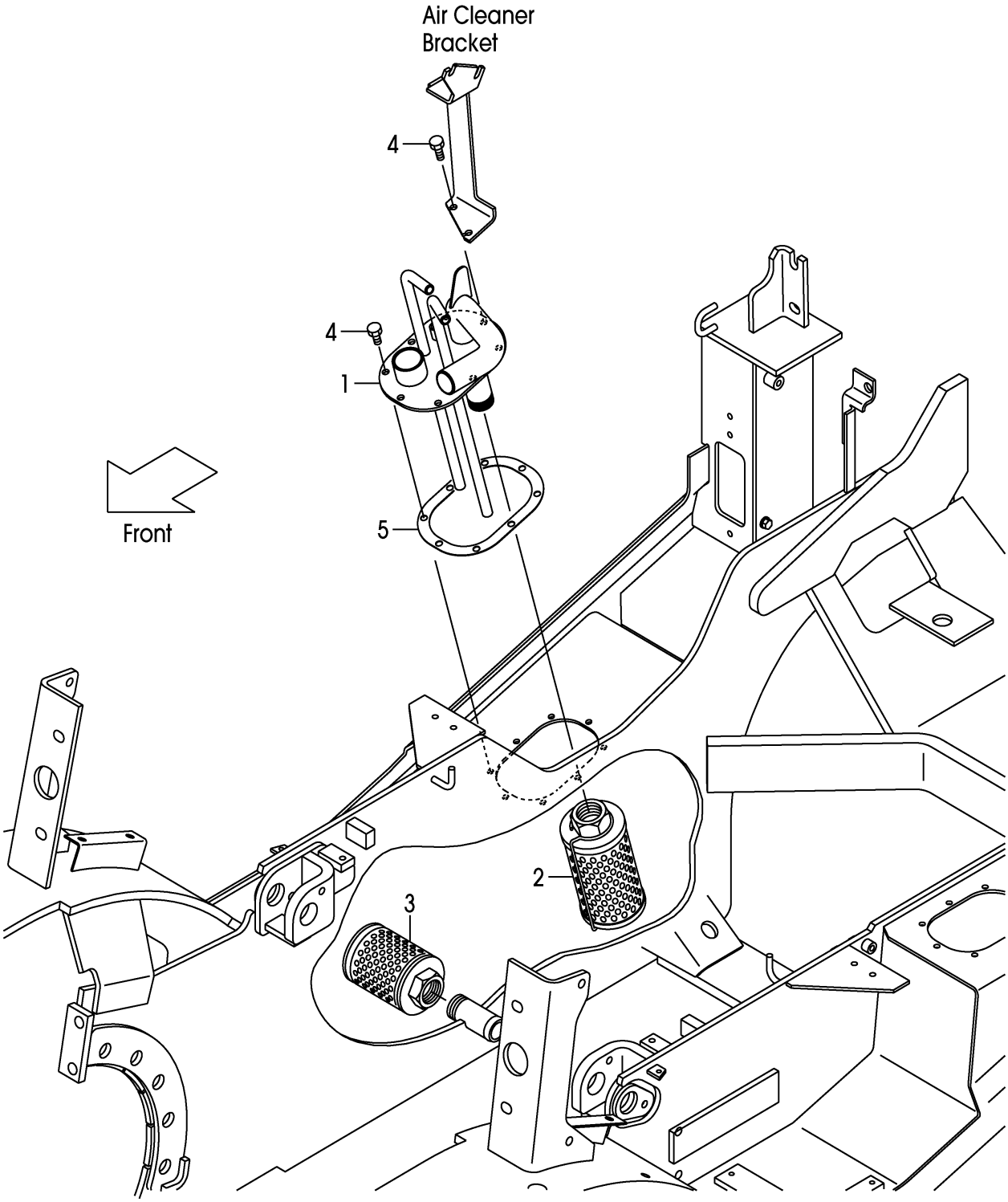

FIG.121

(F7Z26120)

A:FD20C3Z FD20T3Z FD25C3Z FD25T3Z

Item No	Part No.	Mark	Description		Req'd	Remarks : Serial No.
1	22N57-52302		PIPE,RETURN	ﾊﾟｲﾌﾟ	1	1-745
-	22N57-52303		PIPE,RETURN	ﾊﾟｲﾌﾟ	1	746-
2	271A7-52301		FILTER-ASSY,RETURN	ﾘﾀｰﾝﾌｨﾙﾀｱｯｾﾝ	1	
3	216G7-52051		FILTER,SUCTION	ﾌｲﾙﾀ	1	1-115
-	22N57-53001		FILTER,SUCTION	ﾌｲﾙﾀ	1	116-
4	229F2-22151		BOLT	ﾎﾞﾙﾄ	8	
5	22N52-22201		PACKING	ﾊﾟｯｷﾝｸﾞ	1	

FIG.122 OIL CAP & LEVEL

(F7Z26130) オイルキャップ&レベル

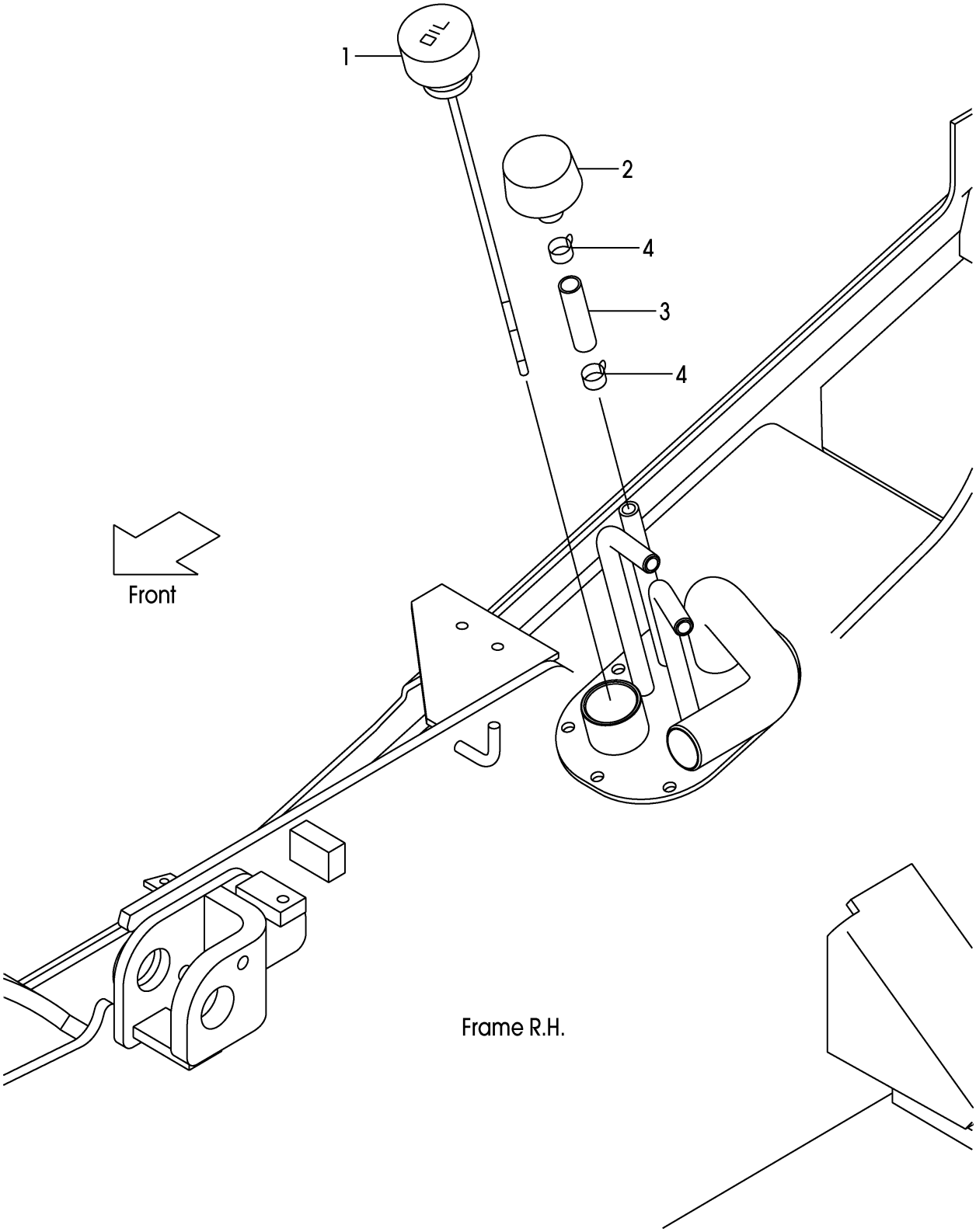

FIG.122

(F7Z26130)

A:FD20C3Z FD20T3Z FD25C3Z FD25T3Z:1-745

Item No	Part No.	Mark	Description		Req'd	Remarks : Serial No.
1	22N57-52102		CAP,OIL	ｷｬｯﾌﾟ	1	
2	216G7-52201		CAP,BREATHER	ｷｬｯﾌﾟ	1	
3	04710-04005		HOSE	ﾎｰｽ	1	
4	04914-00019		CLIP	ｸﾘｯﾌﾟ	2	

FIG.122A OIL CAP & LEVEL

(F7Z26131) オイルキャップ&レベル

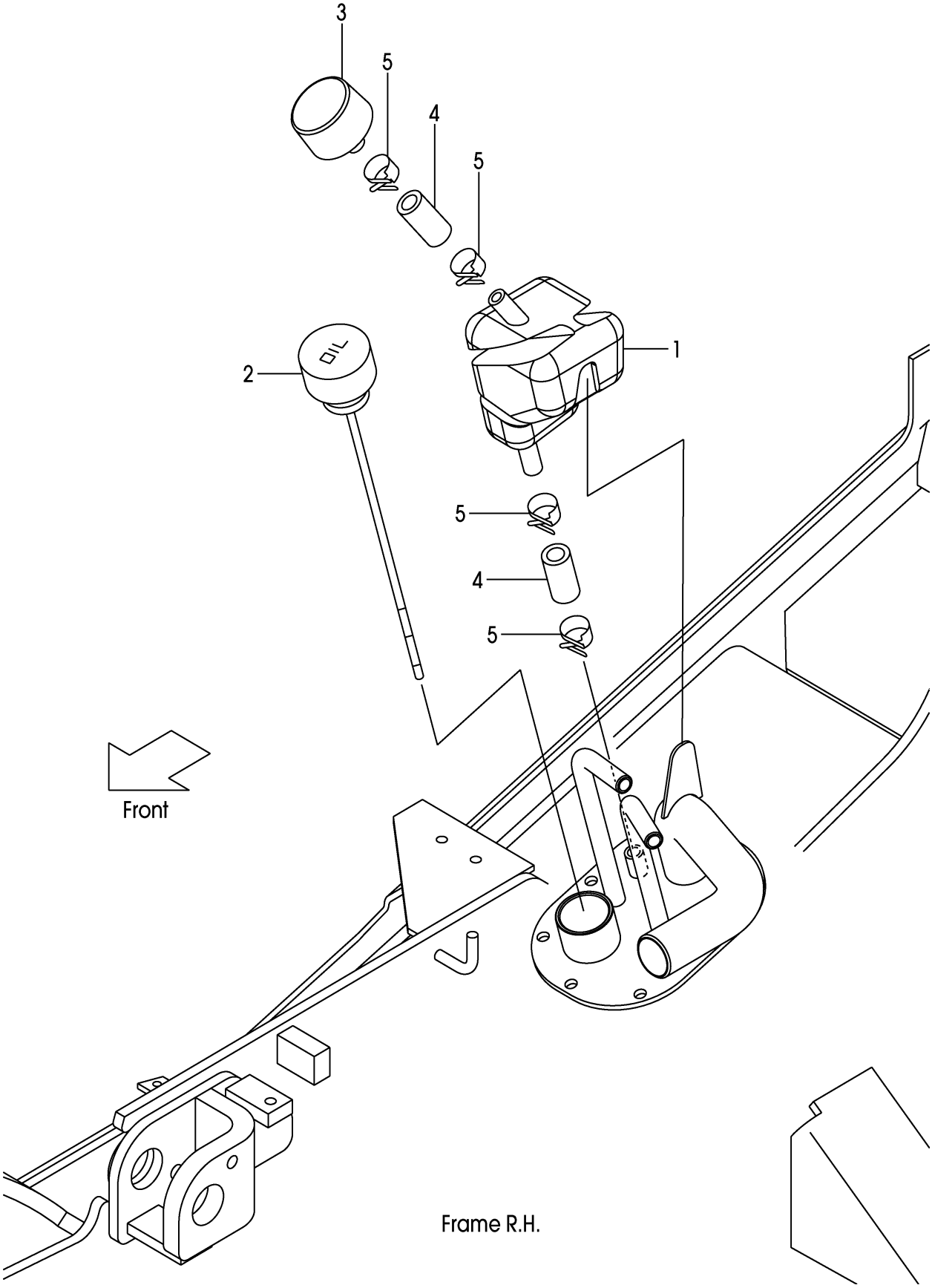

FIG.122A

(F7Z26131)

A:FD20C3Z FD20T3Z FD25C3Z FD25T3Z:746-

Item No	Part No.	Mark	Description		Req'd	Remarks : Serial No.
1	22N57-53101		TANK,SUB	ﾀﾝｸ	1	
2	22N57-52102		CAP,OIL	ｷｬｯﾌﾟ	1	
3	216G7-52201		CAP,BREATHER	ｷｬｯﾌﾟ	1	
4	04710-04004		HOSE	ﾎｰｽ	2	
5	04914-00019		CLIP	ｸﾘｯﾌﾟ	4	

FIG.123 FUEL TANK

(F7Z26150) フューエルタンク

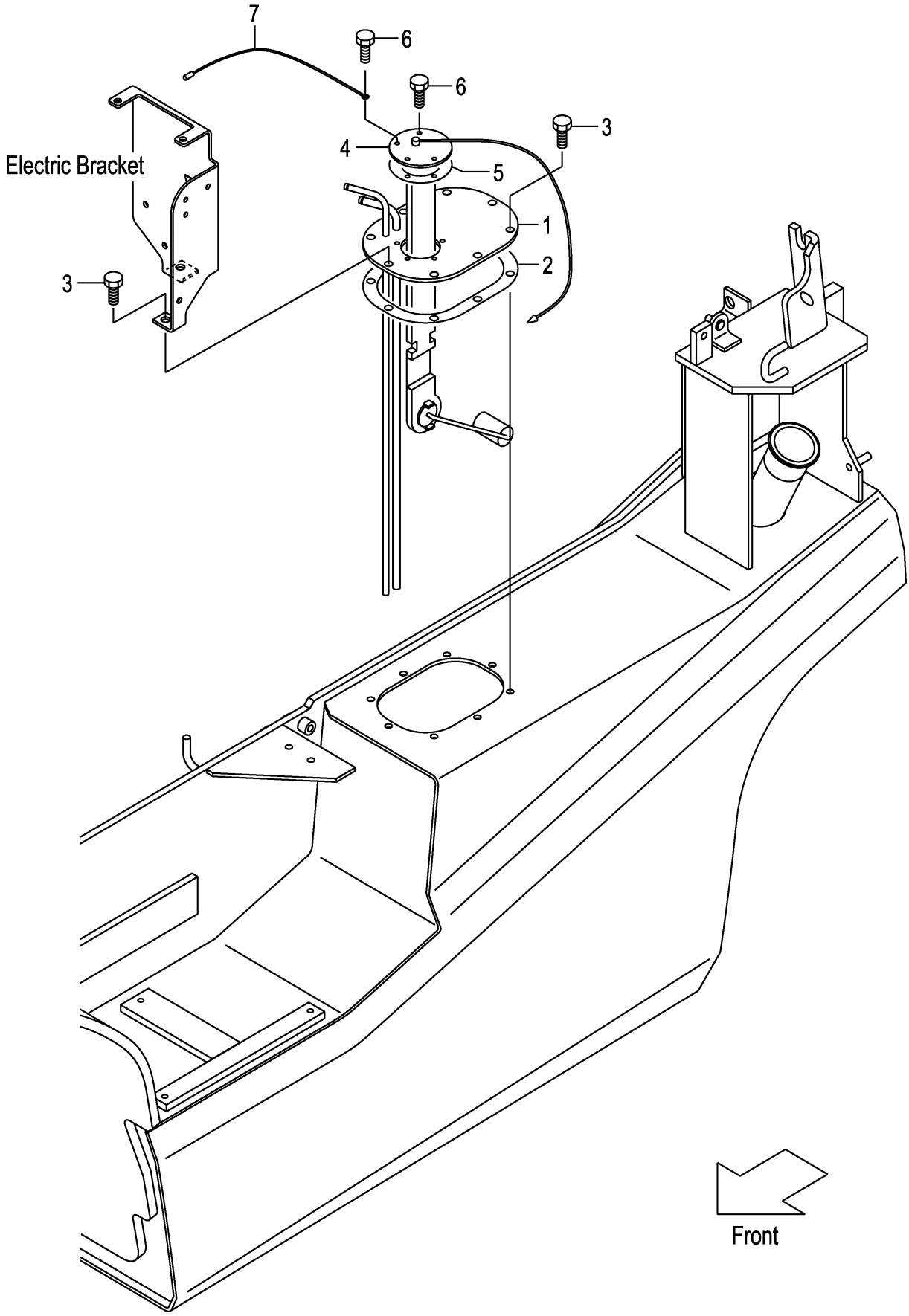

A:FD20C3Z FD20T3Z FD25C3Z FD25T3Z

Item No	Part No.	Mark	Description		Req'd	Remarks : Serial No.
1	22N52-22101		PLATE,FUEL-TOP	ﾌﾟﾚｰﾄ	1	
2	22N52-22201		PACKING	ﾊﾟｯｷﾝｸﾞ	1	
3	229F2-22151		BOLT	ﾎﾞﾙﾄ	8	
4	222A2-22061		GAUGE,FUEL	ｹﾞｰｼﾞ	1	
5	229F2-22071		GASKET	ｶﾞｽｹｯﾄ	1	
6	229F2-22171		BOLT	ﾎﾞﾙﾄ	5	
7	25592-42121		WIRE	ﾜｲﾔ	1	

FIG.124 BALANCE WEIGHT

(F7Z26310) ﾊﾞﾗﾝｽｳｴｲﾄ

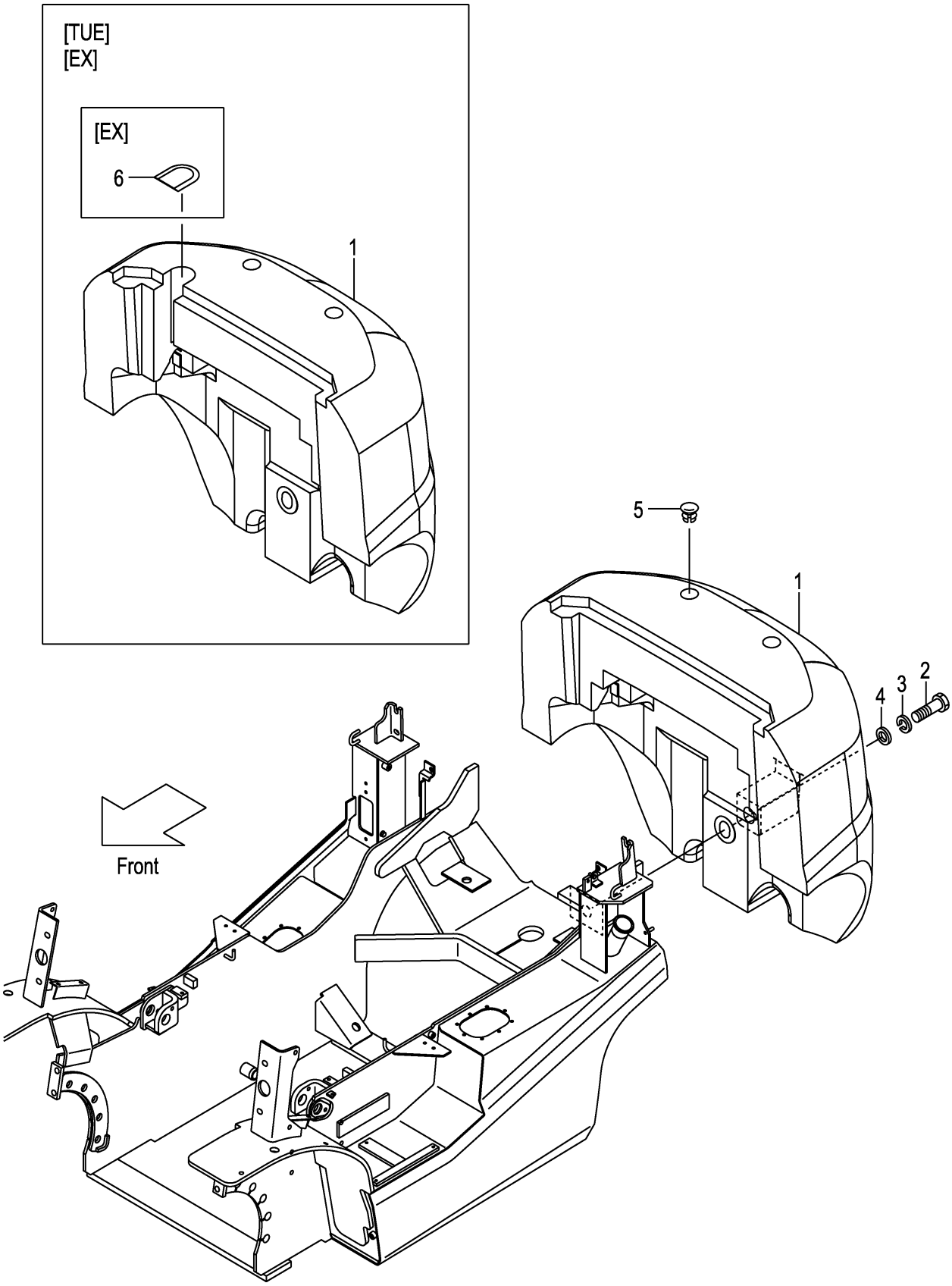

A:FD20C3Z FD20T3Z:1-207
B:FD25C3Z FD25T3Z:1-207

Item No	Part No.	Mark	Description		Req'd	Remarks : Serial No.
1	NO PART NO.	#	WEIGHT,BALANCE,2.0	ｳｴｲﾄ	1	A
-	NO PART NO.	#	WEIGHT,BALANCE,2.5	ｳｴｲﾄ	1	B
2	01110-30150		BOLT	ﾎﾞﾙﾄ	1	
3	02010-00030		WASHER	ﾜｯｼｬ	1	
4	234A6-32001		WASHER	ﾜｯｼｬ	1	
5	22N56-32041		CAP	ｷｬｯﾌﾟ	2	
6	516G2-72051		COVER	ｶﾊﾞｰ	1	[EX]

FIG.124A BALANCE WEIGHT

(F7Z26311) ﾊﾞﾗﾝｽｳｴｲﾄ

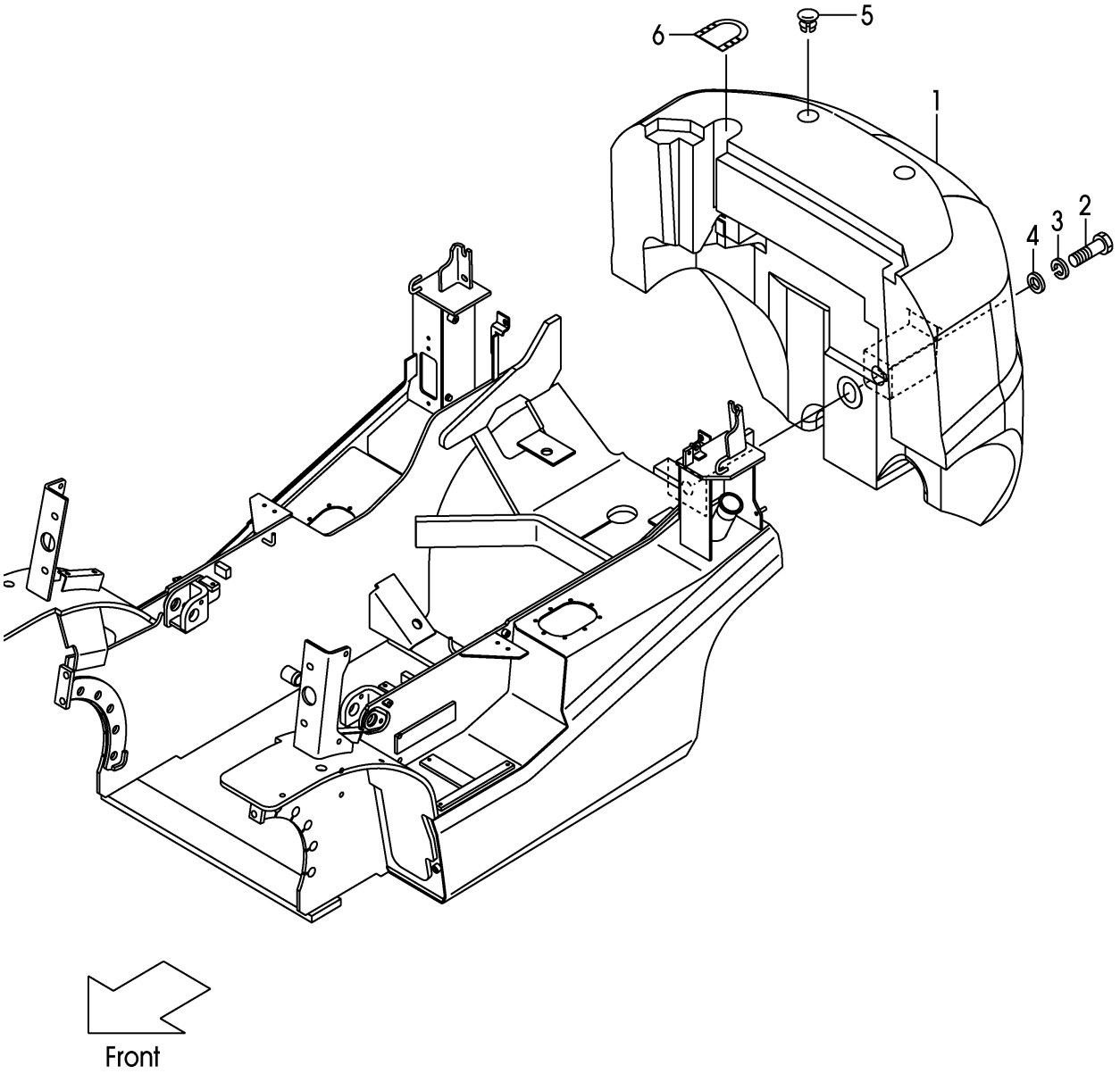

FIG.124A

A:FD20C3Z FD20T3Z:208-
B:FD25C3Z FD25T3Z:208-

(F7Z26311)

Item No	Part No.	Mark	Description		Req'd	Remarks : Serial No.
1	NO PART NO.	#	WEIGHT,BALANCE,2.0	ｳｴｲﾄ	1	A
-	NO PART NO.	#	WEIGHT,BALANCE,2.5	ｳｴｲﾄ	1	B
2	01110-30150		BOLT	ﾎﾞﾙﾄ	1	
3	02010-00030		WASHER	ﾜｯｼｬ	1	
4	234A6-32001		WASHER	ﾜｯｼｬ	1	
5	22N56-32041		CAP	ｷｬｯﾌﾟ	2	
-	229F6-32001		CAP	ｷｬｯﾌﾟ	2	[DLB]
6	22N56-32301		COVER	ｶﾊﾞｰ	1	(WITHOUT TUE)
-	52N59-72301		COVER	ｶﾊﾞｰ	1	[DLB](WITHOUT TUE/DLB)

FIG.125 BALANCE WEIGHT [HC]

(F7Z26320) ﾊﾞﾗﾝｽｳｴｲﾄ

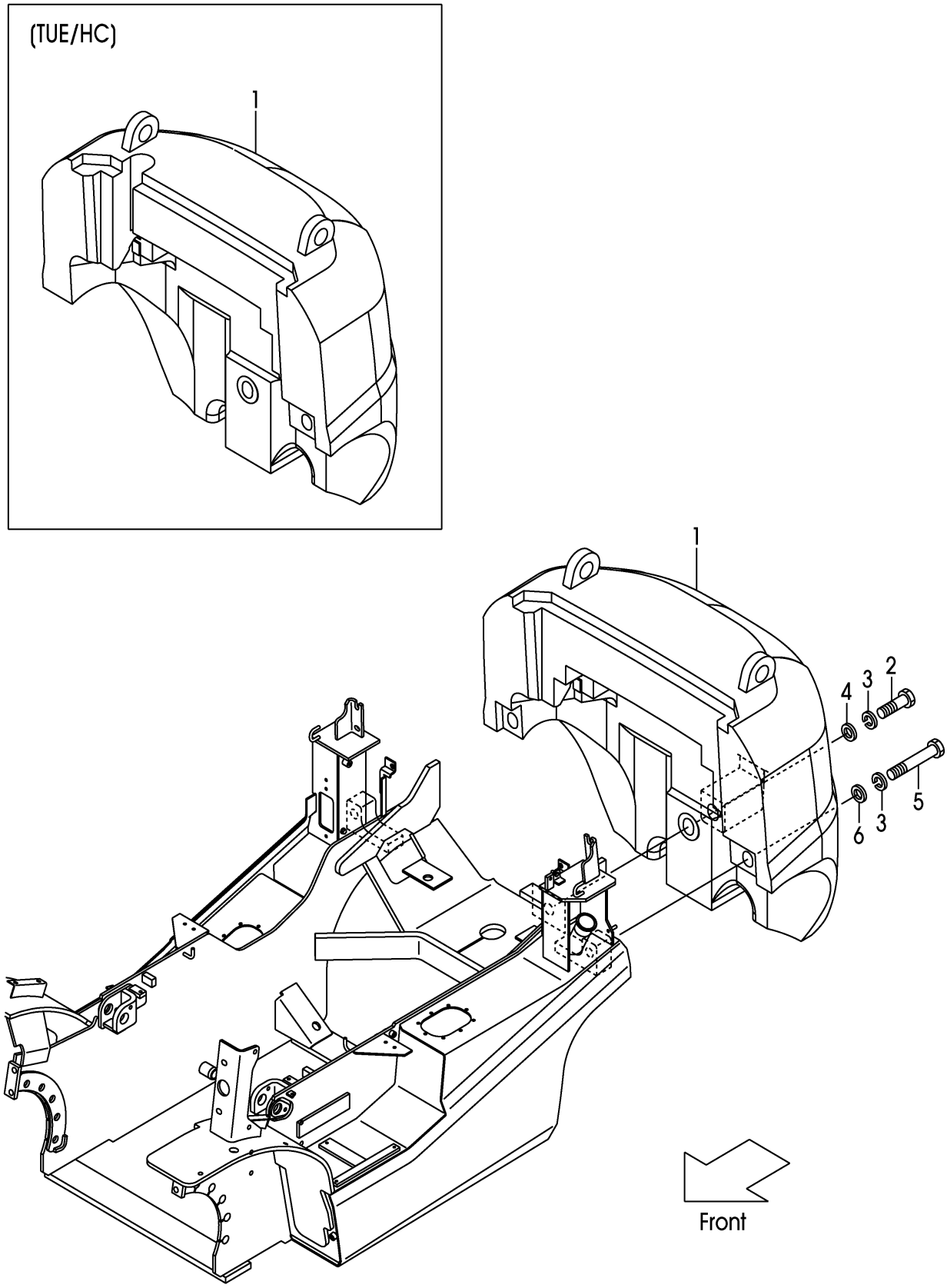

A:FD20C3Z FD20T3Z:1-207
B:FD25C3Z FD25T3Z:1-207

Item No	Part No.	Mark	Description		Req'd	Remarks : Serial No.
1	NO PART NO.	#	WEIGHT,BALANCE,2.0	ｳｴｲﾄ	1	A [HC]
-	NO PART NO.	#	WEIGHT,BALANCE,2.5	ｳｴｲﾄ	1	B [HC]
2	01110-30150		BOLT	ﾎﾞﾙﾄ	1	[HC]
3	02010-00030		WASHER	ﾜｯｼｬ	3	[HC]
4	234A6-32001		WASHER	ﾜｯｼｬ	1	[HC]
5	01113-30200		BOLT	ﾎﾞﾙﾄ	2	A [HC]
-	01113-30250		BOLT	ﾎﾞﾙﾄ	2	B [HC]
6	225R6-32001		WASHER	ﾜｯｼｬ	2	[HC]
7	225R9-12101	+	DECAL,HOOK-CAUTION	ﾃﾞｶﾙ	1	[HC]

FIG.125A BALANCE WEIGHT [HC]

(F7Z26321) ﾊﾞﾗﾝｽｳｴｲﾄ

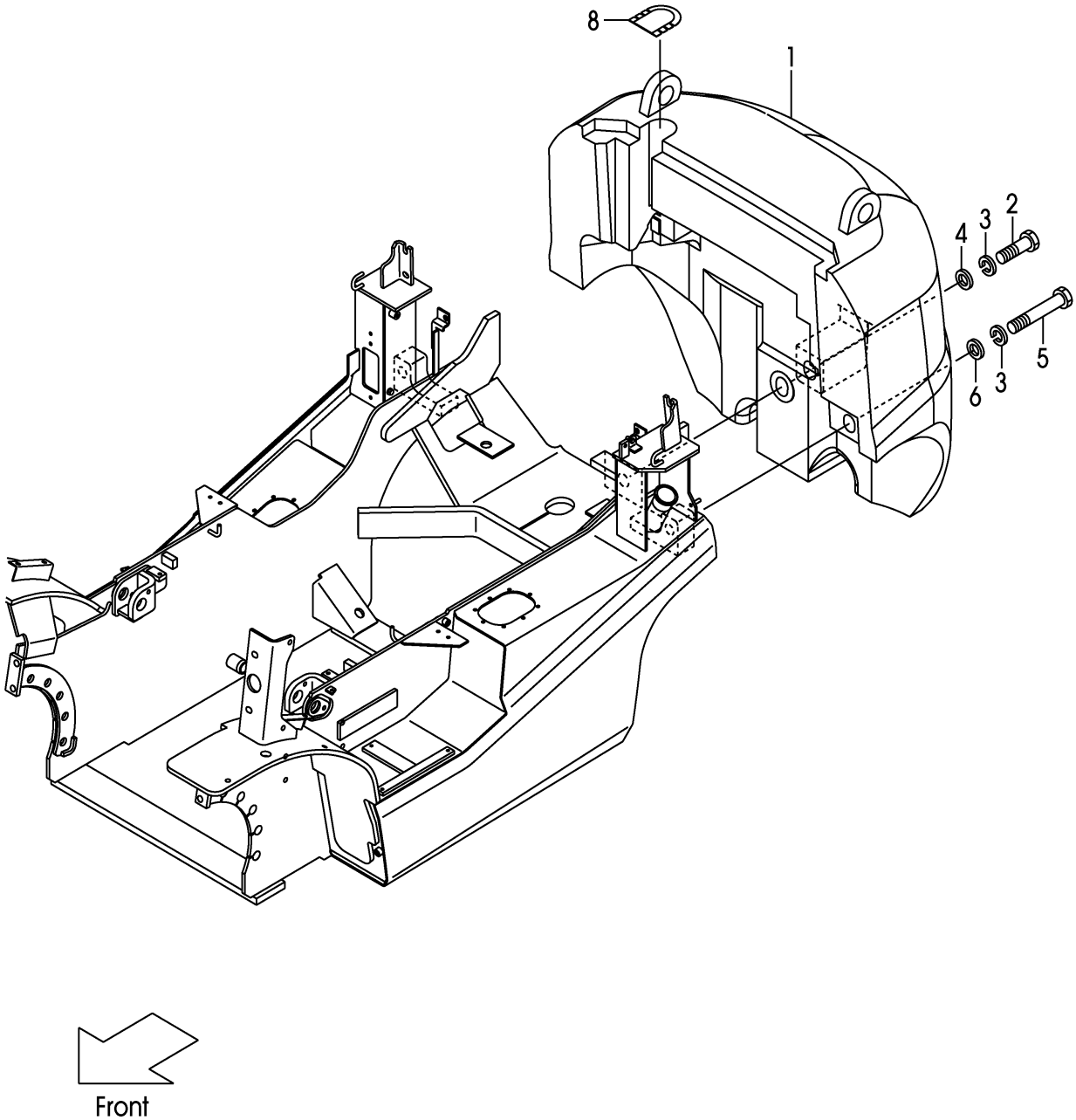

A:FD20C3Z FD20T3Z:208-
B:FD25C3Z FD25T3Z:208-

Item No	Part No.	Mark	Description		Req'd	Remarks : Serial No.
1	NO PART NO.	#	WEIGHT,BALANCE,2.0	ｳｴｲﾄ	1	A [HC]
-	NO PART NO.	#	WEIGHT,BALANCE,2.5	ｳｴｲﾄ	1	B [HC]
2	01110-30150		BOLT	ﾎﾞﾙﾄ	1	[HC]
3	02010-00030		WASHER	ﾜｯｼｬ	3	[HC]
4	234A6-32001		WASHER	ﾜｯｼｬ	1	[HC]
5	01113-30200		BOLT	ﾎﾞﾙﾄ	2	A [HC]
-	01113-30250		BOLT	ﾎﾞﾙﾄ	2	B [HC]
6	225R6-32001		WASHER	ﾜｯｼｬ	2	[HC]
7	225R9-12101	+	DECAL,HOOK-CAUTION	ﾃﾞｶﾙ	1	[HC]
8	22N56-32301		COVER	ｶﾊﾞｰ	1	[HC]
-	52N59-72301		COVER	ｶﾊﾞｰ	1	[HC/DLB]

FIG.126 FRONT GUARD

(F7Z26410) ﾌﾛﾝﾄｶﾞｰﾄﾞ

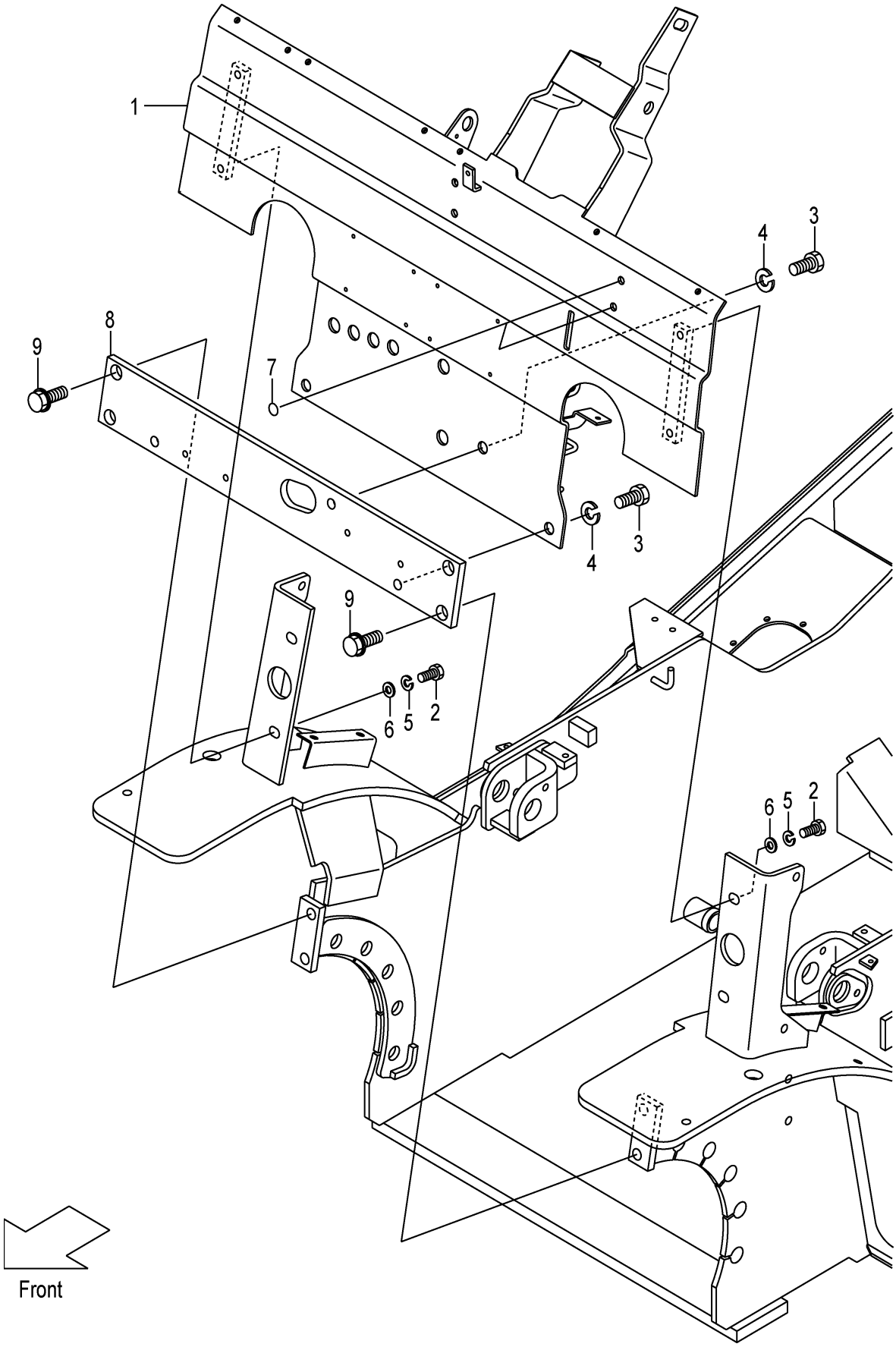

A:FD20C3Z FD20T3Z FD25C3Z FD25T3Z

Item No	Part No.	Mark	Description		Req'd	Remarks : Serial No.
1	22N56-40101		GUARD,FRONT	ｶﾞｰﾄﾞ	1	1-121
-	22N56-40102		GUARD,FRONT	ｶﾞｰﾄﾞ	1	122-
2	01186-12025		BOLT	ﾎﾞﾙﾄ	4	
-	01109-12025		BOLT,STAINLESS	ﾎﾞﾙﾄ	4	[FC]
3	01100-16020		BOLT	ﾎﾞﾙﾄ	3	
4	02010-00016		WASHER	ﾜｯｼｬ	3	
5	02013-00012		WASHER	ﾜｯｼｬ	4	[FC]
6	02001-00012		WASHER	ﾜｯｼｬ	4	[FC]
7	22N55-13181		SEAL,PANEL-COVER	ｼｰﾙ	2	
8	22N56-42041		PLATE,FRONT	ﾌﾟﾚｰﾄ	1	
9	216G6-43561		BOLT,FLANGE	ﾎﾞﾙﾄ	4	

FIG.127 BONNET

(F7Z26420) ﾎﾞﾝﾈｯﾄ

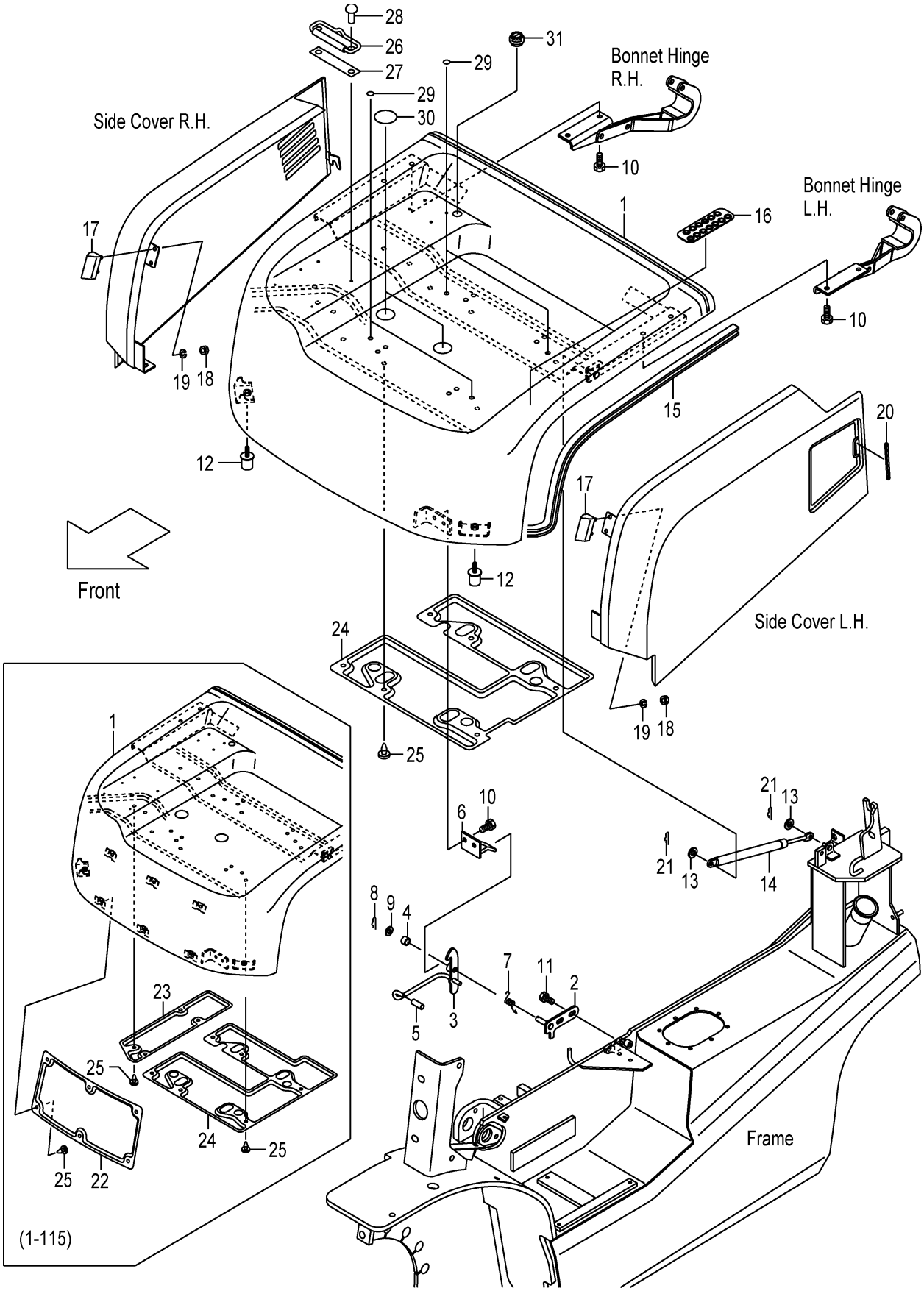

A:FD20C3Z FD20T3Z FD25C3Z FD25T3Z

Item No	Part No.	Mark	Description		Req'd	Remarks : Serial No.
1	22N56-40202		BONNET	ﾎﾞﾝﾈｯﾄ	1	1-115
-	22N56-40203		BONNET	ﾎﾞﾝﾈｯﾄ	1	116-
-	52N59-20411		BONNET	ﾎﾞﾝﾈｯﾄ	1	1-115
						[TOB]
-	52N59-20412		BONNET	ﾎﾞﾝﾈｯﾄ	1	116-
						[TOB]
A1	243C6-40021		CATCH-ASSY,BONNET	ﾎﾞﾝﾈｯﾄｷｬｯﾁｱｯｾﾝ	1	INC.2-9
2	NO PART NO.	#	BRACKET,BONNET-CATCH	ﾌﾞﾗｹｯﾄ	1	
3	NO PART NO.	#	LATCH	ﾗｯﾁ	1	
4	23655-22101		BUSHING	ﾌﾞｯｼﾝｸﾞ	1	
5	216G6-52291		CAP	ｷｬｯﾌﾟ	1	
6	216G6-42451		HOOK	ﾌｯｸ	1	
7	216G6-42481		SPRING	ｽﾌﾟﾘﾝｸﾞ	1	
8	216H5-42141		PIN,SNAP	ﾋﾟﾝ	1	
9	02000-00010		WASHER	ﾜｯｼｬ	1	
10	01183-08016		BOLT	ﾎﾞﾙﾄ	6	
11	01185-08016		BOLT	ﾎﾞﾙﾄ	2	
12	22N56-43051		RUBBER,STOPPER	ﾗﾊﾞｰ	2	
13	02000-00008		WASHER	ﾜｯｼｬ	2	
14	22N56-43041		SPRING,GAS	ｽﾌﾟﾘﾝｸﾞ	1	
15	22N56-40361		RUBBER,SEAL,BONNET	ﾗﾊﾞｰ	1	
16	22N56-43221		RUBBER	ﾗﾊﾞｰ	1	
17	22N56-43281		STOPPER,BONNET	ｽﾄｯﾊﾟ	2	
18	01400-00006		NUT	ﾅｯﾄ	4	
19	02010-00006		WASHER	ﾜｯｼｬ	4	
20	22N56-43271		RUBBER	ﾗﾊﾞｰ	1	
21	216H3-92171		PIN,SNAP	ﾋﾟﾝ	2	
22	22N56-40451		INSULATOR,A	ｲﾝｼｭﾚｰﾀ	1	1-115
23	22N56-40461		INSULATOR,B	ｲﾝｼｭﾚｰﾀ	1	1-115
24	22N56-40471		INSULATOR,C	ｲﾝｼｭﾚｰﾀ	1	
25	216G6-42541		CLIP	ｸﾘｯﾌﾟ	16	1-115
-	216G6-42541		CLIP	ｸﾘｯﾌﾟ	6	116-
26	25599-32001		BINDER	ﾊﾞｲﾝﾀﾞ	1	
27	25599-32021		SHEET,BINDER	ｼｰﾄ	1	
28	22256-42001		RIVET	ﾘﾍﾞｯﾄ	2	
29	22N56-43531		SEAL,PANEL-COVER	ｼｰﾙ	6	
30	22N56-43541		SEAT,BONNET	ｼｰﾄ	2	
31	27662-62711		GROMMET	ｸﾞﾛﾒｯﾄ	1	

FIG.128 RADIATOR COVER

(F7Z26430) ﾗｼﾞｴｰﾀｶﾊﾞｰ

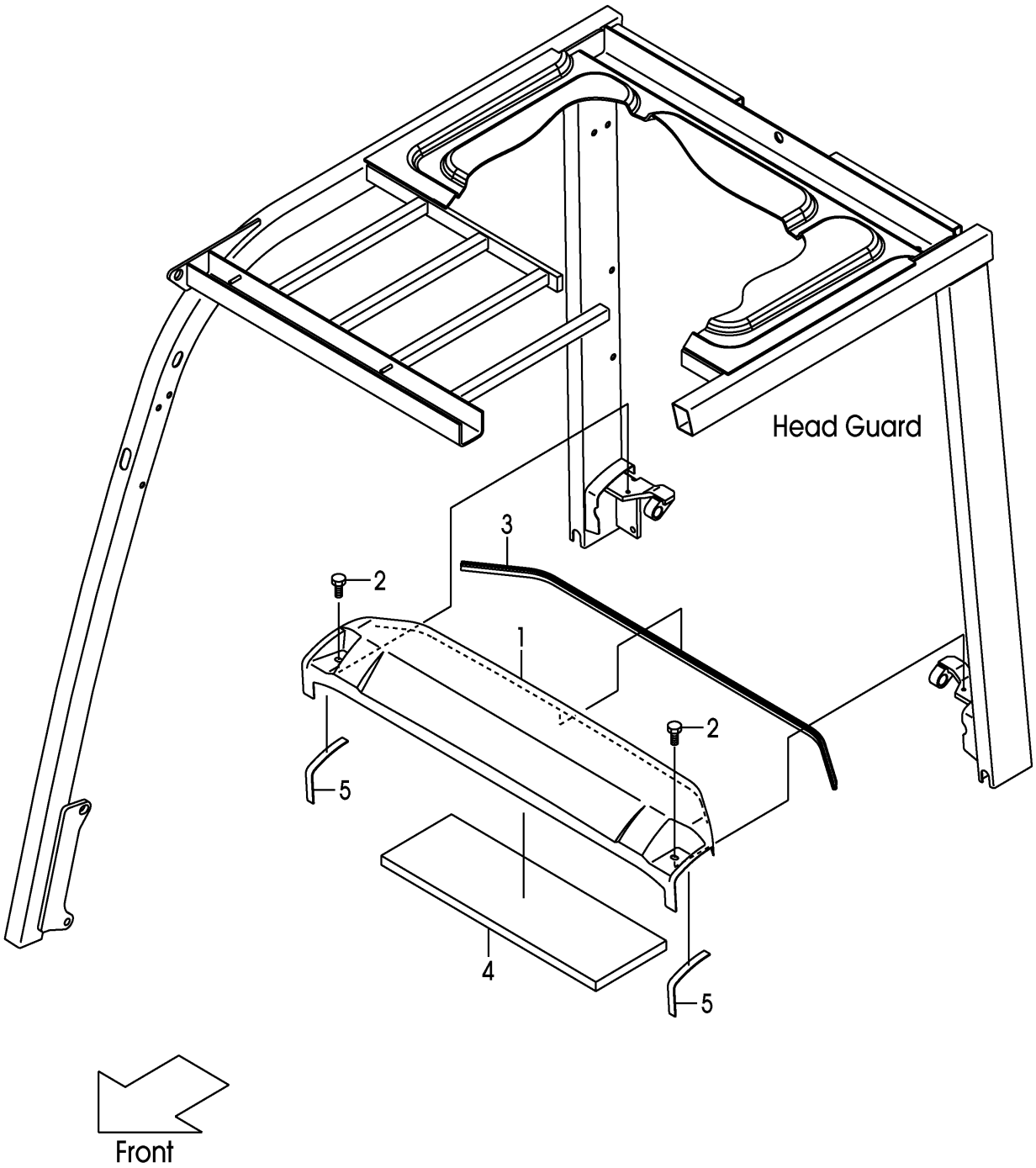

FIG.128

(F7Z26430)

A:FD20C3Z FD20T3Z FD25C3Z FD25T3Z

Item No	Part No.	Mark	Description		Req'd	Remarks : Serial No.
1	22N56-40302		COVER,RADIATOR	ｶﾊﾞｰ	1	
-	52N55-40211		COVER,RADIATOR	ｶﾊﾞｰ	1	[AW061]
2	01181-08016		BOLT	ﾎﾞﾙﾄ	2	
3	22N56-40371		SEAL,RUBBER	ｼｰﾙ	1	
4	22N56-40401		RUBBER,RAD-COVER	ﾗﾊﾞｰ	1	
5	234A6-43121		RUBBER	ﾗﾊﾞｰ	2	

FIG.129 BONNET HINGE

(F7Z26440) ﾎﾞﾝﾈｯﾄﾋﾝｼﾞ

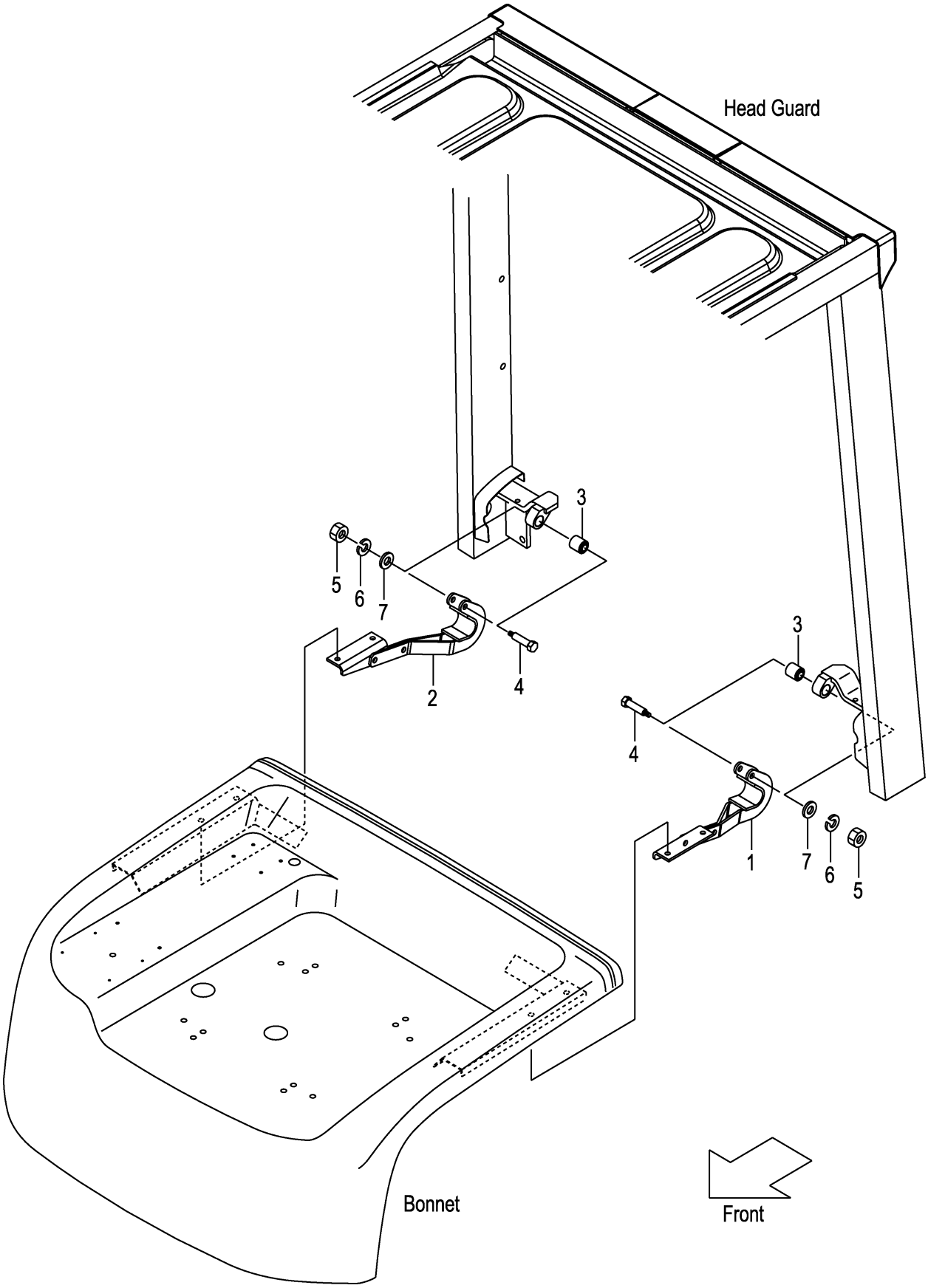

FIG.129

(F7Z26440)

A:FD20C3Z FD20T3Z FD25C3Z FD25T3Z

Item No	Part No.	Mark	Description		Req'd	Remarks : Serial No.
1	22N56-42602		HINGE,LH	ﾋﾝｼﾞ	1	
2	22N56-42612		HINGE,RH	ﾋﾝｼﾞ	1	
3	216G6-42921		BUSHING	ﾌﾞｯｼﾝｸﾞ	2	
4	216G6-42931		BOLT	ﾎﾞﾙﾄ	2	
5	01400-00006		NUT	ﾅｯﾄ	2	
6	02010-00006		WASHER	ﾜｯｼｬ	2	
7	02000-00006		WASHER	ﾜｯｼｬ	2	

FIG.130 FLOOR BOARD

(F7Z26450) フロアボード

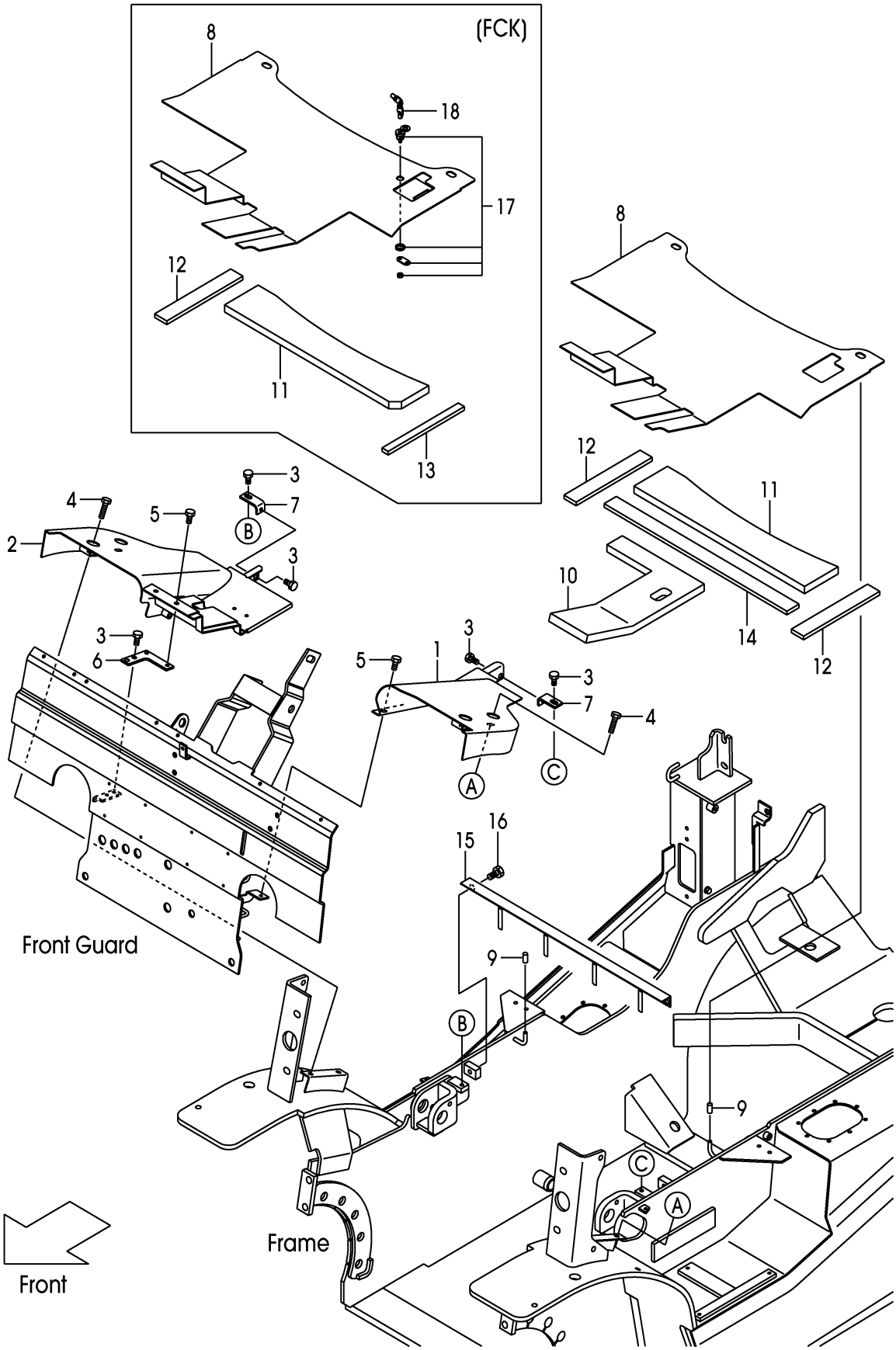

A:FD20C3Z FD20T3Z FD25C3Z FD25T3Z:1-112

Item No	Part No.	Mark	Description		Req'd	Remarks : Serial No.
1	22N56-50201		COVER,LH	ｶﾊﾞｰ	1	
2	22N56-50212		COVER,RH	ｶﾊﾞｰ	1	
3	01185-08016		BOLT	ﾎﾞﾙﾄ	6	
4	01185-08030		BOLT	ﾎﾞﾙﾄ	4	
5	273A6-42471		BOLT	ﾎﾞﾙﾄ	3	
6	22N56-52251		BRACKET	ﾌﾞﾗｹｯﾄ	1	
7	22N56-52241		BRACKET	ﾌﾞﾗｹｯﾄ	2	
8	22N56-52201		BOARD,FLOOR	ﾎﾞｰﾄﾞ	1	
-	52N58-10201		BOARD,FLOOR	ﾎﾞｰﾄﾞ	1	[FCK]
9	216G6-52291		CAP	ｷｬｯﾌﾟ	2	
10	22N56-52222		RUBBER,FLOOR-BOARD	ﾗﾊﾞｰ	1	
11	22N56-52231		RUBBER,FLOOR-BOARD	ﾗﾊﾞｰ	1	
-	52N58-12201		RUBBER,FLOOR-BOARD	ﾗﾊﾞｰ	1	[FCK]
12	22N56-52351		RUBBER	ﾗﾊﾞｰ	2	
-	22N56-52351		RUBBER	ﾗﾊﾞｰ	1	[FCK]
13	216G6-52161		RUBBER	ﾗﾊﾞｰ	1	[FCK]
14	22N56-52361		RUBBER	ﾗﾊﾞｰ	1	
15	22N56-52402		ANGLE	ｱﾝｸﾞﾙ	1	
16	01185-10016		BOLT	ﾎﾞﾙﾄ	2	
A1	52N58-10301		LOCK-ASSY,COIN	ｺｲﾝﾛｯｸｱｯｾﾝ	1	[FCK] INC.17,18
17	52N58-12501		CYL,KEY	ｼﾘﾝﾀﾞ	1	[FCK]
18	52N58-12511		KEY	ｷｰ	1	[FCK](1SET=2PCS)

FIG.131A FLOOR BOARD

(F7Z26451) フロアボード

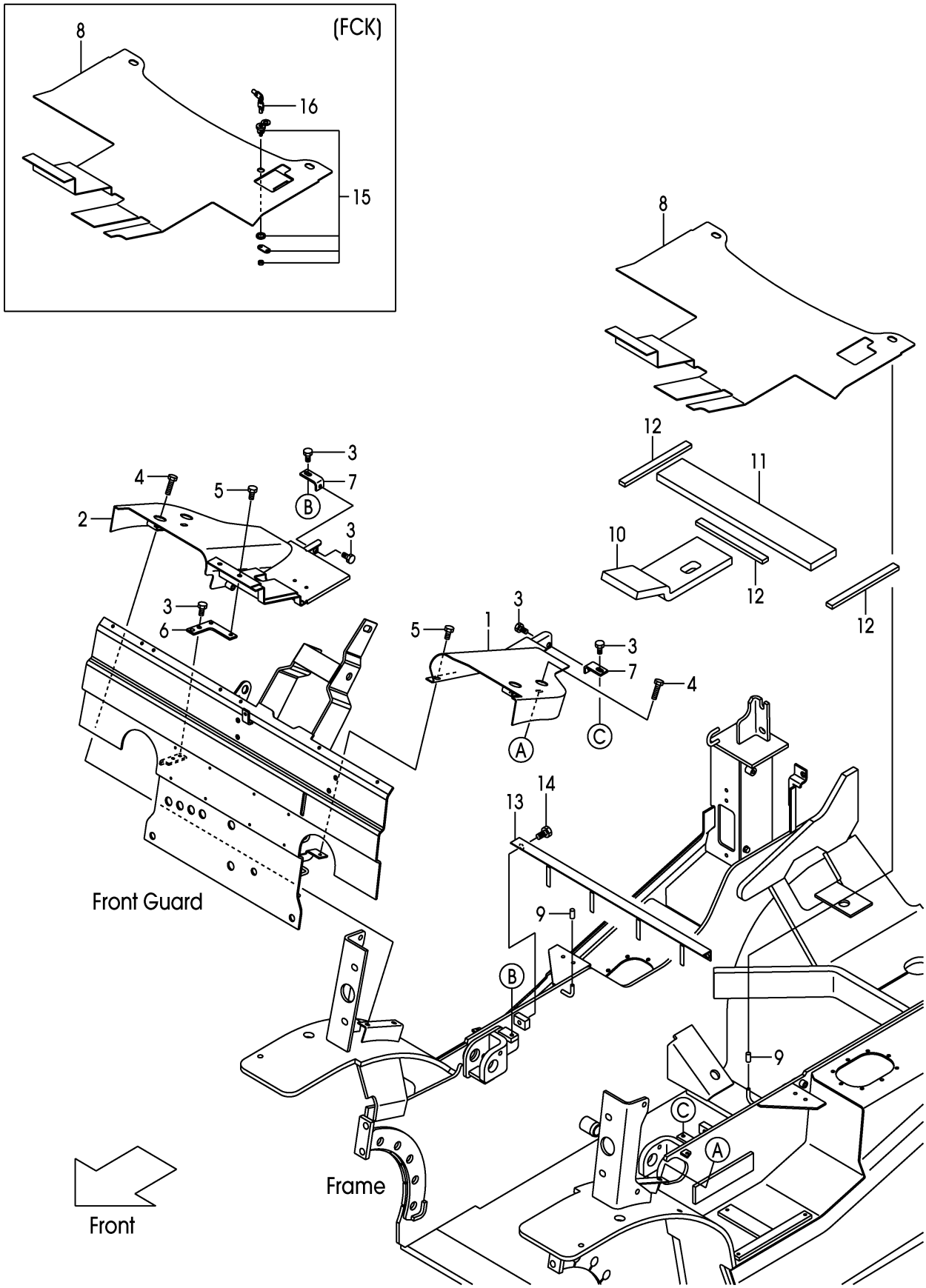

FIG.131A

(F7Z26451)

A:FD20C3Z FD20T3Z FD25C3Z FD25T3Z:113-127

Item No	Part No.	Mark	Description		Req'd	Remarks : Serial No.
1	22N56-50201		COVER,LH	ｶﾊﾞｰ	1	
2	22N56-50212		COVER,RH	ｶﾊﾞｰ	1	
3	01185-08016		BOLT	ﾎﾞﾙﾄ	6	
4	01185-08030		BOLT	ﾎﾞﾙﾄ	4	
5	273A6-42471		BOLT	ﾎﾞﾙﾄ	3	
6	22N56-52251		BRACKET	ﾌﾞﾗｹｯﾄ	1	
7	22N56-52241		BRACKET	ﾌﾞﾗｹｯﾄ	2	
8	22N56-52201		BOARD,FLOOR	ﾎﾞｰﾄﾞ	1	
-	52N58-10201		BOARD,FLOOR	ﾎﾞｰﾄﾞ	1	[FCK]
9	216G6-52291		CAP	ｷｬｯﾌﾟ	2	
10	22N56-52222		RUBBER,FLOOR-BOARD	ﾗﾊﾞｰ	1	
11	22N56-52231		RUBBER,FLOOR-BOARD	ﾗﾊﾞｰ	1	
12	216G6-52161		RUBBER	ﾗﾊﾞｰ	3	
13	22N56-52402		ANGLE	ｱﾝｸﾞﾙ	1	
14	01185-10016		BOLT	ﾎﾞﾙﾄ	2	
A1	52N58-10301		LOCK-ASSY,COIN	ｺｲﾝﾛｯｸｱｯｾﾝ	1	[FCK] INC.15,16
15	52N58-12501		CYL,KEY	ｼﾘﾝﾀﾞ	1	[FCK]
16	52N58-12511		KEY	ｷｰ	1	[FCK](1SET=2PCS)

FIG.131B FLOOR BOARD

(F7Z26452) フロアボード

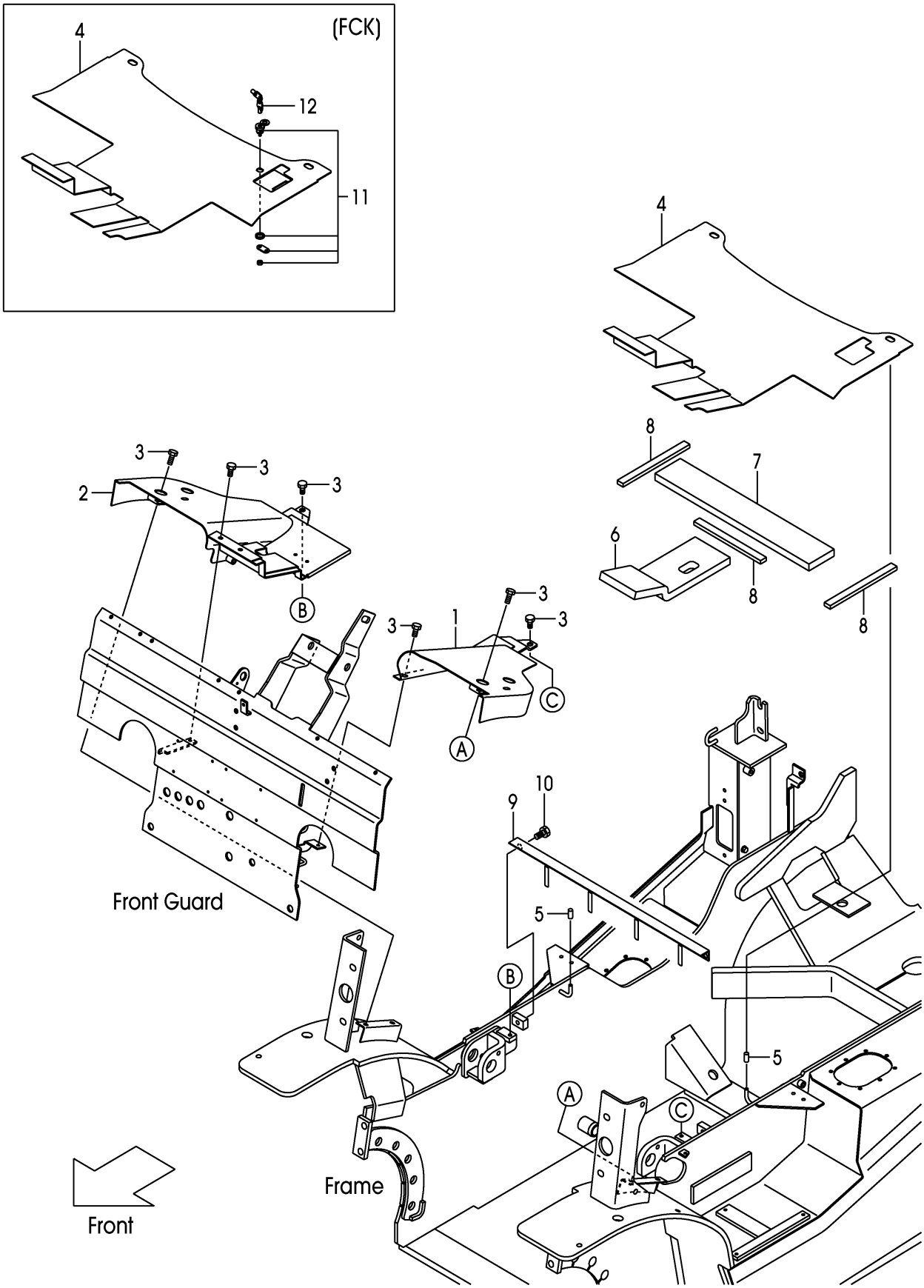

A:FD20C3Z FD20T3Z FD25C3Z FD25T3Z:128-

Item No	Part No.	Mark	Description		Req'd	Remarks : Serial No.
1	22N56-50201		COVER,LH	ｶﾊﾞｰ	1	
2	22N56-50212		COVER,RH	ｶﾊﾞｰ	1	
3	01185-08016		BOLT	ﾎﾞﾙﾄ	6	
4	22N56-52201		BOARD,FLOOR	ﾎﾞｰﾄﾞ	1	
-	52N58-10201		BOARD,FLOOR	ﾎﾞｰﾄﾞ	1	[FCK]
5	216G6-52291		CAP	ｷｬｯﾌﾟ	2	
6	22N56-52222		RUBBER,FLOOR-BOARD	ﾗﾊﾞｰ	1	
7	22N56-52231		RUBBER,FLOOR-BOARD	ﾗﾊﾞｰ	1	
8	216G6-52161		RUBBER	ﾗﾊﾞｰ	3	
9	22N56-52402		ANGLE	ｱﾝｸﾞﾙ	1	
10	01185-10016		BOLT	ﾎﾞﾙﾄ	2	
A1	52N58-10301		LOCK-ASSY,COIN	ｺｲﾝﾛｯｸｱｯｾﾝ	1	[FCK] INC.11,12
11	52N58-12501		CYL,KEY	ｼﾘﾝﾀﾞ	1	[FCK]
12	52N58-12511		KEY	ｷｰ	1	[FCK](1SET=2PCS)

FIG.132 STEP & FLOOR MAT

(F7Z26460) ｽﾃｯﾌﾟ&ﾌﾛｱﾏｯﾄ

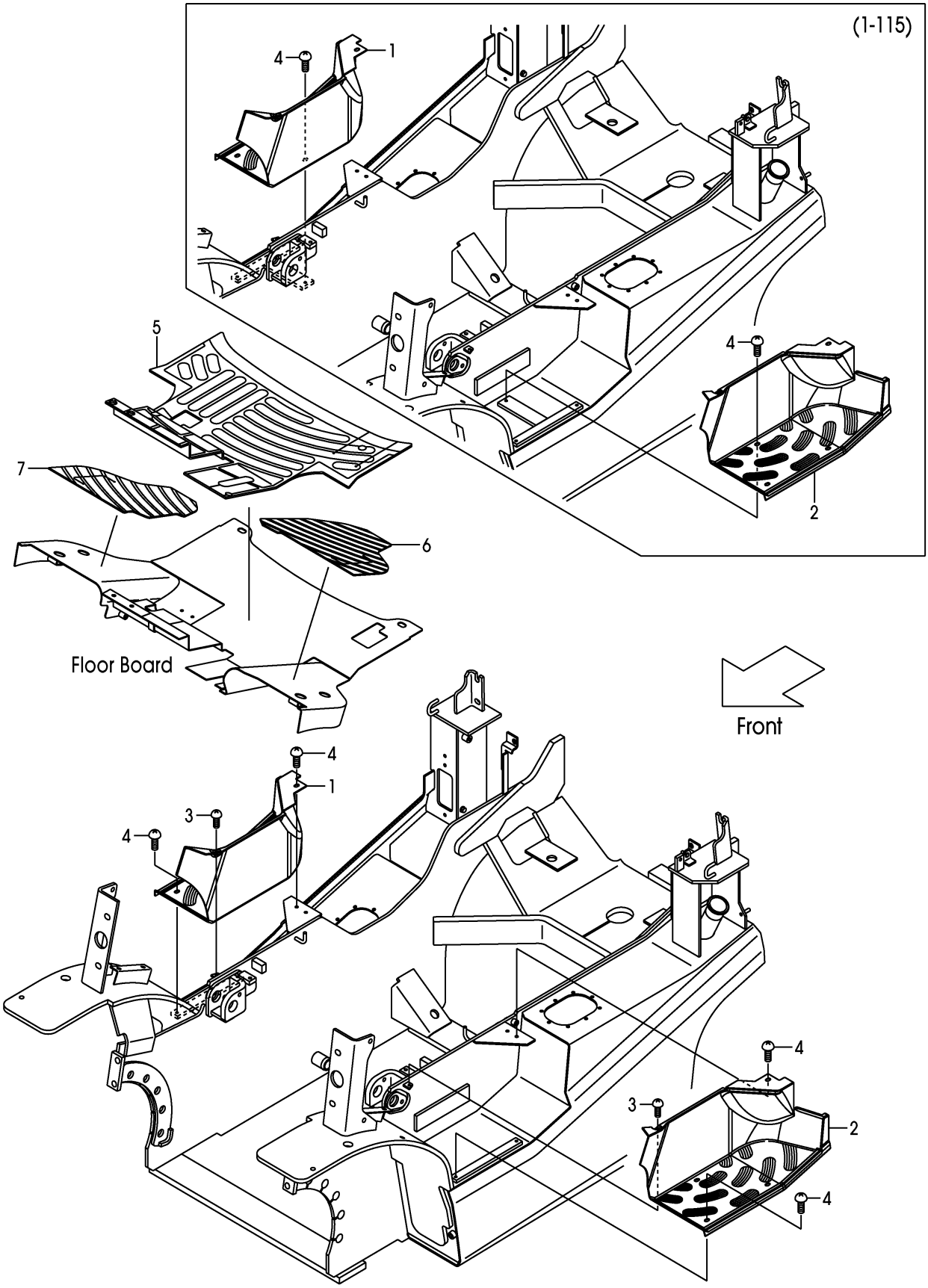

A:FD20C3Z FD20T3Z FD25C3Z FD25T3Z

Item No	Part No.	Mark	Description		Req'd	Remarks : Serial No.
1	22N56-42901		COVER,STEP,RH	ｶﾊﾞｰ	1	(WITHOUT HR)
-	52N55-42601		COVER,STEP,RH	ｶﾊﾞｰ	1	[AW061]
2	22N56-42911		COVER,STEP,LH	ｶﾊﾞｰ	1	
-	52N55-42611		COVER,STEP,LH	ｶﾊﾞｰ	1	[AW061]
3	214A6-42771		SCREW	ｽｸﾘｭ	2	
-	214A6-42771		SCREW	ｽｸﾘｭ	1	[HR]
4	278M6-42031		SCREW	ｽｸﾘｭ	8	1-115
-	278M6-42031		SCREW	ｽｸﾘｭ	6	116-
-	278M6-42031		SCREW	ｽｸﾘｭ	4	1-115
						[HR]
-	278M6-42031		SCREW	ｽｸﾘｭ	3	116-
						[HR]
5	22N56-52302		MAT,FLOOR	ﾏｯﾄ	1	
-	52N58-10311		MAT,FLOOR	ﾏｯﾄ	1	[FCK]
6	22N56-52311		MAT,FLOOR,LH	ﾏｯﾄ	1	
7	22N56-52321		MAT,FLOOR,RH	ﾏｯﾄ	1	

FIG.133 FRONT COVER (CLUTCH)

(F7Z26470) フロントカバー

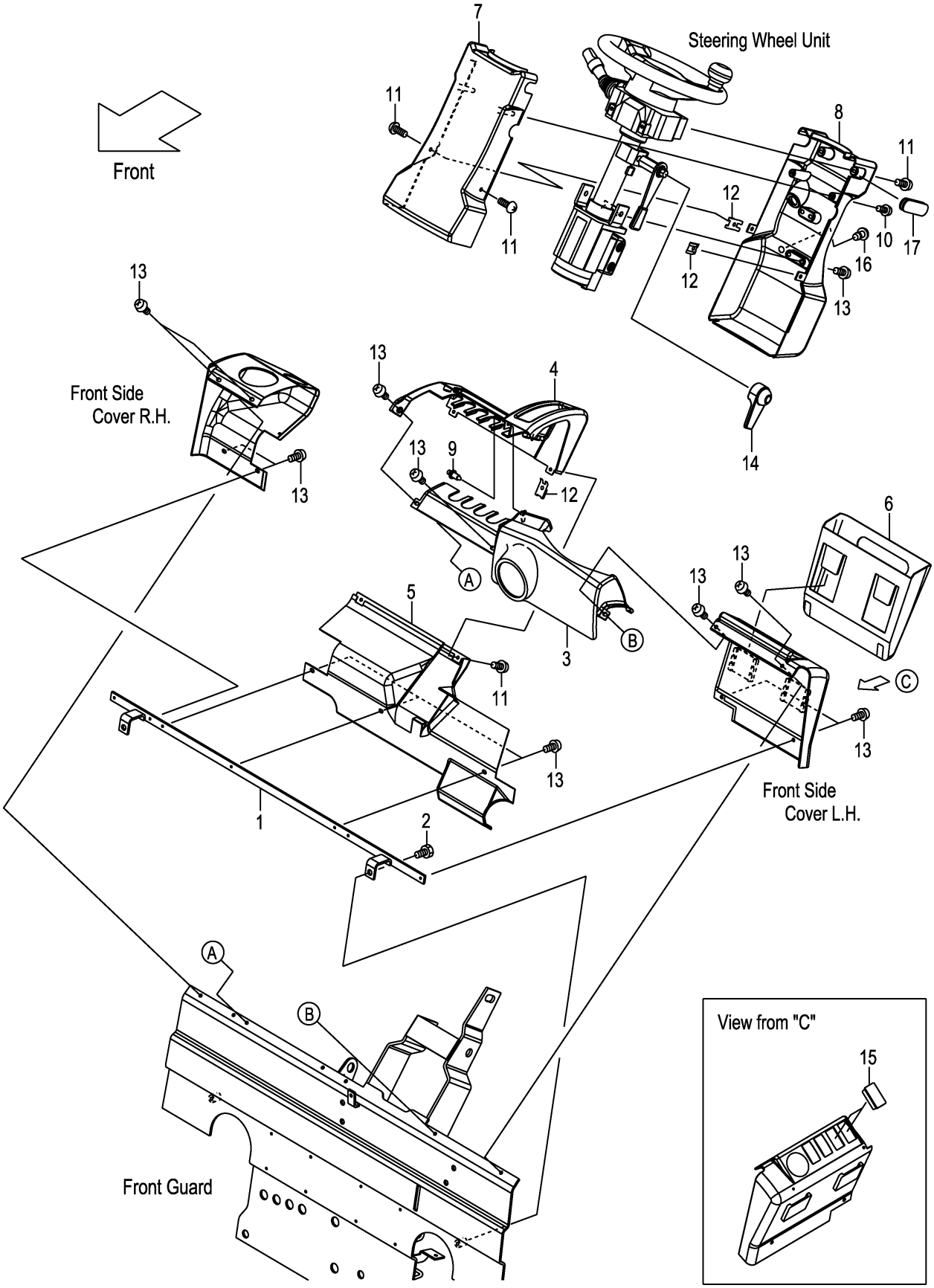

A:FD20C3Z FD25C3Z

Item No	Part No.	Mark	Description		Req'd	Remarks : Serial No.
1	22N56-42861		BRACKET,COVER	ﾌﾞﾗｹｯﾄ	1	
2	01185-08016		BOLT	ﾎﾞﾙﾄ	2	
3	22N56-42741		COVER,FRONT	ｶﾊﾞｰ	1	
4	22N56-42701		COVER,METER-PANEL	ｶﾊﾞｰ	1	
5	22N56-42731		COVER,LOWER	ｶﾊﾞｰ	1	
6	22N56-42751		POCKET,BINDER	ﾎﾟｹｯﾄ	1	
7	22N54-12321		COVER,HANDLE,FRONT	ｶﾊﾞｰ	1	
8	22N54-12311		COVER,HANDLE,REAR	ｶﾊﾞｰ	1	
-	52N57-72001		COVER,HANDLE,REAR	ｶﾊﾞｰ	1	[SWD]
9	22N56-42791		RIVET,PUSH	ﾘﾍﾞｯﾄ	1	
10	222A2-42031		SCREW	ｽｸﾘｭ	2	
11	209K2-43001		SCREW	ｽｸﾘｭ	6	
12	281E6-42521		NUT,SPEED	ﾅｯﾄ	4	
13	225R6-42031		SCREW	ｽｸﾘｭ	15	
14	22N54-12201		COVER,TILT-LOCK	ｶﾊﾞｰ	1	
15	256T2-42121		CAP	ｷｬｯﾌﾟ	2	
16	281E6-42571		PLUG,HOLE	ﾌﾟﾗｸﾞ	1	
17	239A4-12541		GROMMET,HANDLE-COVER	ｸﾞﾛﾒｯﾄ	1	

FIG.134 FRONT COVER (TOR-CON)

(F7Z26480) フロントカバー

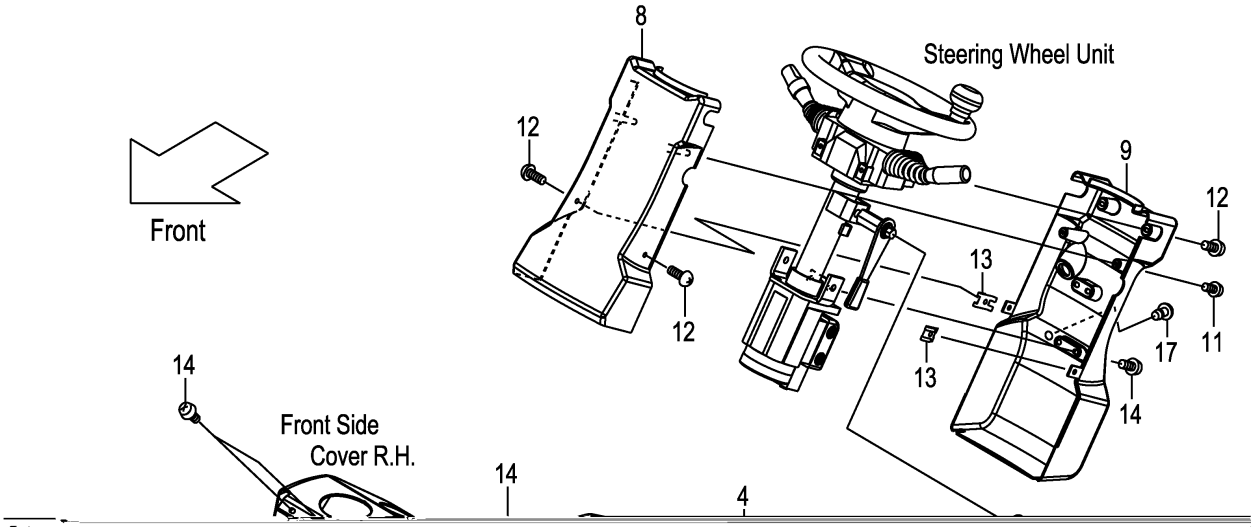

A:FD20T3Z FD25T3Z

Item No	Part No.	Mark	Description		Req'd	Remarks : Serial No.
1	22N56-42861		BRACKET,COVER	ﾌﾞﾗｹｯﾄ	1	
2	01185-08016		BOLT	ﾎﾞﾙﾄ	2	
3	22N56-42741		COVER,FRONT	ｶﾊﾞｰ	1	
4	22N56-42701		COVER,METER-PANEL	ｶﾊﾞｰ	1	
5	22N56-42731		COVER,LOWER	ｶﾊﾞｰ	1	
6	22N56-42751		POCKET,BINDER	ﾎﾟｹｯﾄ	1	
7	22N56-42771		COVER,CHANGE-LEVER	ｶﾊﾞｰ	1	
8	22N54-12321		COVER,HANDLE,FRONT	ｶﾊﾞｰ	1	
9	22N54-12311		COVER,HANDLE,REAR	ｶﾊﾞｰ	1	
-	52N57-72001		COVER,HANDLE,REAR	ｶﾊﾞｰ	1	[SWD]
10	22N56-42791		RIVET,PUSH	ﾘﾍﾞｯﾄ	1	
11	222A2-42031		SCREW	ｽｸﾘｭ	2	
12	209K2-43001		SCREW	ｽｸﾘｭ	6	
13	281E6-42521		NUT,SPEED	ﾅｯﾄ	4	
14	225R6-42031		SCREW	ｽｸﾘｭ	15	
15	22N54-12201		COVER,TILT-LOCK	ｶﾊﾞｰ	1	
16	256T2-42121		CAP	ｷｬｯﾌﾟ	2	
17	281E6-42571		PLUG,HOLE	ﾌﾟﾗｸﾞ	1	

FIG.135 SIDE COVER

(F7Z264A0) サイドカバー

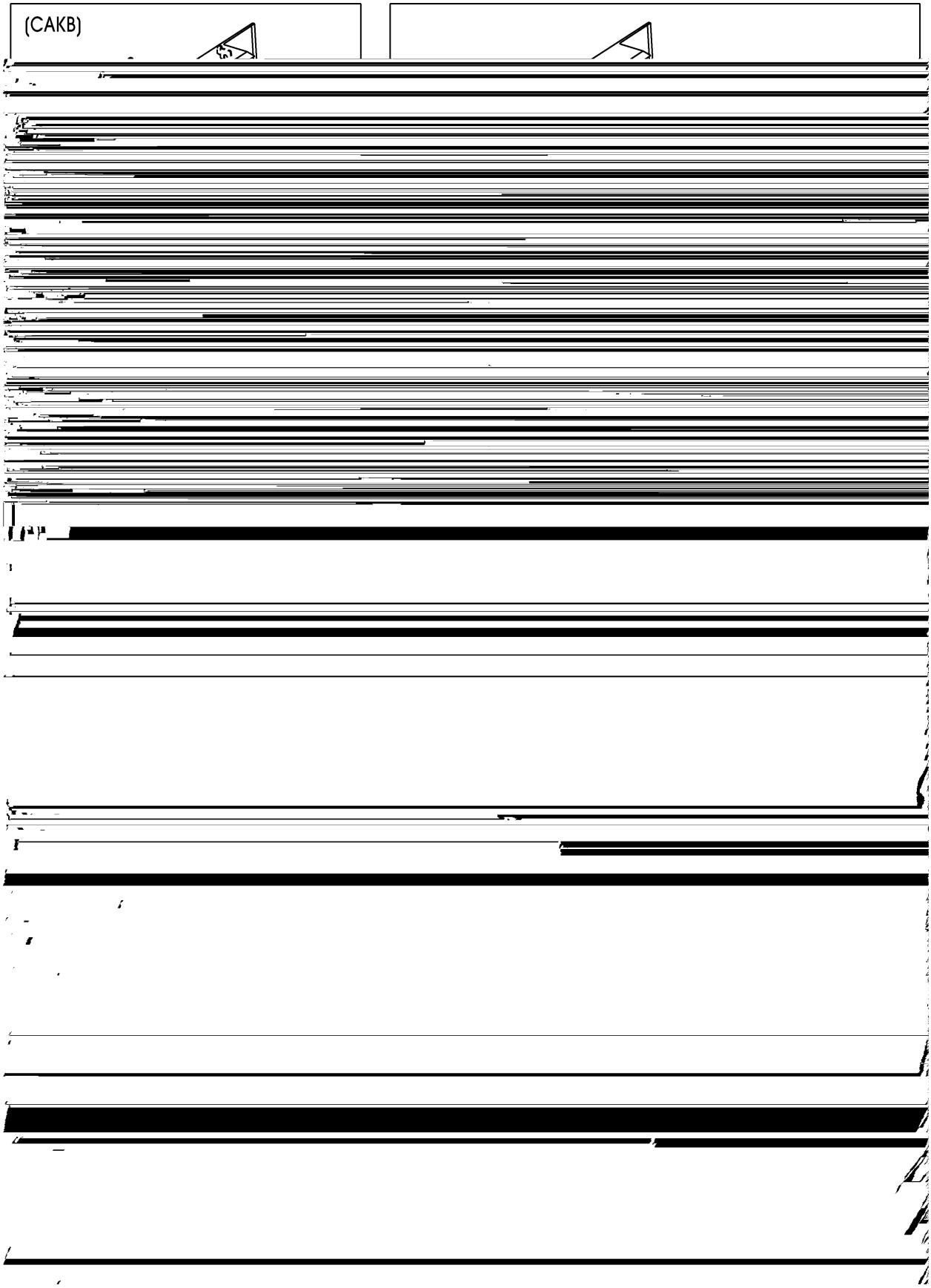

A:FD20C3Z FD20T3Z FD25C3Z FD25T3Z

Item No	Part No.	Mark	Description		Req'd	Remarks : Serial No.
1	22N56-40252		COVER,SIDE,LH	ｶﾊﾞｰ	1	
2	22N56-40262		COVER,SIDE,RH	ｶﾊﾞｰ	1	
-	52N50-90201		COVER,SIDE,RH	ｶﾊﾞｰ	1	[CAKB]
3	22N56-40272		COVER,FUEL-CAP	ｶﾊﾞｰ	1	
-	52N58-10221		COVER,FUEL-CAP	ｶﾊﾞｰ	1	[FCK]
4	02262-08045		PIN,CLEVIS	ﾋﾟﾝ	2	
5	216H3-92171		PIN,SNAP	ﾋﾟﾝ	2	
6	02000-00008		WASHER	ﾜｯｼｬ	2	
7	216G6-52291		CAP	ｷｬｯﾌﾟ	6	
8	22N56-43252		SPRING,LEAF	ｽﾌﾟﾘﾝｸﾞ	1	
9	01183-08012		BOLT	ﾎﾞﾙﾄ	1	
10	22N56-40411		RUBBER,FOAM,LH	ﾗﾊﾞｰ	1	
11	22N56-40421		RUBBER,FOAM,RH	ﾗﾊﾞｰ	1	
12	209P6-42831		EDGING,L=50	ｴｯｼﾞﾝｸﾞ	4	1-112
-	22N56-43481		RUBBER	ﾗﾊﾞｰ	4	113-
13	243C6-42821		EDGING,L=100	ｴｯｼﾞﾝｸﾞ	2	
14	524W3-83091		EDGING,L=230	ｴｯｼﾞﾝｸﾞ	1	[CAKB]
A1	52N58-10301		LOCK-ASSY,COIN	ｺｲﾝﾛｯｸｱｯｾﾝ	1	[FCK] INC.15,16
15	52N58-12501		CYL,KEY	ｼﾘﾝﾀﾞ	1	[FCK]
16	52N58-12511		KEY	ｷｰ	1	[FCK](1SET=2PCS)
17	01100-05016		BOLT	ﾎﾞﾙﾄ	1	[FCK]
18	01400-00005		NUT	ﾅｯﾄ	2	[FCK]

FIG.136 FRONT SIDE COVER

(F7Z264C0) フロントサイドカバー

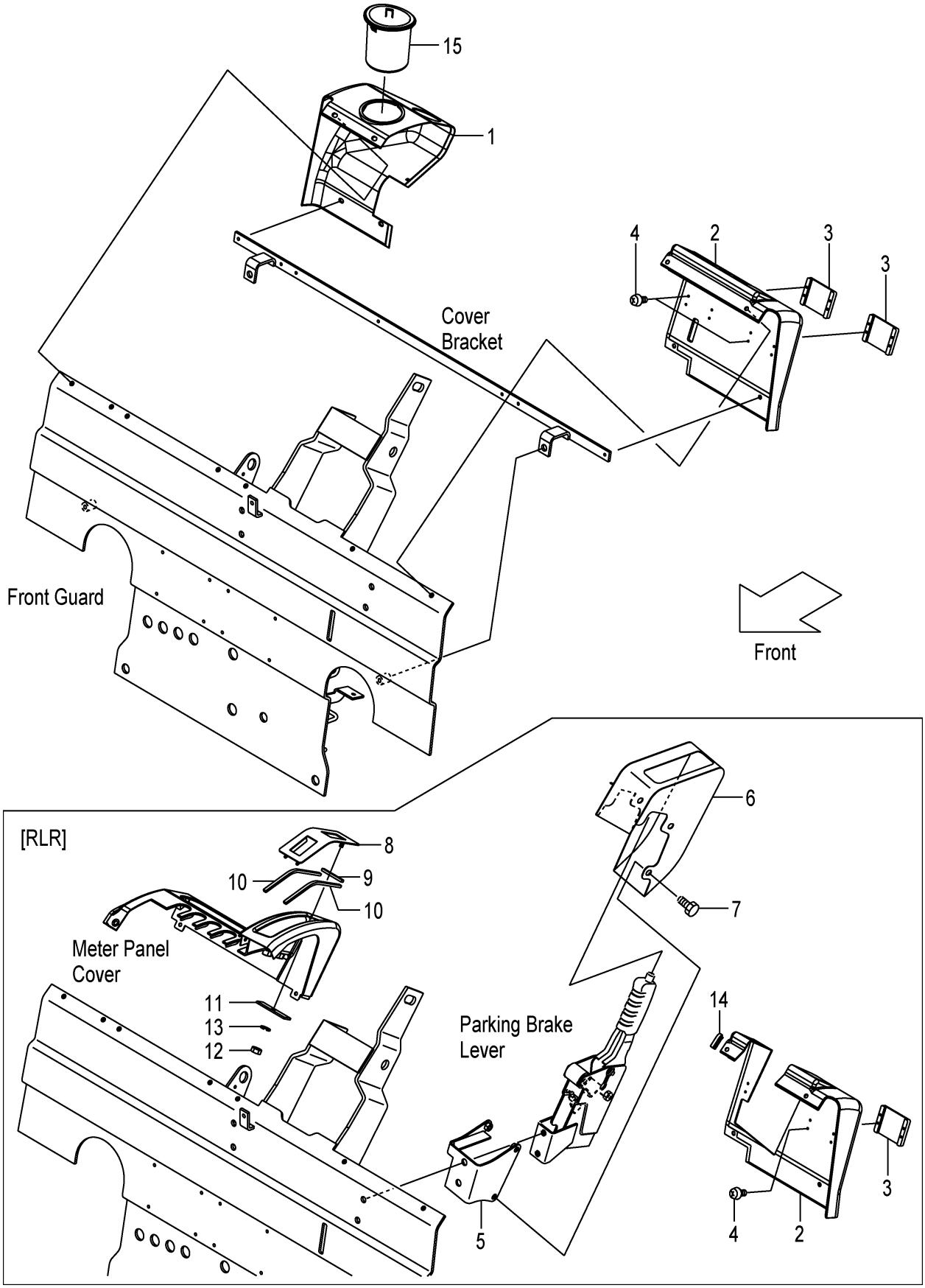

A:FD20C3Z FD20T3Z FD25C3Z FD25T3Z

Item No	Part No.	Mark	Description		Req'd	Remarks : Serial No.
1	22N56-42711		COVER,RH	ｶﾊﾞｰ	1	
-	52N58-82201		COVER,RH	ｶﾊﾞｰ	1	[AM][TTM]
A1	22N56-42851		COVER-ASSY,LH	ｶﾊﾞｰｱｯｾﾝ	1	1-121 INC.2-4
-	22N56-42852		COVER-ASSY,LH	ｶﾊﾞｰｱｯｾﾝ	1	122- INC.2-4
-	52N51-43021		COVER-ASSY,LH	ｶﾊﾞｰｱｯｾﾝ	1	1-121 [RWL/BB SW/AW071] [RWL/BBASW/AW071] INC.2-4
-	52N51-43022		COVER-ASSY,LH	ｶﾊﾞｰｱｯｾﾝ	1	122- [RWL/BB SW/AW071] [RWL/BBASW/AW071] INC.2-4
-	52N51-43031		COVER-ASSY,LH	ｶﾊﾞｰｱｯｾﾝ	1	1-121 [TPM][AM/TTM] INC.2-4
-	52N51-43032		COVER-ASSY,LH	ｶﾊﾞｰｱｯｾﾝ	1	122- [TPM][AM/TTM] INC.2-4
-	52N55-40411		COVER-ASSY,LH	ｶﾊﾞｰｱｯｾﾝ	1	1-121 [AW071/WAS071] INC.2-4
-	52N55-40412		COVER-ASSY,LH	ｶﾊﾞｰｱｯｾﾝ	1	122- [AW071/WAS071] INC.2-4
-	52N52-C3771		COVER-ASSY,LH	ｶﾊﾞｰｱｯｾﾝ	1	1-121 [PLR] INC.2-4
-	52N52-C3772		COVER-ASSY,LH	ｶﾊﾞｰｱｯｾﾝ	1	122- [PLR] INC.2-4
2	22N56-42721		COVER,LH	ｶﾊﾞｰ	1	1-121
-	22N56-42722		COVER,LH	ｶﾊﾞｰ	1	122-
-	52N51-42201		COVER,LH	ｶﾊﾞｰ	1	1-121 [RWL/BB SW/AW071] [RWL/BBASW/AW071]
-	52N51-42202		COVER,LH	ｶﾊﾞｰ	1	122- [RWL/BB SW/AW071] [RWL/BBASW/AW071]
-	52N51-42211		COVER,LH	ｶﾊﾞｰ	1	1-121 [TPM][AM/TTM]
-	52N51-42212		COVER,LH	ｶﾊﾞｰ	1	122- [TPM][AM/TTM]
-	52N55-40081		COVER,LH	ｶﾊﾞｰ	1	1-121 [AW071/WAS071]
-	52N55-40082		COVER,LH	ｶﾊﾞｰ	1	122- [AW071/WAS071]
-	52N52-C3871		COVER,LH	ｶﾊﾞｰ	1	1-121 [PLR]
-	52N52-C3872		COVER,LH	ｶﾊﾞｰ	1	122- [PLR]
3	22N56-42811		COVER	ｶﾊﾞｰ	2	
-	22N56-42811		COVER	ｶﾊﾞｰ	1	[PLR]
4	214A6-42781		SCREW	ｽｸﾘｭ	8	1-121
-	214A6-42781		SCREW	ｽｸﾘｭ	4	1-121 [PLR]
5	52N52-C3801		BRACKET	ﾌﾞﾗｹｯﾄ	1	[PLR]

FIG.136 FRONT SIDE COVER

(F7Z264C0) フロントサイドカバー

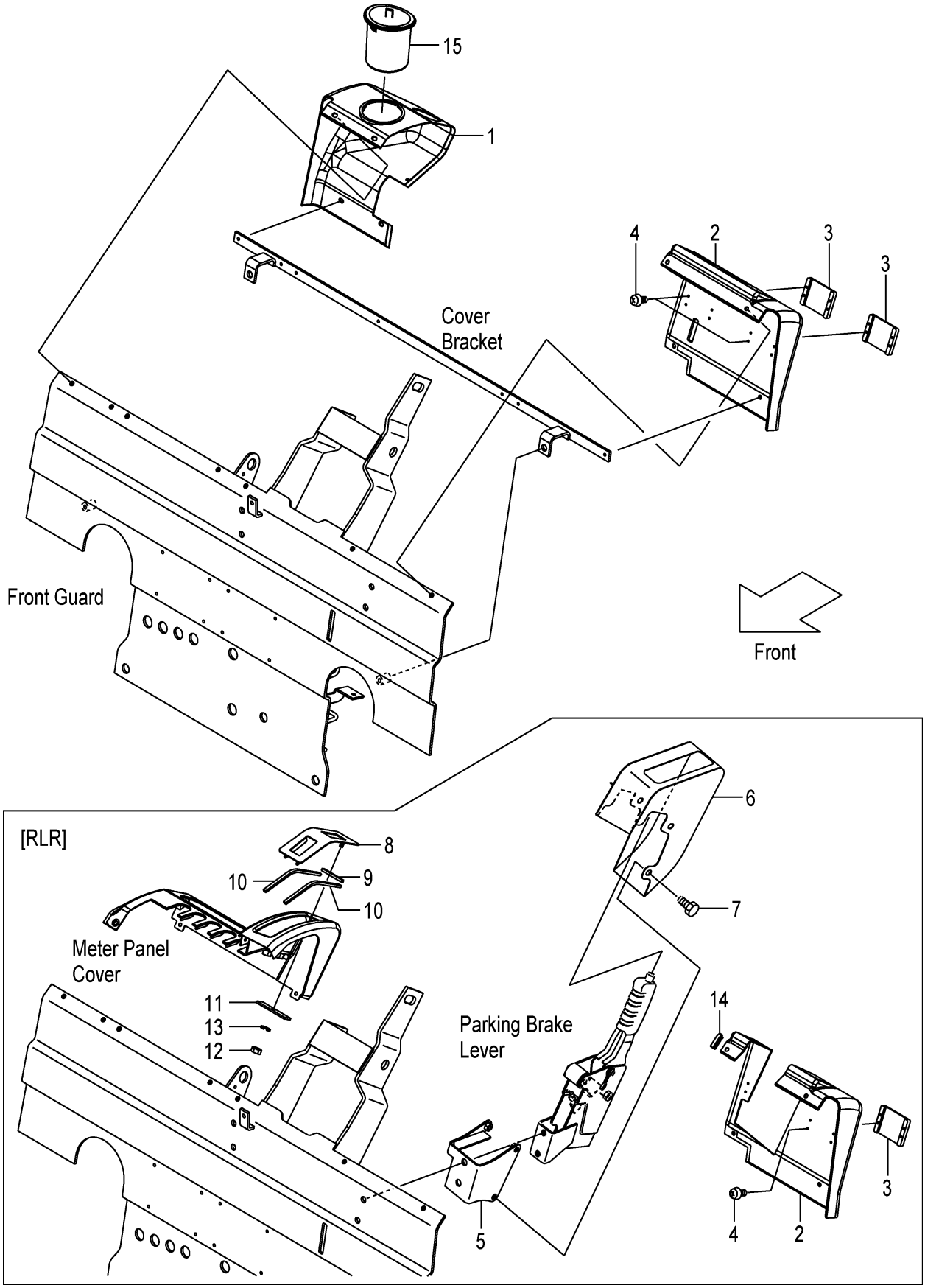

A:FD20C3Z FD20T3Z FD25C3Z FD25T3Z

Item No	Part No.	Mark	Description		Req'd	Remarks : Serial No.
6	52N52-C3831		COVER,PLR	ｶﾊﾞｰ	1	[PLR]
7	01185-08016		BOLT	ﾎﾞﾙﾄ	3	[PLR]
8	52N52-C3881		COVER,PLR	ｶﾊﾞｰ	1	[PLR]
9	52N52-C3911		RUBBER	ﾗﾊﾞｰ	1	[PLR]
10	52N52-C3921		RUBBER	ﾗﾊﾞｰ	2	[PLR]
11	52N52-C3931		PLATE	ﾌﾟﾚｰﾄ	1	[PLR]
12	01400-00006		NUT	ﾅｯﾄ	1	[PLR]
13	02010-00006		WASHER	ﾜｯｼｬ	1	[PLR]
14	209P6-42831		EDGING,L=50	ｴｯｼﾞﾝｸﾞ	1	[PLR]
15	22N56-42761		CUP,HOLDER	ｶｯﾌﾟ	1	(WITHOUT SM)

FIG.137 SEAT

(F7Z26810) シート

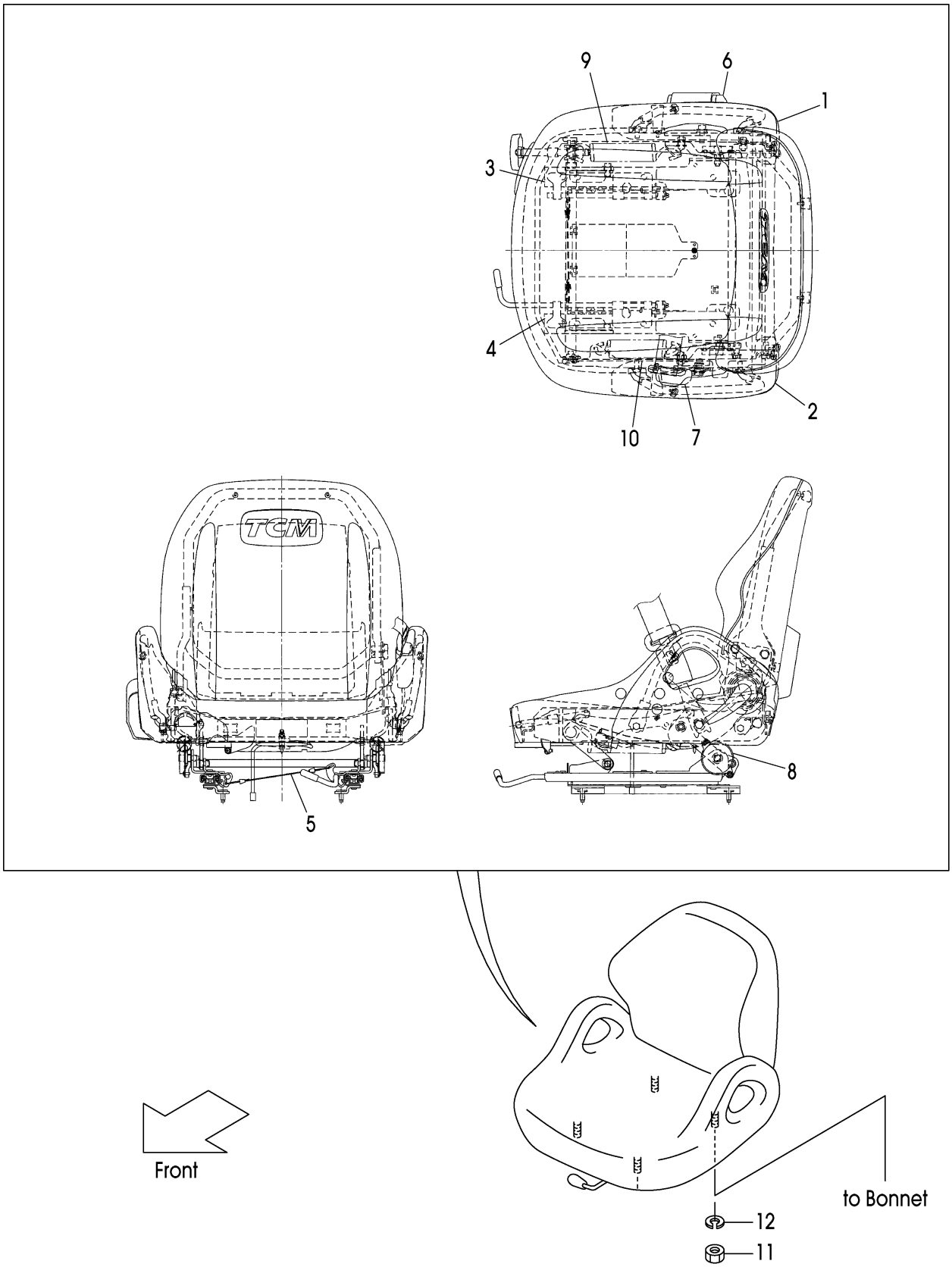

FIG.137
(F7Z26810)

A:FD20C3Z FD20T3Z FD25C3Z FD25T3Z

Item No	Part No.	Mark	Description		Req'd	Remarks : Serial No.
A1	242F6-80101		SEAT-ASSY	ｼｰﾄｱｯｾﾝ	1	INC.1-10
1	242F6-82041		SHIELD,RH	ｼｰﾙﾄﾞ	1	
2	242F6-82051		SHIELD,LH	ｼｰﾙﾄﾞ	1	
3	242F6-82081		TRACK,RH	ﾄﾗｯｸ	1	
4	242F6-82091		TRACK,LH	ﾄﾗｯｸ	1	
5	242F6-82101		WIRE	ﾜｲﾔ	1	
6	242F6-82111		BELT,SEAT,OUTER	ﾍﾞﾙﾄ	1	
7	242F6-82121		BELT,SEAT,INNER	ﾍﾞﾙﾄ	1	
8	242F6-82141		ABSORBER,SUSPENSION	ｱﾌﾞｿｰﾊﾞ	2	
9	242F6-82271		SPRING,TENSION	ｽﾌﾟﾘﾝｸﾞ	1	
10	242F6-82281		SPRING,TENSION	ｽﾌﾟﾘﾝｸﾞ	1	
11	01400-00008		NUT	ﾅｯﾄ	4	
12	02010-00008		WASHER	ﾜｯｼｬ	4	

FIG.138 SEAT [HGL]

(F7Z26820) シート

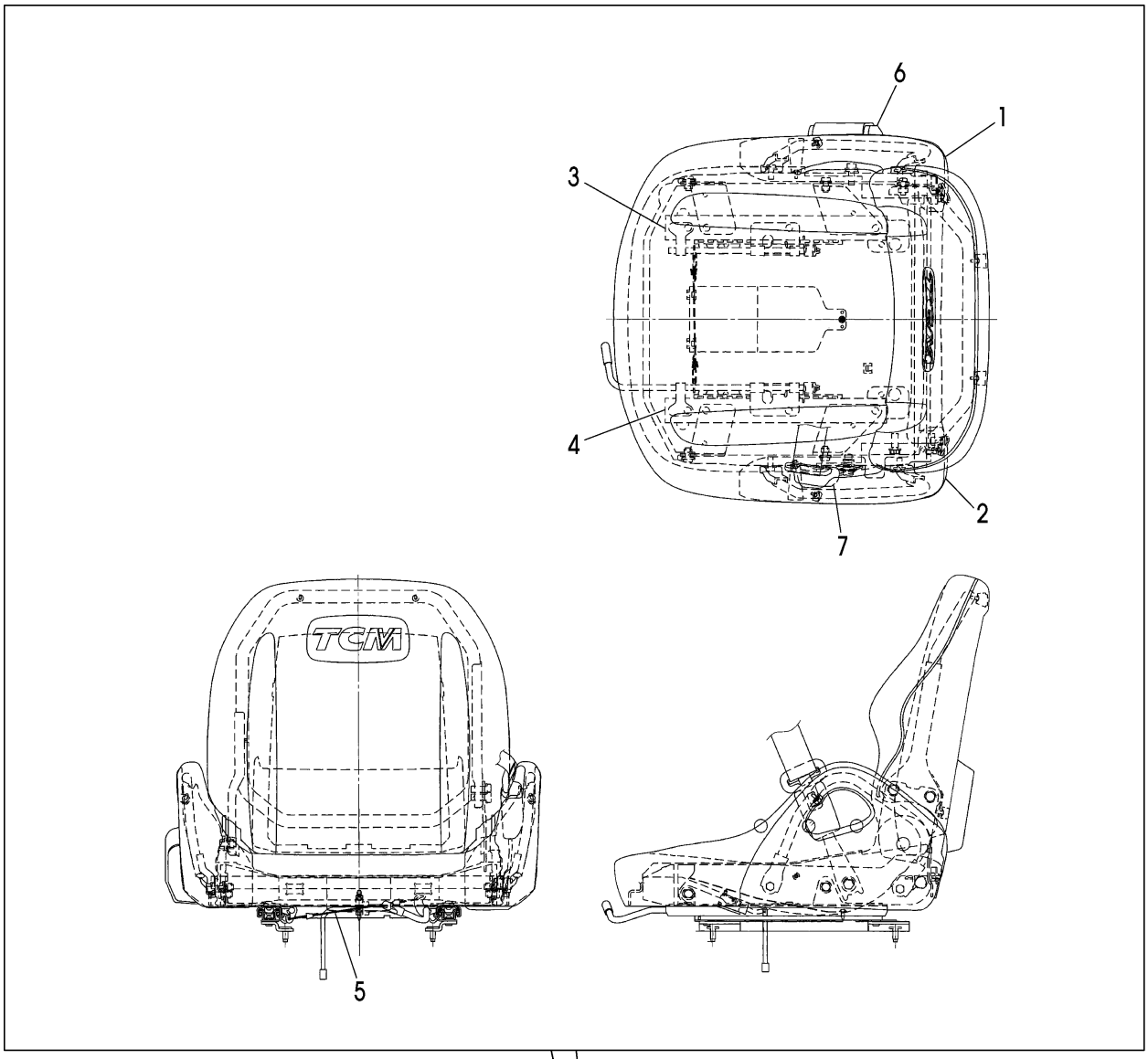

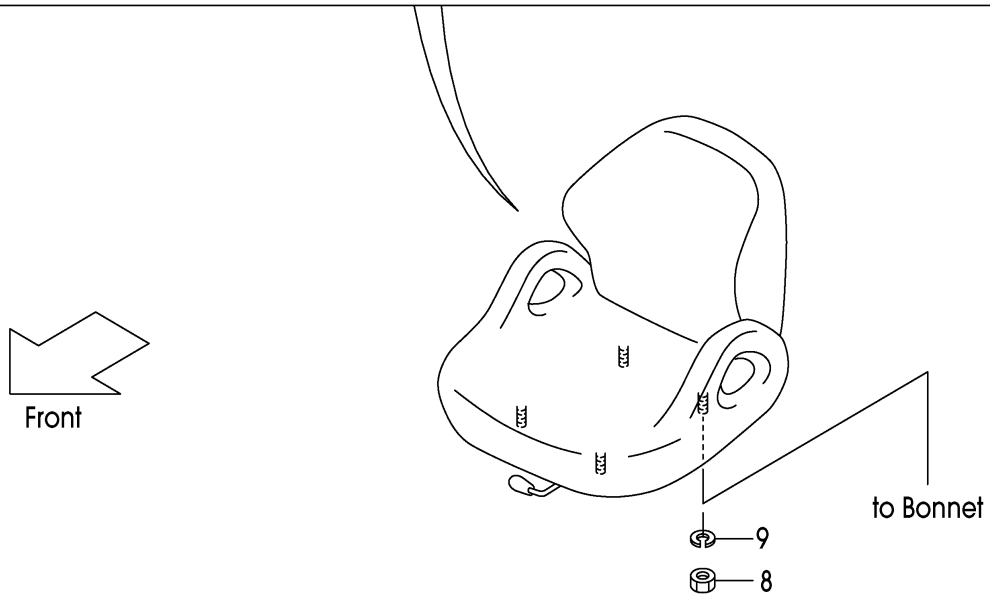

FIG.138
(F7Z26820)

A:FD20C3Z FD20T3Z FD25C3Z FD25T3Z

Item No	Part No.	Mark	Description		Req'd	Remarks : Serial No.
A1	242F6-80201		SEAT-ASSY	ｼｰﾄｱｯｾﾝ	1	[HGL] INC.1-7
1	242F6-82041		SHIELD,RH	ｼｰﾙﾄﾞ	1	[HGL]
2	242F6-82051		SHIELD,LH	ｼｰﾙﾄﾞ	1	[HGL]
3	242F6-82361		TRACK,RH	ﾄﾗｯｸ	1	[HGL]
4	242F6-82371		TRACK,LH	ﾄﾗｯｸ	1	[HGL]
5	242F6-82101		WIRE	ﾜｲﾔ	1	[HGL]
6	242F6-82111		BELT,SEAT,OUTER	ﾍﾞﾙﾄ	1	[HGL]
7	242F6-82121		BELT,SEAT,INNER	ﾍﾞﾙﾄ	1	[HGL]
8	01400-00008		NUT	ﾅｯﾄ	4	[HGL]
9	02010-00008		WASHER	ﾜｯｼｬ	4	[HGL]

FIG.139 SEAT [SIL]

(F7Z26830) シート

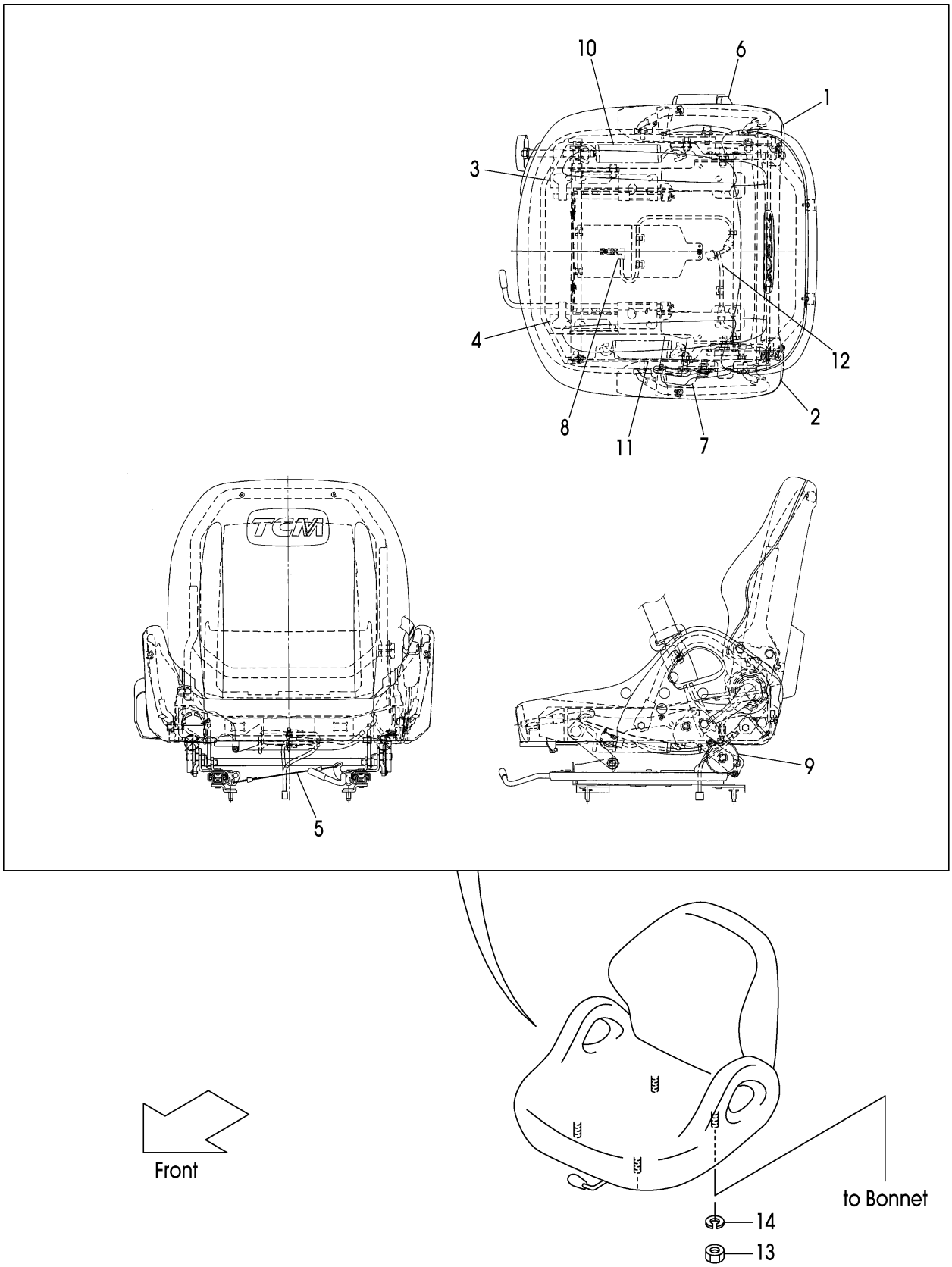

FIG.139

(F7Z26830)

A:FD20C3Z FD20T3Z FD25C3Z FD25T3Z

Item No	Part No.	Mark	Description		Req'd	Remarks : Serial No.
A1	52N56-22201		SEAT-ASSY	ｼｰﾄｱｯｾﾝ	1	[SIL](-2006.1.14) INC.1-12
1	242F6-82041		SHIELD,RH	ｼｰﾙﾄﾞ	1	[SIL](-2006.1.14)
2	242F6-82051		SHIELD,LH	ｼｰﾙﾄﾞ	1	[SIL](-2006.1.14)
3	242F6-82081		TRACK,RH	ﾄﾗｯｸ	1	[SIL](-2006.1.14)
4	242F6-82091		TRACK,LH	ﾄﾗｯｸ	1	[SIL](-2006.1.14)
5	242F6-82101		WIRE	ﾜｲﾔ	1	[SIL](-2006.1.14)
6	242F6-82111		BELT,SEAT,OUTER	ﾍﾞﾙﾄ	1	[SIL](-2006.1.14)
7	242F6-82121		BELT,SEAT,INNER	ﾍﾞﾙﾄ	1	[SIL](-2006.1.14)
8	542F3-82011		SWITCH,SEAT	ｽｲｯﾁ	1	[SIL](-2006.1.14)
9	242F6-82141		ABSORBER,SUSPENSION	ｱﾌﾞｿｰﾊﾞ	2	[SIL](-2006.1.14)
10	242F6-82271		SPRING,TENSION	ｽﾌﾟﾘﾝｸﾞ	1	[SIL](-2006.1.14)
11	242F6-82281		SPRING,TENSION	ｽﾌﾟﾘﾝｸﾞ	1	[SIL](-2006.1.14)
12	NO PART NO.		SWITCH,SEAT-BELT	ｽｲｯﾁ	1	[SIL](-2006.1.14)
13	01400-00008		NUT	ﾅｯﾄ	4	[SIL](-2006.1.14)
14	02010-00008		WASHER	ﾜｯｼｬ	4	[SIL](-2006.1.14)

FIG.139A SEAT [SIL]

(F7Z26831) シート

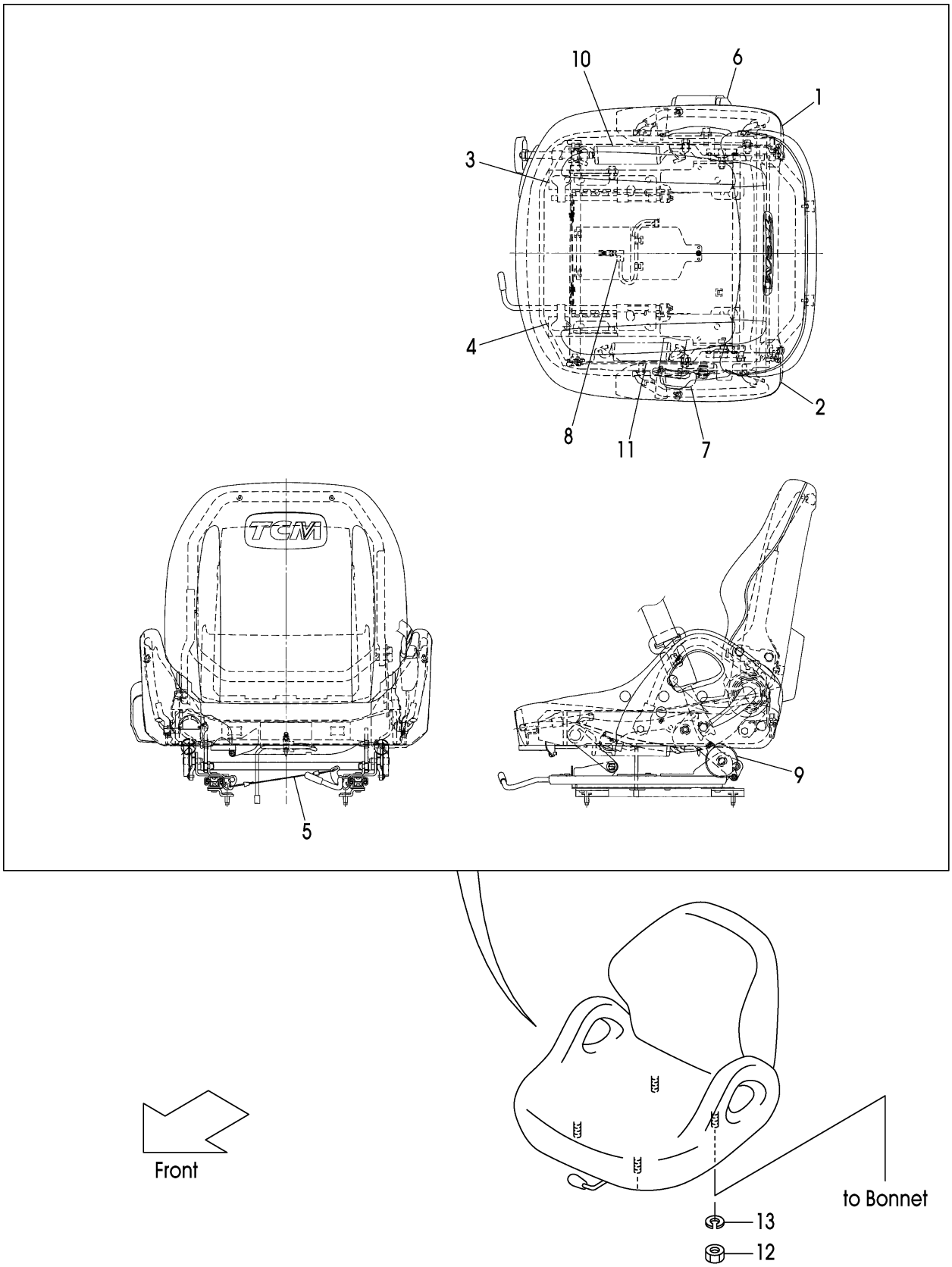

FIG.139A

(F7Z26831)

A:FD20C3Z FD20T3Z FD25C3Z FD25T3Z

Item No	Part No.	Mark	Description		Req'd	Remarks : Serial No.
A1	542F3-80101		SEAT-ASSY	ｼｰﾄｱｯｾﾝ	1	[SIL](2006.1.15-) INC.1-11
1	242F6-82041		SHIELD,RH	ｼｰﾙﾄﾞ	1	[SIL](2006.1.15-)
2	242F6-82051		SHIELD,LH	ｼｰﾙﾄﾞ	1	[SIL](2006.1.15-)
3	242F6-82081		TRACK,RH	ﾄﾗｯｸ	1	[SIL](2006.1.15-)
4	242F6-82091		TRACK,LH	ﾄﾗｯｸ	1	[SIL](2006.1.15-)
5	242F6-82101		WIRE	ﾜｲﾔ	1	[SIL](2006.1.15-)
6	242F6-82111		BELT,SEAT,OUTER	ﾍﾞﾙﾄ	1	[SIL](2006.1.15-)
7	242F6-82121		BELT,SEAT,INNER	ﾍﾞﾙﾄ	1	[SIL](2006.1.15-)
8	542F3-82011		SWITCH,SEAT	ｽｲｯﾁ	1	[SIL](2006.1.15-)
9	242F6-82141		ABSORBER,SUSPENSION	ｱﾌﾞｿｰﾊﾞ	2	[SIL](2006.1.15-)
10	242F6-82271		SPRING,TENSION	ｽﾌﾟﾘﾝｸﾞ	1	[SIL](2006.1.15-)
11	242F6-82281		SPRING,TENSION	ｽﾌﾟﾘﾝｸﾞ	1	[SIL](2006.1.15-)
12	01400-00008		NUT	ﾅｯﾄ	4	[SIL](2006.1.15-)
13	02010-00008		WASHER	ﾜｯｼｬ	4	[SIL](2006.1.15-)

FIG.140 SEAT [OKM]

(F7Z26840) シート

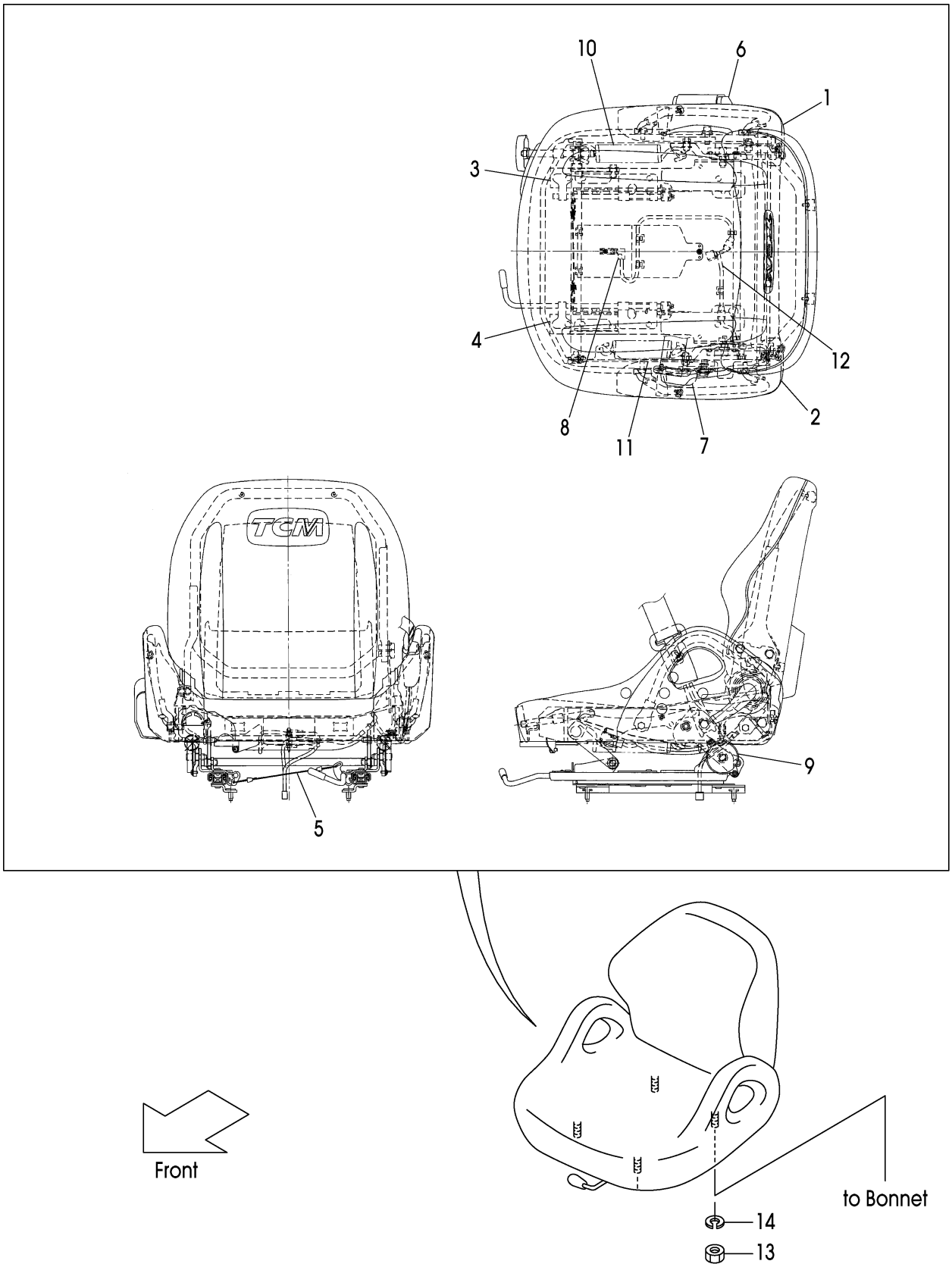

A:FD20C3Z FD20T3Z FD25C3Z FD25T3Z

Item No	Part No.	Mark	Description		Req'd	Remarks : Serial No.
A1	52N56-22201		SEAT-ASSY	ｼｰﾄｱｯｾﾝ	1	[OKM] INC.1-12
1	242F6-82041		SHIELD,RH	ｼｰﾙﾄﾞ	1	[OKM]
2	242F6-82051		SHIELD,LH	ｼｰﾙﾄﾞ	1	[OKM]
3	242F6-82081		TRACK,RH	ﾄﾗｯｸ	1	[OKM]
4	242F6-82091		TRACK,LH	ﾄﾗｯｸ	1	[OKM]
5	242F6-82101		WIRE	ﾜｲﾔ	1	[OKM]
6	242F6-82111		BELT,SEAT,OUTER	ﾍﾞﾙﾄ	1	[OKM]
7	242F6-82121		BELT,SEAT,INNER	ﾍﾞﾙﾄ	1	[OKM]
8	542F3-82011		SWITCH,SEAT	ｽｲｯﾁ	1	[OKM]
9	242F6-82141		ABSORBER,SUSPENSION	ｱﾌﾞｿｰﾊﾞ	2	[OKM]
10	242F6-82271		SPRING,TENSION	ｽﾌﾟﾘﾝｸﾞ	1	[OKM]
11	242F6-82281		SPRING,TENSION	ｽﾌﾟﾘﾝｸﾞ	1	[OKM]
12	NO PART NO.		SWITCH,SEAT-BELT	ｽｲｯﾁ	1	[OKM]
13	01400-00008		NUT	ﾅｯﾄ	4	[OKM]
14	02010-00008		WASHER	ﾜｯｼｬ	4	[OKM]

FIG.141 SEAT [OKM/SIL]

(F7Z26860) シート

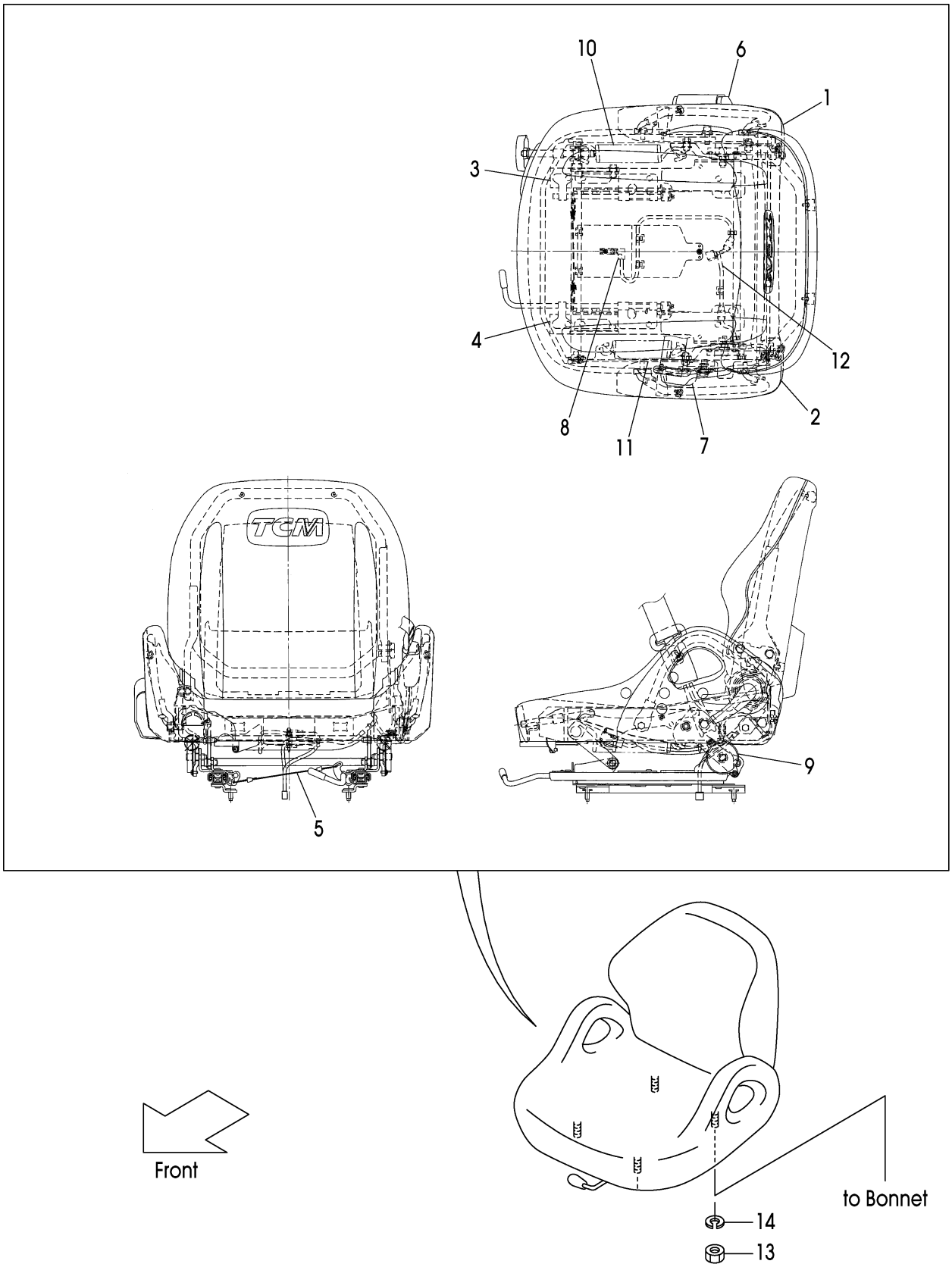

A:FD20C3Z FD20T3Z FD25C3Z FD25T3Z

Item No	Part No.	Mark	Description		Req'd	Remarks : Serial No.
A1	52N56-22201		SEAT-ASSY	ｼｰﾄｱｯｾﾝ	1	[OKM/SIL] INC.1-12
1	242F6-82041		SHIELD,RH	ｼｰﾙﾄﾞ	1	[OKM/SIL]
2	242F6-82051		SHIELD,LH	ｼｰﾙﾄﾞ	1	[OKM/SIL]
3	242F6-82081		TRACK,RH	ﾄﾗｯｸ	1	[OKM/SIL]
4	242F6-82091		TRACK,LH	ﾄﾗｯｸ	1	[OKM/SIL]
5	242F6-82101		WIRE	ﾜｲﾔ	1	[OKM/SIL]
6	242F6-82111		BELT,SEAT,OUTER	ﾍﾞﾙﾄ	1	[OKM/SIL]
7	242F6-82121		BELT,SEAT,INNER	ﾍﾞﾙﾄ	1	[OKM/SIL]
8	542F3-82011		SWITCH,SEAT	ｽｲｯﾁ	1	[OKM/SIL]
9	242F6-82141		ABSORBER,SUSPENSION	ｱﾌﾞｿｰﾊﾞ	2	[OKM/SIL]
10	242F6-82271		SPRING,TENSION	ｽﾌﾟﾘﾝｸﾞ	1	[OKM/SIL]
11	242F6-82281		SPRING,TENSION	ｽﾌﾟﾘﾝｸﾞ	1	[OKM/SIL]
12	NO PART NO.		SWITCH,SEAT-BELT	ｽｲｯﾁ	1	[OKM/SIL]
13	01400-00008		NUT	ﾅｯﾄ	4	[OKM/SIL]
14	02010-00008		WASHER	ﾜｯｼｬ	4	[OKM/SIL]

FIG.142 PUMP UNIT

(F7Z27110) ﾎﾟﾝﾌﾟﾕﾆｯﾄ

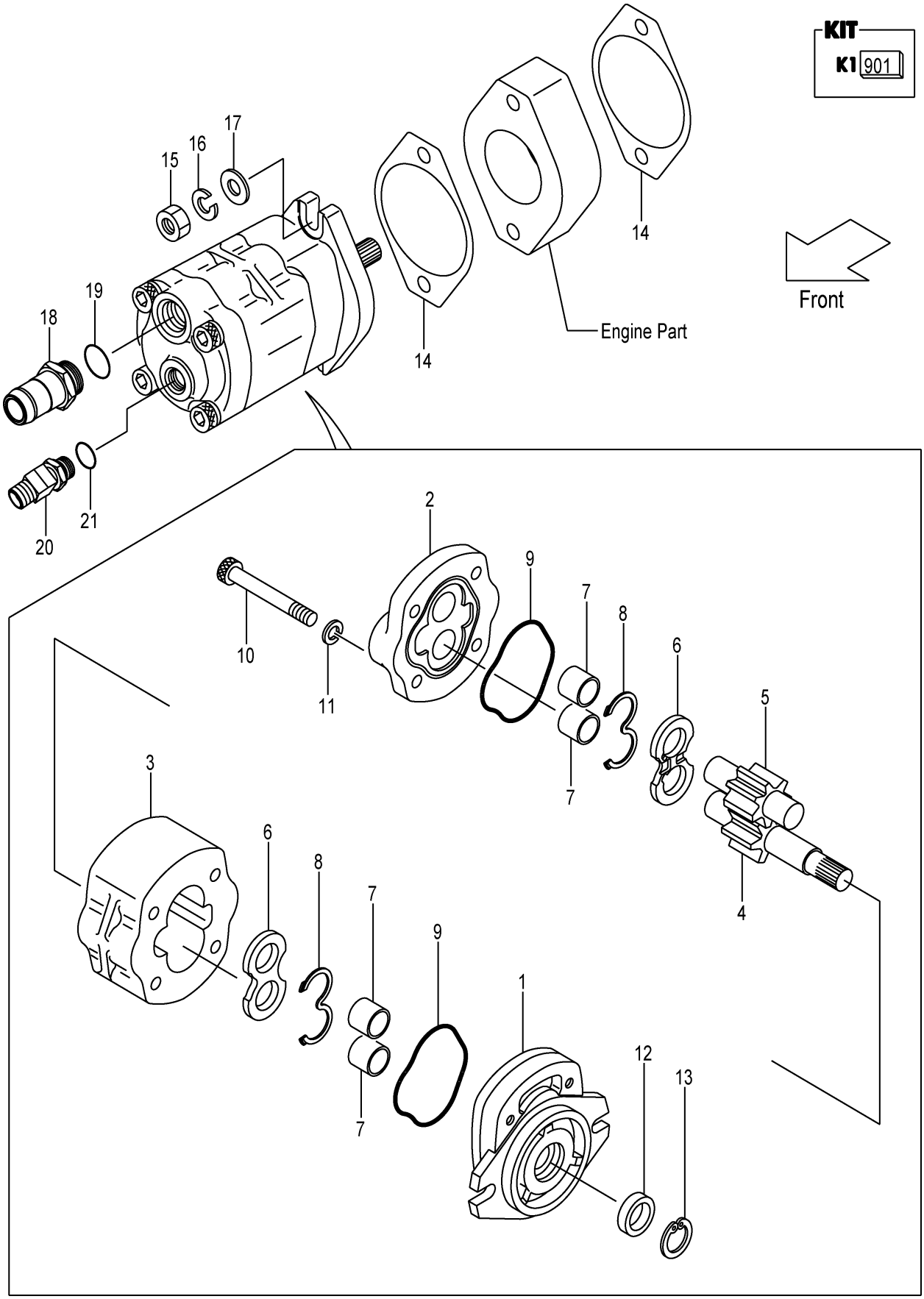

A:FD20C3Z FD20T3Z FD25C3Z FD25T3Z

Item No	Part No.	Mark	Description		Req'd	Remarks : Serial No.
A1	117M7-10401		PUMP-ASSY,GEAR	ｷﾞﾔｰﾎﾟﾝﾌﾟｱｯｾﾝ	1	INC.1-13
901	R-403-21988	K1	KIT,REPAIR	ﾘﾍﾟｱｷｯﾄ	1	INC.8,9,12
1	NO PART NO.	#	COVER,FRONT	ｶﾊﾞｰ	1	
2	NO PART NO.	#	COVER,REAR	ｶﾊﾞｰ	1	
3	NO PART NO.	#	BODY	ﾎﾞﾃﾞｨ	1	
4	NO PART NO.	#	GEAR,DRIVE	ｷﾞﾔｰ	1	
5	NO PART NO.	#	GEAR,DRIVEN	ｷﾞﾔｰ	1	
6	NO PART NO.	#	PLATE,SIDE	ﾌﾟﾚｰﾄ	2	
7	NO PART NO.	#	BUSHING	ﾌﾞｯｼﾝｸﾞ	4	
8	NO PART NO.	#*	GASKET	ｶﾞｽｹｯﾄ	2	
9	NO PART NO.	#*	GASKET	ｶﾞｽｹｯﾄ	2	
10	R-402-65004-41		BOLT	ﾎﾞﾙﾄ	4	
11	R-402-00710-12		WASHER	ﾜｯｼｬ	4	
12	NO PART NO.	#*	SEAL,OIL	ｼｰﾙ	1	
13	NO PART NO.	#	RING,SNAP	ﾘﾝｸﾞ	1	
14	23657-12002		PACKING	ﾊﾟｯｷﾝｸﾞ	2	
15	01402-00010		NUT	ﾅｯﾄ	2	
16	02010-00010		WASHER	ﾜｯｼｬ	2	
17	02000-00010		WASHER	ﾜｯｼｬ	2	
A2	225A7-62021		NIPPLE-ASSY	ﾆｯﾌﾟﾙｱｯｾﾝ	1	INC.18,19
18	NO PART NO.	#	NIPPLE	ﾆｯﾌﾟﾙ	1	
19	03320-00290		O-RING	Oﾘﾝｸﾞ	1	
A3	271A7-60351		ADAPTER-ASSY	ｱﾀﾞﾌﾟﾀｱｯｾﾝ	1	INC.20,21
20	NO PART NO.	#	ADAPTER	ｱﾀﾞﾌﾟﾀ	1	
21	03320-00180		O-RING	Oﾘﾝｸﾞ	1	

FIG.143 CONTROL VALVE [2SV]

(F7Z27310) コントロールバルブ

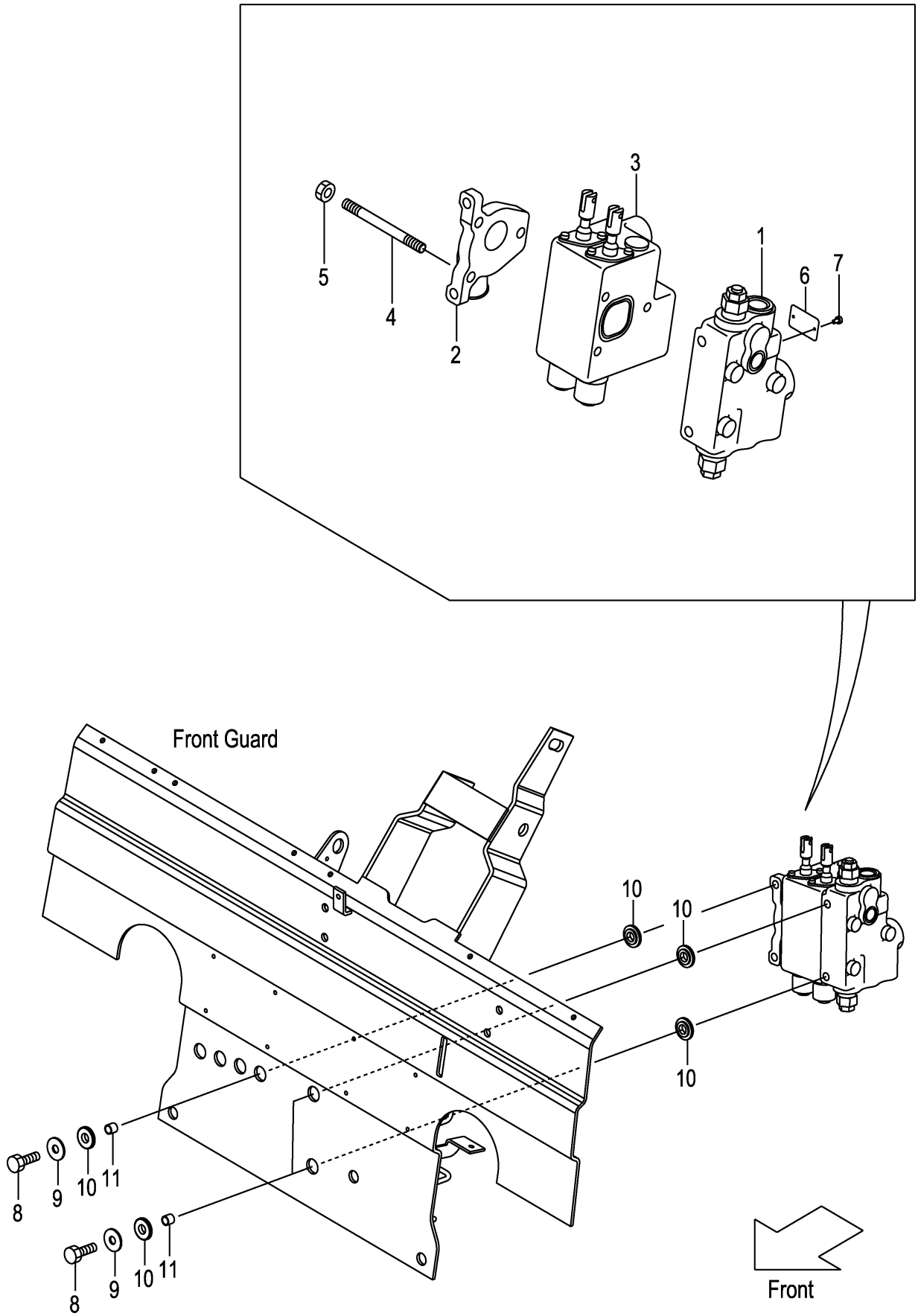

A:FD20C3Z FD20T3Z FD25C3Z FD25T3Z

Item No	Part No.	Mark	Description		Req'd	Remarks : Serial No.
A1	22N57-30221		VALVE-ASSY,CONTROL	ｺﾝﾄﾛｰﾙﾊﾞﾙﾌﾞｱｯｾﾝ	1	INC.1-7
-	52N54-60221		VALVE-ASSY,CONTROL	ｺﾝﾄﾛｰﾙﾊﾞﾙﾌﾞｱｯｾﾝ	1	[VLS] INC.1-7
-	52N56-70321		VALVE-ASSY,CONTROL	ｺﾝﾄﾛｰﾙﾊﾞﾙﾌﾞｱｯｾﾝ	1	[VLL][SIL] INC.1-7
-	52N56-70421		VALVE-ASSY,CONTROL	ｺﾝﾄﾛｰﾙﾊﾞﾙﾌﾞｱｯｾﾝ	1	[VLS/VLL][VLS/SIL] INC.1-7
1	22N57-33011		COVER,FRONT	ｶﾊﾞｰ	1	SEE FIG.153
-	22N57-32011		COVER,FRONT	ｶﾊﾞｰ	1	[VLS]SEE FIG.153
-	22N57-32011		COVER,FRONT	ｶﾊﾞｰ	1	[VLS/VLL][VLS/SIL]SEE FIG.153
2	22N57-33021		COVER,REAR	ｶﾊﾞｰ	1	
-	22N57-32021		COVER,REAR	ｶﾊﾞｰ	1	[VLL][SIL]SEE FIG.154
-	22N57-32021		COVER,REAR	ｶﾊﾞｰ	1	[VLS/VLL][VLS/SIL]SEE FIG.154
3	22N57-33031		VALVE,COMBINATION	ﾊﾞﾙﾌﾞ	1	SEE FIG.155
-	22N57-32031		VALVE,COMBINATION	ﾊﾞﾙﾌﾞ	1	[VLL][SIL]SEE FIG.155
-	22N57-32031		VALVE,COMBINATION	ﾊﾞﾙﾌﾞ	1	[VLS/VLL][VLS/SIL]SEE FIG.155
4	22N57-32321		BOLT,STUD	ﾎﾞﾙﾄ	3	
5	22N57-33141		NUT	ﾅｯﾄ	3	
6	22N57-33301		PLATE,NAME	ﾌﾟﾚｰﾄ	1	
7	22N57-33311		RIVET	ﾘﾍﾞｯﾄ	2	
8	22N57-32041		BOLT	ﾎﾞﾙﾄ	3	
9	216G7-32021		WASHER,PLANE	ﾜｯｼｬ	3	
10	22N57-42201		RUBBER,VALVE	ﾗﾊﾞｰ	6	
11	22N57-42211		COLLAR	ｶﾗｰ	3	

FIG.144 CONTROL VALVE [3SV]

(F7Z27320) ｺﾝﾄﾛｰﾙﾊﾞﾙﾌﾞ

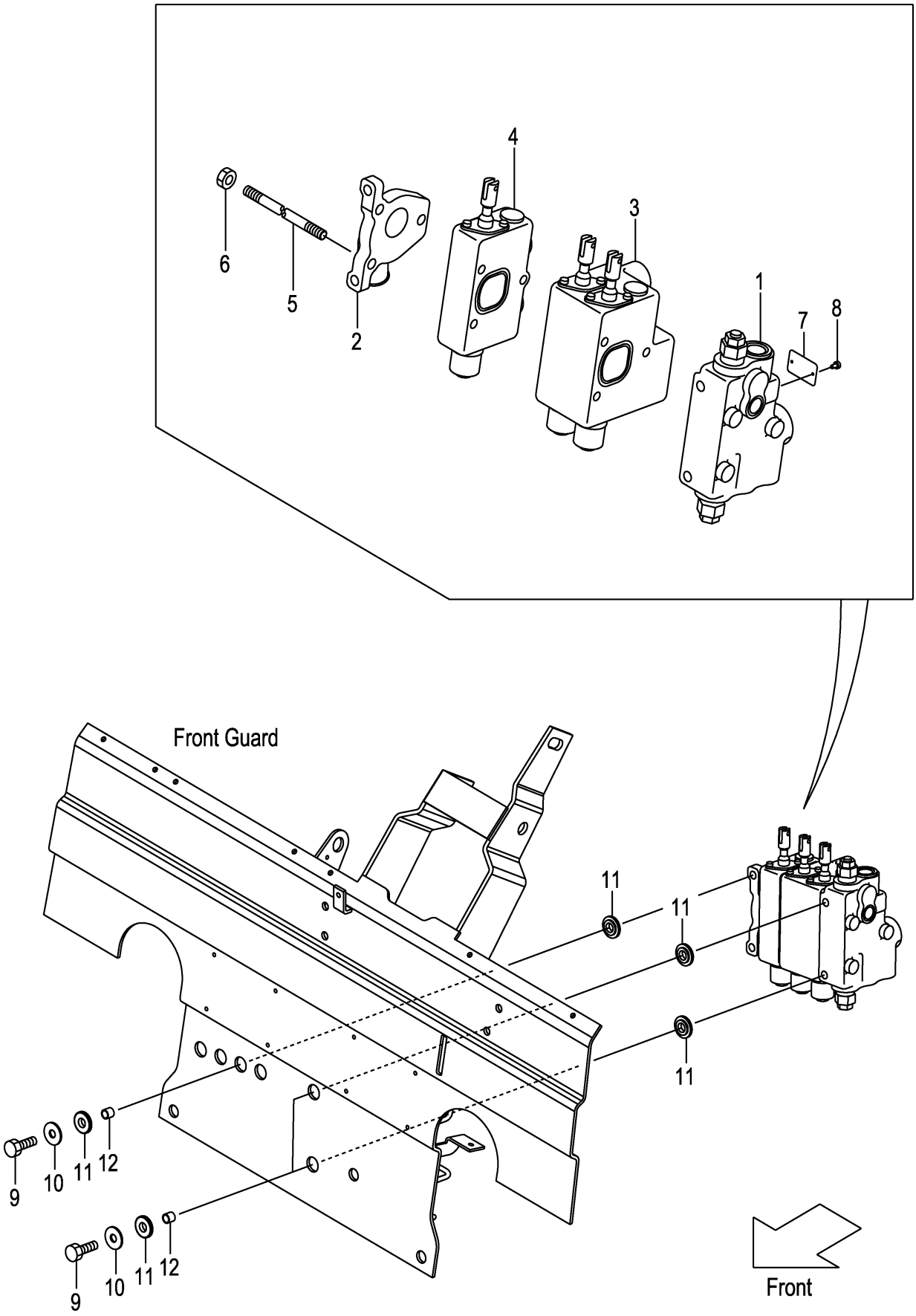

A:FD20C3Z FD20T3Z FD25C3Z FD25T3Z

Item No	Part No.	Mark	Description		Req'd	Remarks : Serial No.
A1	22N57-30231		VALVE-ASSY,CONTROL	ｺﾝﾄﾛｰﾙﾊﾞﾙﾌﾞｱｯｾﾝ	1	[3SV] INC.1-8
-	52N54-60231		VALVE-ASSY,CONTROL	ｺﾝﾄﾛｰﾙﾊﾞﾙﾌﾞｱｯｾﾝ	1	[3SV/VLS] INC.1-8
-	52N56-70331		VALVE-ASSY,CONTROL	ｺﾝﾄﾛｰﾙﾊﾞﾙﾌﾞｱｯｾﾝ	1	[3SV/VLL][3SV/SIL] INC.1-8
-	52N56-70431		VALVE-ASSY,CONTROL	ｺﾝﾄﾛｰﾙﾊﾞﾙﾌﾞｱｯｾﾝ	1	[3SV/VLS/VLL][3SV/VLS/SIL] INC.1-8
1	22N57-33011		COVER,FRONT	ｶﾊﾞｰ	1	[3SV]SEE FIG.153
-	22N57-32011		COVER,FRONT	ｶﾊﾞｰ	1	[3SV/VLS]SEE FIG.153
-	22N57-32011		COVER,FRONT	ｶﾊﾞｰ	1	[3SV/VLS/VLL][3SV/VLS/SIL] SEE FIG.153
2	22N57-33021		COVER,REAR	ｶﾊﾞｰ	1	[3SV]
-	22N57-32021		COVER,REAR	ｶﾊﾞｰ	1	[3SV/VLL][3SV/SIL]SEE FIG.154
-	22N57-32021		COVER,REAR	ｶﾊﾞｰ	1	[3SV/VLS/VLL][3SV/VLS/SIL] SEE FIG.154
3	22N57-33031		VALVE,COMBINATION	ﾊﾞﾙﾌﾞ	1	[3SV]SEE FIG.155
-	22N57-32031		VALVE,COMBINATION	ﾊﾞﾙﾌﾞ	1	[3SV/VLL][3SV/SIL]SEE FIG.155
-	22N57-32031		VALVE,COMBINATION	ﾊﾞﾙﾌﾞ	1	[3SV/VLS/VLL][3SV/VLS/SIL] SEE FIG.155
4	22N57-33041		SECTION,VALVE	ｾｸｼｮﾝ	1	[3SV]SEE FIG.156
5	22N57-32331		BOLT,STUD	ﾎﾞﾙﾄ	3	[3SV]
6	22N57-33141		NUT	ﾅｯﾄ	3	[3SV]
7	22N57-33301		PLATE,NAME	ﾌﾟﾚｰﾄ	1	[3SV]
8	22N57-33311		RIVET	ﾘﾍﾞｯﾄ	2	[3SV]
9	22N57-32041		BOLT	ﾎﾞﾙﾄ	3	[3SV]
10	216G7-32021		WASHER,PLANE	ﾜｯｼｬ	3	[3SV]
11	22N57-42201		RUBBER,VALVE	ﾗﾊﾞｰ	6	[3SV]
12	22N57-42211		COLLAR	ｶﾗｰ	3	[3SV]

FIG.145 CONTROL VALVE [4SV]

(F7Z27330) コントロールバルブ

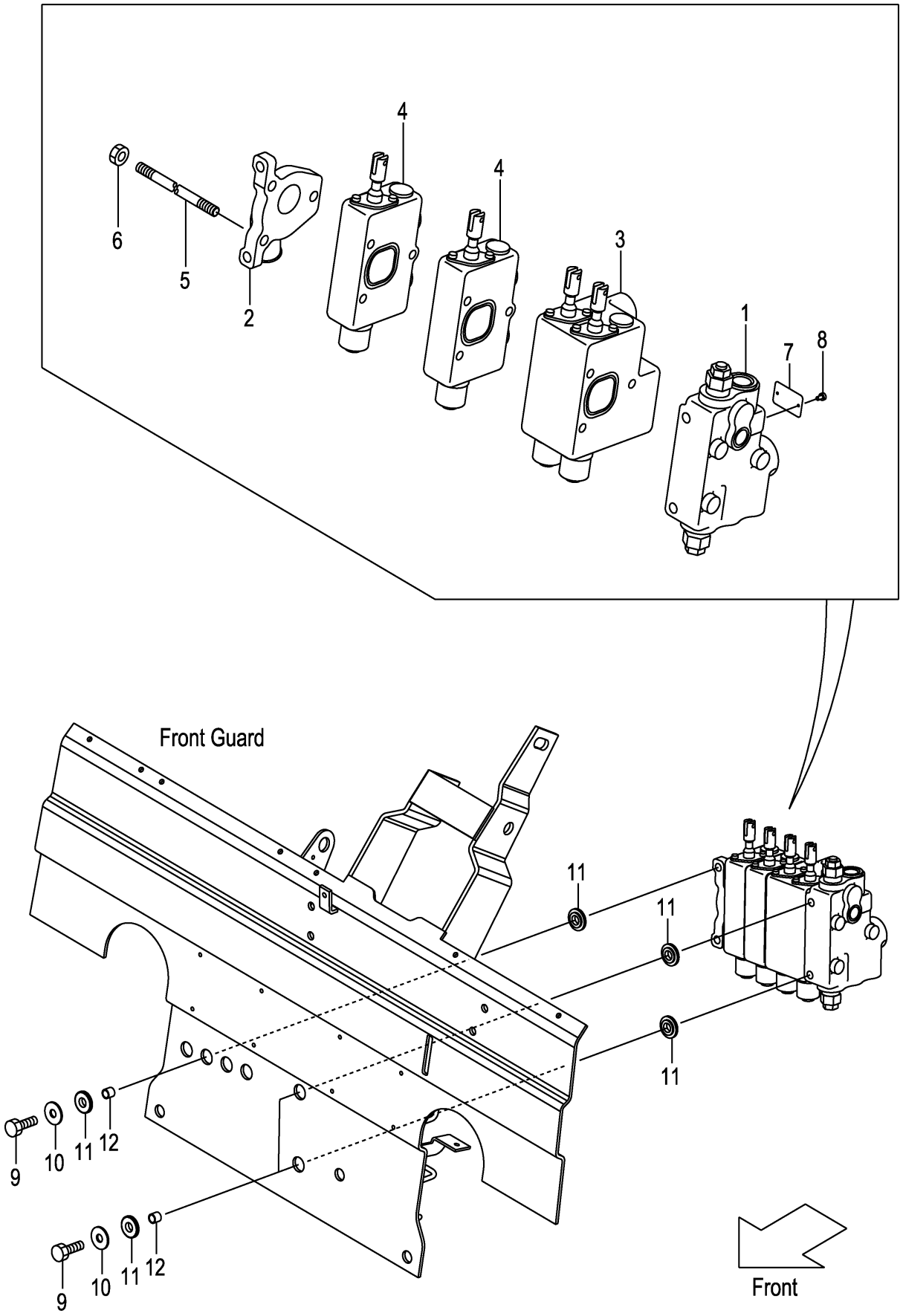

A:FD20C3Z FD20T3Z FD25C3Z FD25T3Z

Item No	Part No.	Mark	Description		Req'd	Remarks : Serial No.
A1	22N57-30241		VALVE-ASSY,CONTROL	ｺﾝﾄﾛｰﾙﾊﾞﾙﾌﾞｱｯｾﾝ	1	[4SV] INC.1-8
-	52N54-60241		VALVE-ASSY,CONTROL	ｺﾝﾄﾛｰﾙﾊﾞﾙﾌﾞｱｯｾﾝ	1	[4SV/VLS] INC.1-8
-	52N56-70341		VALVE-ASSY,CONTROL	ｺﾝﾄﾛｰﾙﾊﾞﾙﾌﾞｱｯｾﾝ	1	[4SV/VLL][4SV/SIL] INC.1-8
-	52N56-70441		VALVE-ASSY,CONTROL	ｺﾝﾄﾛｰﾙﾊﾞﾙﾌﾞｱｯｾﾝ	1	[4SV/VLS/VLL][4SV/VLS/SIL] INC.1-8
1	22N57-33011		COVER,FRONT	ｶﾊﾞｰ	1	[4SV]SEE FIG.153
-	22N57-32011		COVER,FRONT	ｶﾊﾞｰ	1	[4SV/VLS]SEE FIG.153
-	22N57-32011		COVER,FRONT	ｶﾊﾞｰ	1	[4SV/VLS/VLL][4SV/VLS/SIL] SEE FIG.153
2	22N57-33021		COVER,REAR	ｶﾊﾞｰ	1	[4SV]
-	22N57-32021		COVER,REAR	ｶﾊﾞｰ	1	[4SV/VLL][4SV/SIL]SEE FIG.154
-	22N57-32021		COVER,REAR	ｶﾊﾞｰ	1	[4SV/VLS/VLL][4SV/VLS/SIL] SEE FIG.154
3	22N57-33031		VALVE,COMBINATION	ﾊﾞﾙﾌﾞ	1	[4SV]SEE FIG.155
-	22N57-32031		VALVE,COMBINATION	ﾊﾞﾙﾌﾞ	1	[4SV/VLL][4SV/SIL]SEE FIG.155
-	22N57-32031		VALVE,COMBINATION	ﾊﾞﾙﾌﾞ	1	[4SV/VLS/VLL][4SV/VLS/SIL] SEE FIG.155
4	22N57-33041		SECTION,VALVE	ｾｸｼｮﾝ	2	[4SV]SEE FIG.156
5	22N57-32341		BOLT,STUD	ﾎﾞﾙﾄ	3	[4SV]
6	22N57-33141		NUT	ﾅｯﾄ	3	[4SV]
7	22N57-33301		PLATE,NAME	ﾌﾟﾚｰﾄ	1	[4SV]
8	22N57-33311		RIVET	ﾘﾍﾞｯﾄ	2	[4SV]
9	22N57-32041		BOLT	ﾎﾞﾙﾄ	3	[4SV]
10	216G7-32021		WASHER,PLANE	ﾜｯｼｬ	3	[4SV]
11	22N57-42201		RUBBER,VALVE	ﾗﾊﾞｰ	6	[4SV]
12	22N57-42211		COLLAR	ｶﾗｰ	3	[4SV]

FIG.146 CONTROL VALVE [5SV]

(F7Z27340) コントロールバルブ

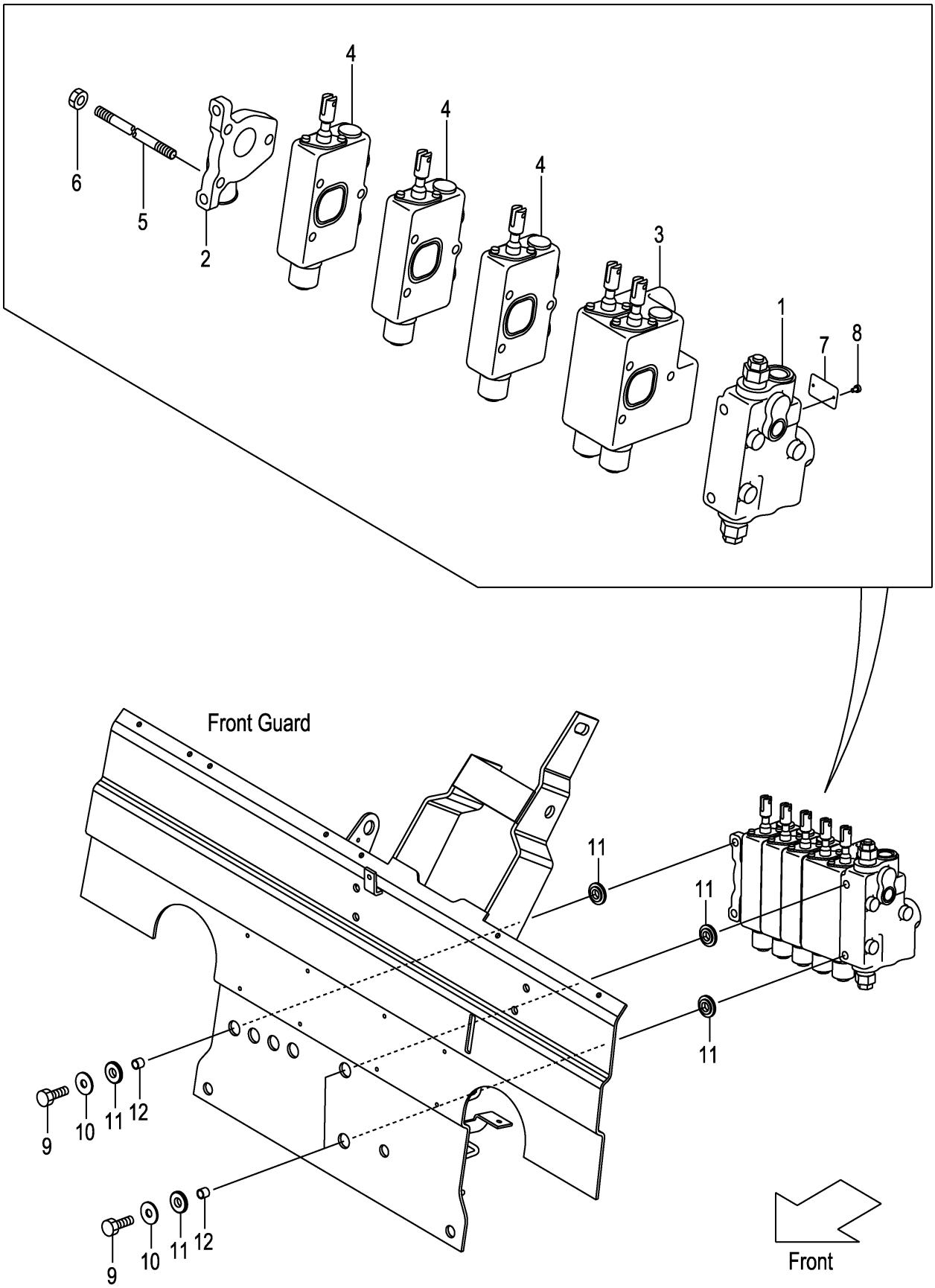

A:FD20C3Z FD20T3Z FD25C3Z FD25T3Z

Item No	Part No.	Mark	Description		Req'd	Remarks : Serial No.
A1	22N57-30251		VALVE-ASSY,CONTROL	ｺﾝﾄﾛｰﾙﾊﾞﾙﾌﾞｱｯｾﾝ	1	[5SV] INC.1-8
-	52N54-60251		VALVE-ASSY,CONTROL	ｺﾝﾄﾛｰﾙﾊﾞﾙﾌﾞｱｯｾﾝ	1	[5SV/VLS] INC.1-8
-	52N56-70351		VALVE-ASSY,CONTROL	ｺﾝﾄﾛｰﾙﾊﾞﾙﾌﾞｱｯｾﾝ	1	[5SV/VLL][5SV/SIL] INC.1-8
-	52N56-70451		VALVE-ASSY,CONTROL	ｺﾝﾄﾛｰﾙﾊﾞﾙﾌﾞｱｯｾﾝ	1	[5SV/VLS/VLL][5SV/VLS/SIL] INC.1-8
1	22N57-33011		COVER,FRONT	ｶﾊﾞｰ	1	[5SV]SEE FIG.153
-	22N57-32011		COVER,FRONT	ｶﾊﾞｰ	1	[5SV/VLS]SEE FIG.153
-	22N57-32011		COVER,FRONT	ｶﾊﾞｰ	1	[5SV/VLS/VLL][5SV/VLS/SIL] SEE FIG.153
2	22N57-33021		COVER,REAR	ｶﾊﾞｰ	1	[5SV]
-	22N57-32021		COVER,REAR	ｶﾊﾞｰ	1	[5SV/VLL][5SV/SIL]SEE FIG.154
-	22N57-32021		COVER,REAR	ｶﾊﾞｰ	1	[5SV/VLS/VLL][5SV/VLS/SIL] SEE FIG.154
3	22N57-33031		VALVE,COMBINATION	ﾊﾞﾙﾌﾞ	1	[5SV]SEE FIG.155
-	22N57-32031		VALVE,COMBINATION	ﾊﾞﾙﾌﾞ	1	[5SV/VLL][5SV/SIL]SEE FIG.155
-	22N57-32031		VALVE,COMBINATION	ﾊﾞﾙﾌﾞ	1	[5SV/VLS/VLL][5SV/VLS/SIL] SEE FIG.155
4	22N57-33041		SECTION,VALVE	ｾｸｼｮﾝ	3	[5SV]SEE FIG.156
5	22N57-32351		BOLT,STUD	ﾎﾞﾙﾄ	3	[5SV]
6	22N57-33141		NUT	ﾅｯﾄ	3	[5SV]
7	22N57-33301		PLATE,NAME	ﾌﾟﾚｰﾄ	1	[5SV]
8	22N57-33311		RIVET	ﾘﾍﾞｯﾄ	2	[5SV]
9	22N57-32041		BOLT	ﾎﾞﾙﾄ	3	[5SV]
10	216G7-32021		WASHER,PLANE	ﾜｯｼｬ	3	[5SV]
11	22N57-42201		RUBBER,VALVE	ﾗﾊﾞｰ	6	[5SV]
12	22N57-42211		COLLAR	ｶﾗｰ	3	[5SV]

FIG.147 CONTROL VALVE FITTING

(F7Z27350) コントロールバルブフィッティング

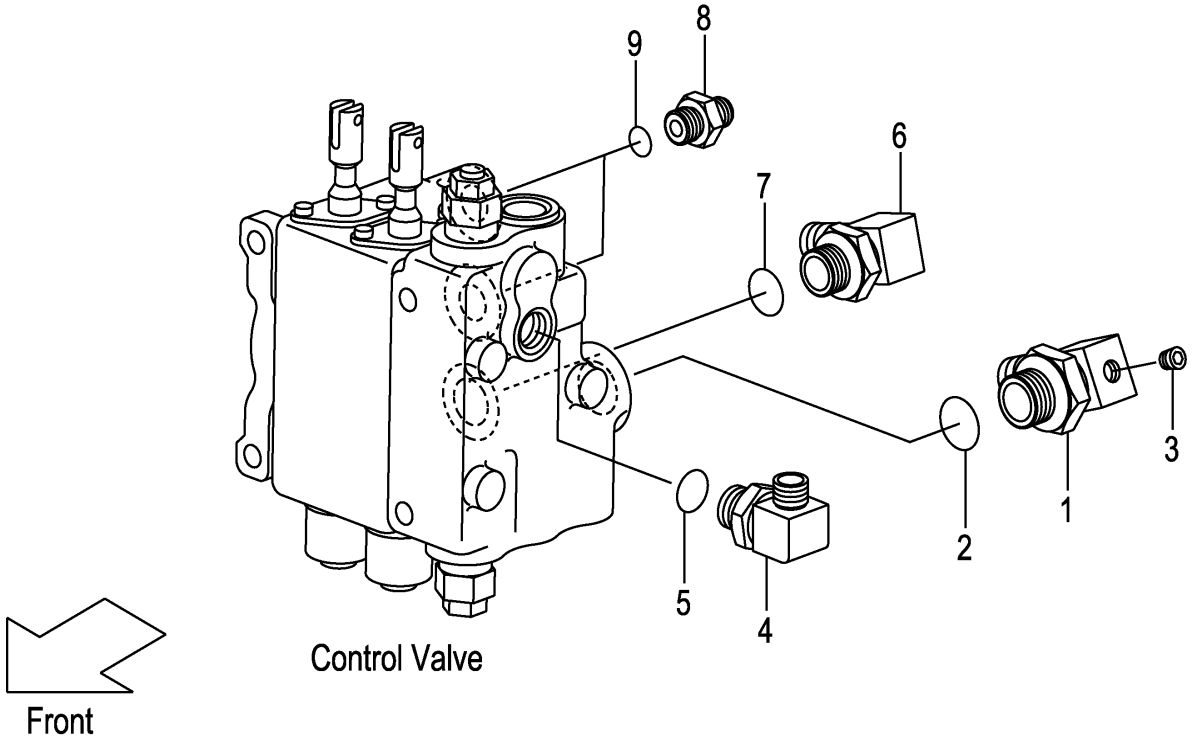

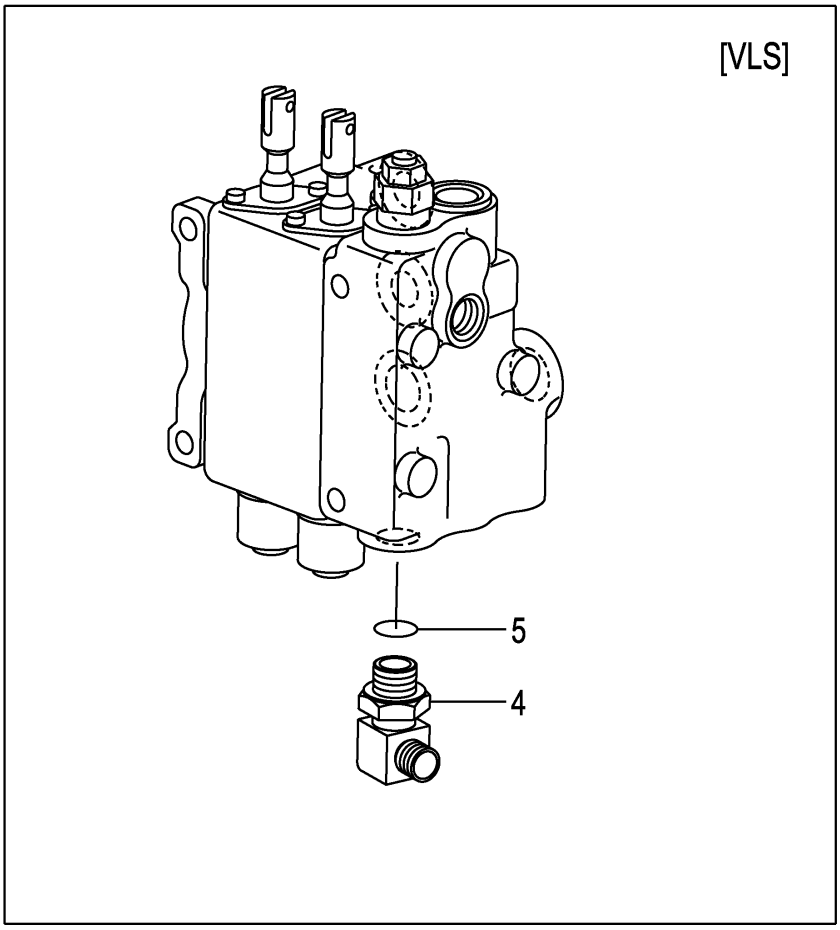

A:FD20C3Z FD20T3Z FD25C3Z FD25T3Z

Item No	Part No.	Mark	Description		Req'd	Remarks : Serial No.
A1	22N57-63011		ELBOW-ASSY	ｴﾙﾎﾞｱｯｾﾝ	1	INC.1-3
1	NO PART NO.	#	ELBOW	ｴﾙﾎﾞ	1	
2	03320-00240		O-RING	Oﾘﾝｸﾞ	1	
3	23870-52871		PLUG,SUNK	ﾌﾟﾗｸﾞ	1	
A2	04150-20202		ELBOW-ASSY	ｴﾙﾎﾞｱｯｾﾝ	1	INC.4,5
-	04150-20202		ELBOW-ASSY	ｴﾙﾎﾞｱｯｾﾝ	2	[VLS] INC.4,5
4	NO PART NO.	#	ELBOW	ｴﾙﾎﾞ	1	
-	NO PART NO.	#	ELBOW	ｴﾙﾎﾞ	2	[VLS]
5	03320-00110		O-RING	Oﾘﾝｸﾞ	1	
-	03320-00110		O-RING	Oﾘﾝｸﾞ	2	[VLS]
A3	04150-20404		ELBOW-ASSY	ｴﾙﾎﾞｱｯｾﾝ	1	INC.6,7
6	NO PART NO.	#	ELBOW	ｴﾙﾎﾞ	1	
7	03320-00180		O-RING	Oﾘﾝｸﾞ	1	
A4	277H7-60601		NIPPLE-ASSY	ﾆｯﾌﾟﾙｱｯｾﾝ	2	INC.8,9
8	NO PART NO.	#	NIPPLE	ﾆｯﾌﾟﾙ	2	
9	03320-00140		O-RING	Oﾘﾝｸﾞ	2	

FIG.148 VALVE CONTROL [2SV]

(F7Z273A0) ﾊﾞﾙﾌﾞｺﾝﾄﾛｰﾙ

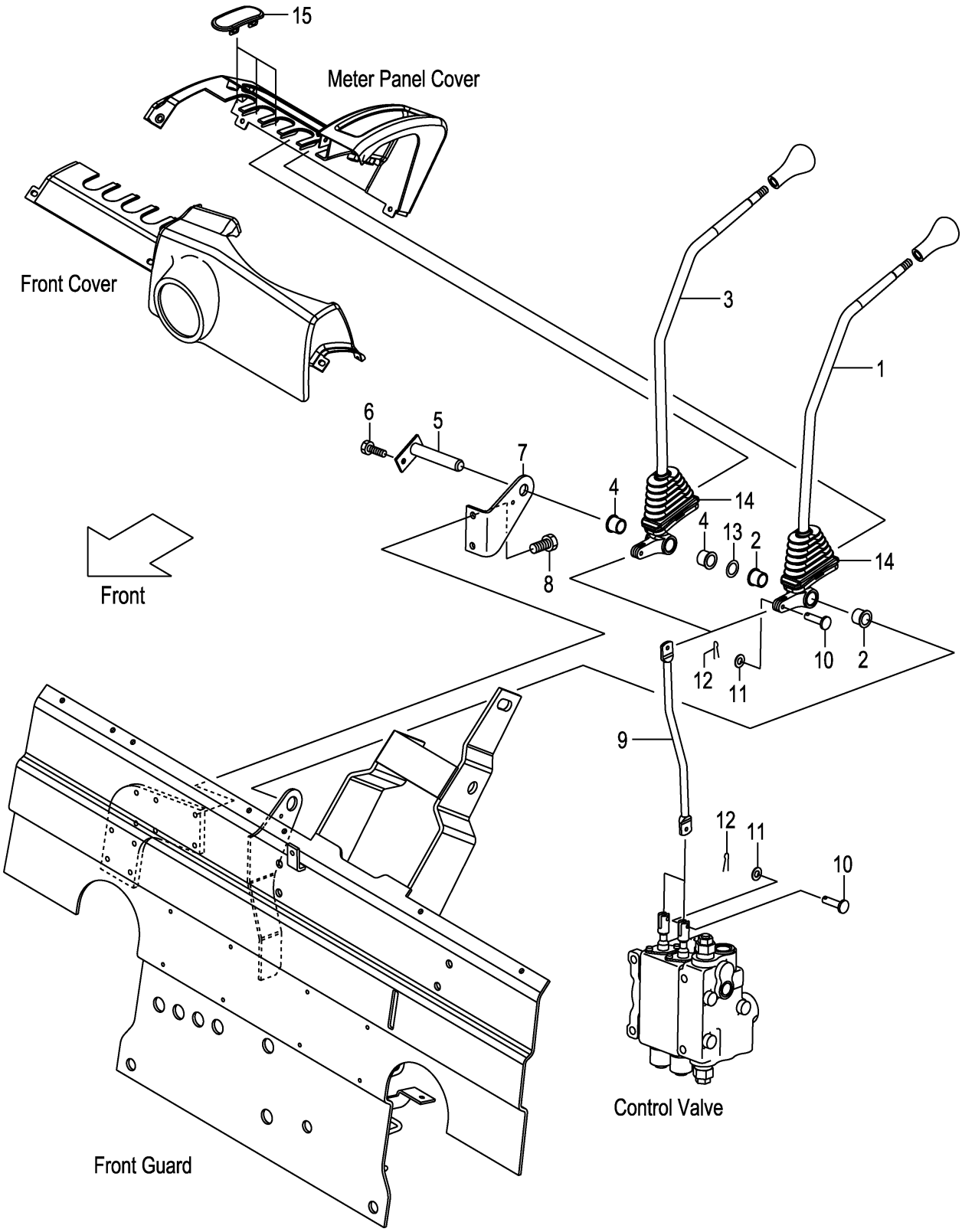

A:FD20C3Z FD20T3Z FD25C3Z FD25T3Z

Item No	Part No.	Mark	Description		Req'd	Remarks : Serial No.
A1	22N57-40011		LEVER-ASSY,LIFT	ﾘﾌﾄﾚﾊﾞｰｱｯｾﾝ	1	INC.1,2
1	NO PART NO.	#	LEVER,LIFT	ﾚﾊﾞｰ	1	
2	214A7-42071		BUSHING	ﾌﾞｯｼﾝｸﾞ	2	
A2	22N57-40021		LEVER-ASSY,TILT	ﾃｨﾙﾄﾚﾊﾞｰｱｯｾﾝ	1	INC.3,4
3	NO PART NO.	#	LEVER,TILT	ﾚﾊﾞｰ	1	
4	214A7-42071		BUSHING	ﾌﾞｯｼﾝｸﾞ	2	
5	23647-40041		SHAFT,2SV-LEVER	ｼｬﾌﾄ	1	
-	529F3-70401		SHAFT,2SV-LEVER	ｼｬﾌﾄ	1	[FC]
6	01183-06012		BOLT	ﾎﾞﾙﾄ	1	
7	22N57-42001		BRACKET,VALVE-LEVER	ﾌﾞﾗｹｯﾄ	1	
8	01183-08012		BOLT	ﾎﾞﾙﾄ	2	
9	22N57-42101		JOINT	ｼﾞｮｲﾝﾄ	2	
10	22N57-42121		PIN,CLEVIS	ﾋﾟﾝ	4	
11	02000-00005		WASHER	ﾜｯｼｬ	4	
12	02200-16010		PIN,COTTER	ﾋﾟﾝ	4	
13	22517-40051		SHIM,T-0.2	ｼﾑ	3	
14	22N57-42151		BOOT	ﾌﾞｰﾂ	2	
15	22N57-42161		COVER,VALVE-LEVER	ｶﾊﾞｰ	3	

FIG.149 VALVE CONTROL [3SV]

(F7Z273B0) ﾊﾞﾙﾌﾞｺﾝﾄﾛｰﾙ

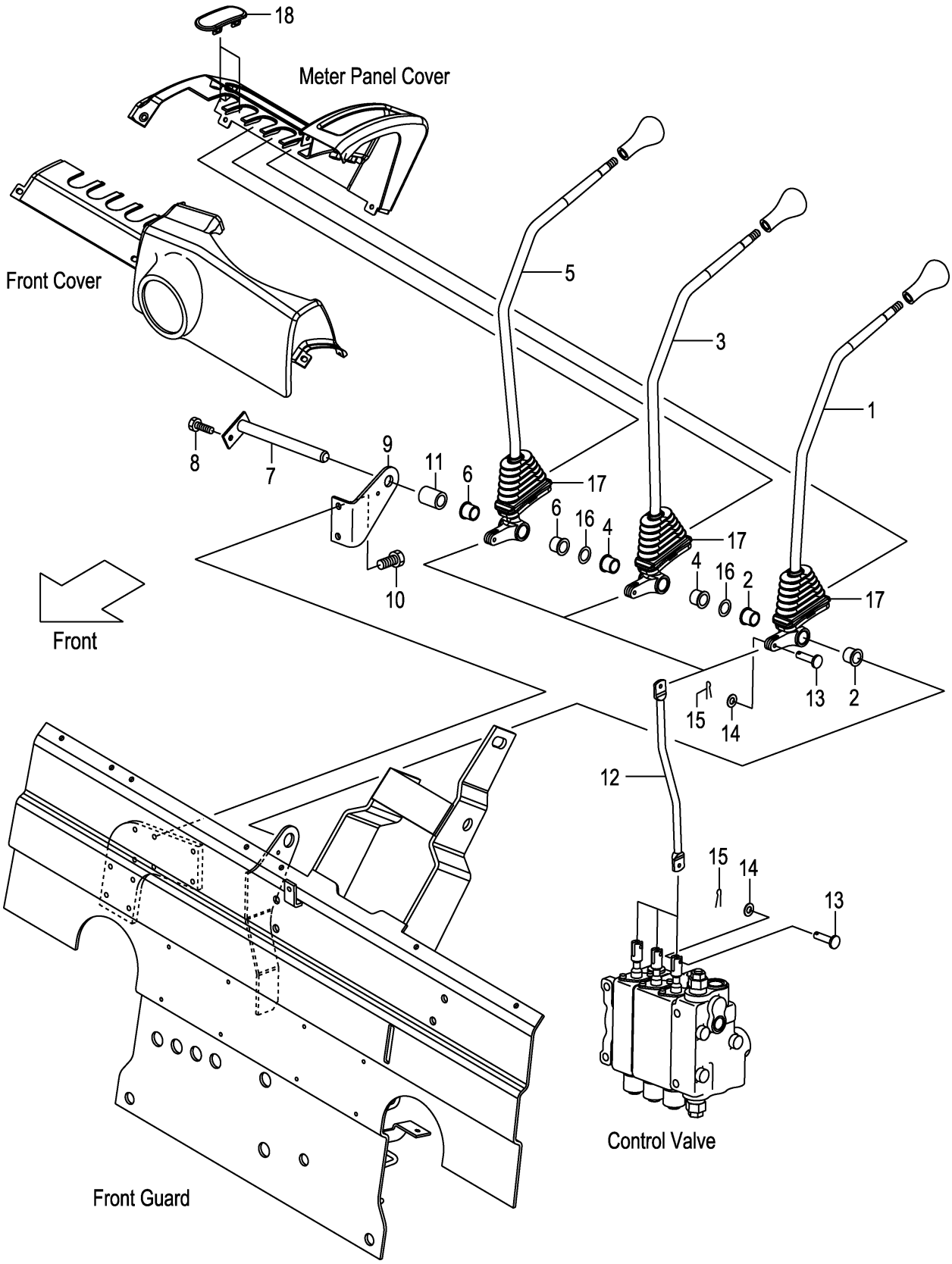

A:FD20C3Z FD20T3Z FD25C3Z FD25T3Z

Item No	Part No.	Mark	Description		Req'd	Remarks : Serial No.
A1	22N57-40011		LEVER-ASSY,LIFT	ﾘﾌﾄﾚﾊﾞｰｱｯｾﾝ	1	[3SV] INC.1,2
1	NO PART NO.	#	LEVER,LIFT	ﾚﾊﾞｰ	1	[3SV]
2	214A7-42071		BUSHING	ﾌﾞｯｼﾝｸﾞ	2	[3SV]
A2	22N57-40021		LEVER-ASSY,TILT	ﾃｨﾙﾄﾚﾊﾞｰｱｯｾﾝ	1	[3SV] INC.3,4
3	NO PART NO.	#	LEVER,TILT	ﾚﾊﾞｰ	1	[3SV]
4	214A7-42071		BUSHING	ﾌﾞｯｼﾝｸﾞ	2	[3SV]
A3	22N57-40031		LEVER-ASSY,THIRD	ｻｰﾄﾞﾚﾊﾞｰｱｯｾﾝ	1	[3SV] INC.5,6
5	NO PART NO.	#	LEVER,THIRD	ﾚﾊﾞｰ	1	[3SV]
6	214A7-42071		BUSHING	ﾌﾞｯｼﾝｸﾞ	2	[3SV]
7	23457-42041		SHAFT,3&4SV-LEVER	ｼｬﾌﾄ	1	[3SV]
-	529F3-70411		SHAFT,3&4SV-LEVER	ｼｬﾌﾄ	1	[3SV/FC]
8	01183-06012		BOLT	ﾎﾞﾙﾄ	1	[3SV]
9	22N57-42001		BRACKET,VALVE-LEVER	ﾌﾞﾗｹｯﾄ	1	[3SV]
10	01183-08012		BOLT	ﾎﾞﾙﾄ	2	[3SV]
11	23657-42131		COLLAR	ｶﾗｰ	1	[3SV]
12	22N57-42101		JOINT	ｼﾞｮｲﾝﾄ	3	[3SV]
13	22N57-42121		PIN,CLEVIS	ﾋﾟﾝ	6	[3SV]
14	02000-00005		WASHER	ﾜｯｼｬ	6	[3SV]
15	02200-16010		PIN,COTTER	ﾋﾟﾝ	6	[3SV]
16	22517-40051		SHIM,T-0.2	ｼﾑ	6	[3SV]
17	22N57-42151		BOOT	ﾌﾞｰﾂ	3	[3SV]
18	22N57-42161		COVER,VALVE-LEVER	ｶﾊﾞｰ	2	[3SV]

FIG.150 VALVE CONTROL [4SV]

(F7Z273C0) ﾊﾞﾙﾌﾞｺﾝﾄﾛｰﾙ

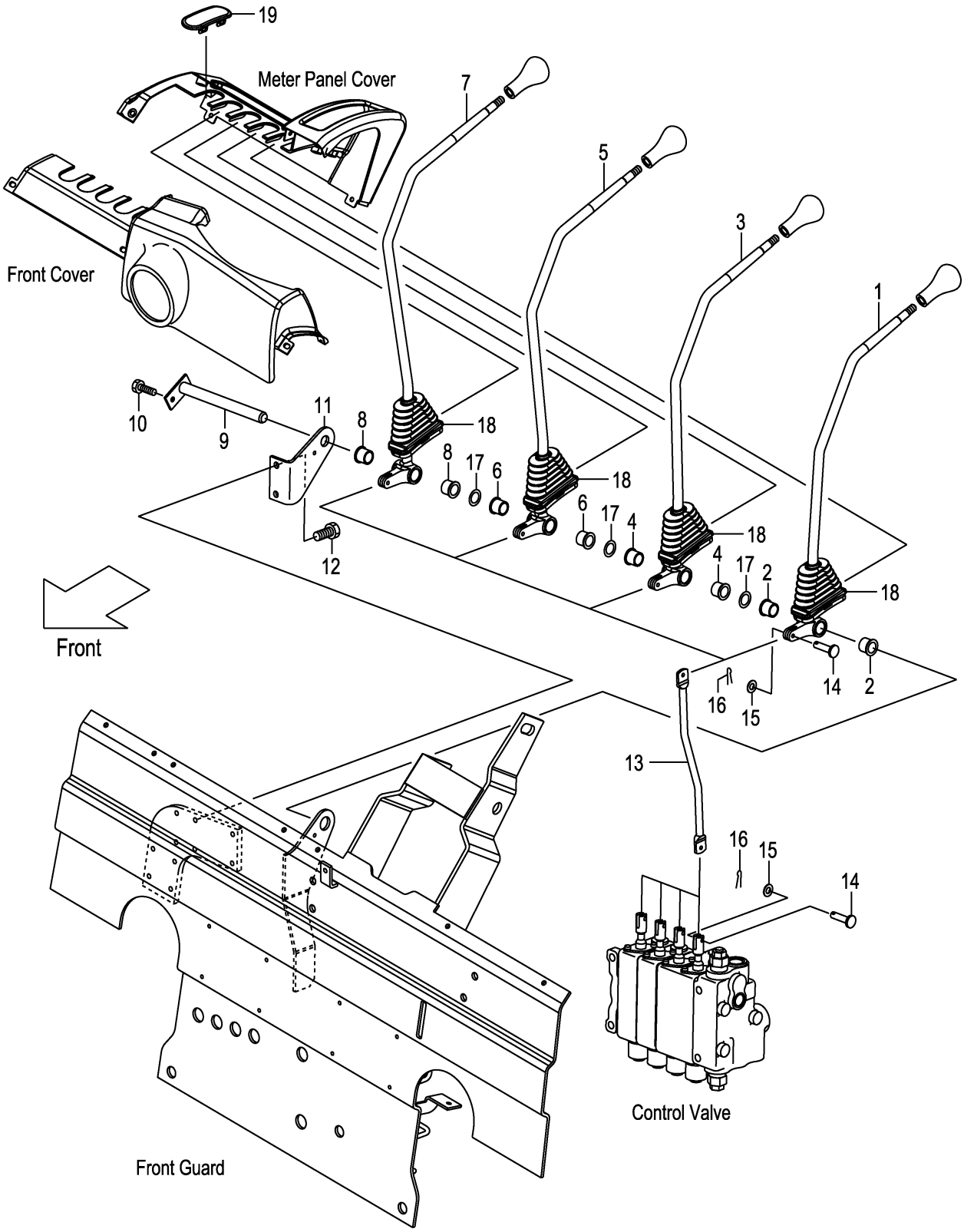

A:FD20C3Z FD20T3Z FD25C3Z FD25T3Z

Item No	Part No.	Mark	Description		Req'd	Remarks : Serial No.
A1	22N57-40011		LEVER-ASSY,LIFT	ﾘﾌﾄﾚﾊﾞｰｱｯｾﾝ	1	[4SV] INC.1,2
1	NO PART NO.	#	LEVER,LIFT	ﾚﾊﾞｰ	1	[4SV]
2	214A7-42071		BUSHING	ﾌﾞｯｼﾝｸﾞ	2	[4SV]
A2	22N57-40021		LEVER-ASSY,TILT	ﾃｨﾙﾄﾚﾊﾞｰｱｯｾﾝ	1	[4SV] INC.3,4
3	NO PART NO.	#	LEVER,TILT	ﾚﾊﾞｰ	1	[4SV]
4	214A7-42071		BUSHING	ﾌﾞｯｼﾝｸﾞ	2	[4SV]
A3	22N57-40031		LEVER-ASSY,THIRD	ｻｰﾄﾞﾚﾊﾞｰｱｯｾﾝ	1	[4SV] INC.5,6
5	NO PART NO.	#	LEVER,THIRD	ﾚﾊﾞｰ	1	[4SV]
6	214A7-42071		BUSHING	ﾌﾞｯｼﾝｸﾞ	2	[4SV]
A4	22N57-40041		LEVER-ASSY,FOURTH	ﾌｫｰｽﾚﾊﾞｰｱｯｾﾝ	1	[4SV] INC.7,8
7	NO PART NO.	#	LEVER,FOURTH	ﾚﾊﾞｰ	1	[4SV]
8	214A7-42071		BUSHING	ﾌﾞｯｼﾝｸﾞ	2	[4SV]
9	23457-42041		SHAFT,3&4SV-LEVER	ｼｬﾌﾄ	1	[4SV]
-	529F3-70411		SHAFT,3&4SV-LEVER	ｼｬﾌﾄ	1	[4SV/FC]
10	01183-06012		BOLT	ﾎﾞﾙﾄ	1	[4SV]
11	22N57-42001		BRACKET,VALVE-LEVER	ﾌﾞﾗｹｯﾄ	1	[4SV]
12	01183-08012		BOLT	ﾎﾞﾙﾄ	2	[4SV]
13	22N57-42101		JOINT	ｼﾞｮｲﾝﾄ	4	[4SV]
14	22N57-42121		PIN,CLEVIS	ﾋﾟﾝ	8	[4SV]
15	02000-00005		WASHER	ﾜｯｼｬ	8	[4SV]
16	02200-16010		PIN,COTTER	ﾋﾟﾝ	8	[4SV]
17	22517-40051		SHIM,T-0.2	ｼﾑ	9	[4SV]
18	22N57-42151		BOOT	ﾌﾞｰﾂ	4	[4SV]
19	22N57-42161		COVER,VALVE-LEVER	ｶﾊﾞｰ	1	[4SV]

FIG.151 VALVE CONTROL [5SV]

(F7Z273D0) ﾊﾞﾙﾌﾞｺﾝﾄﾛｰﾙ

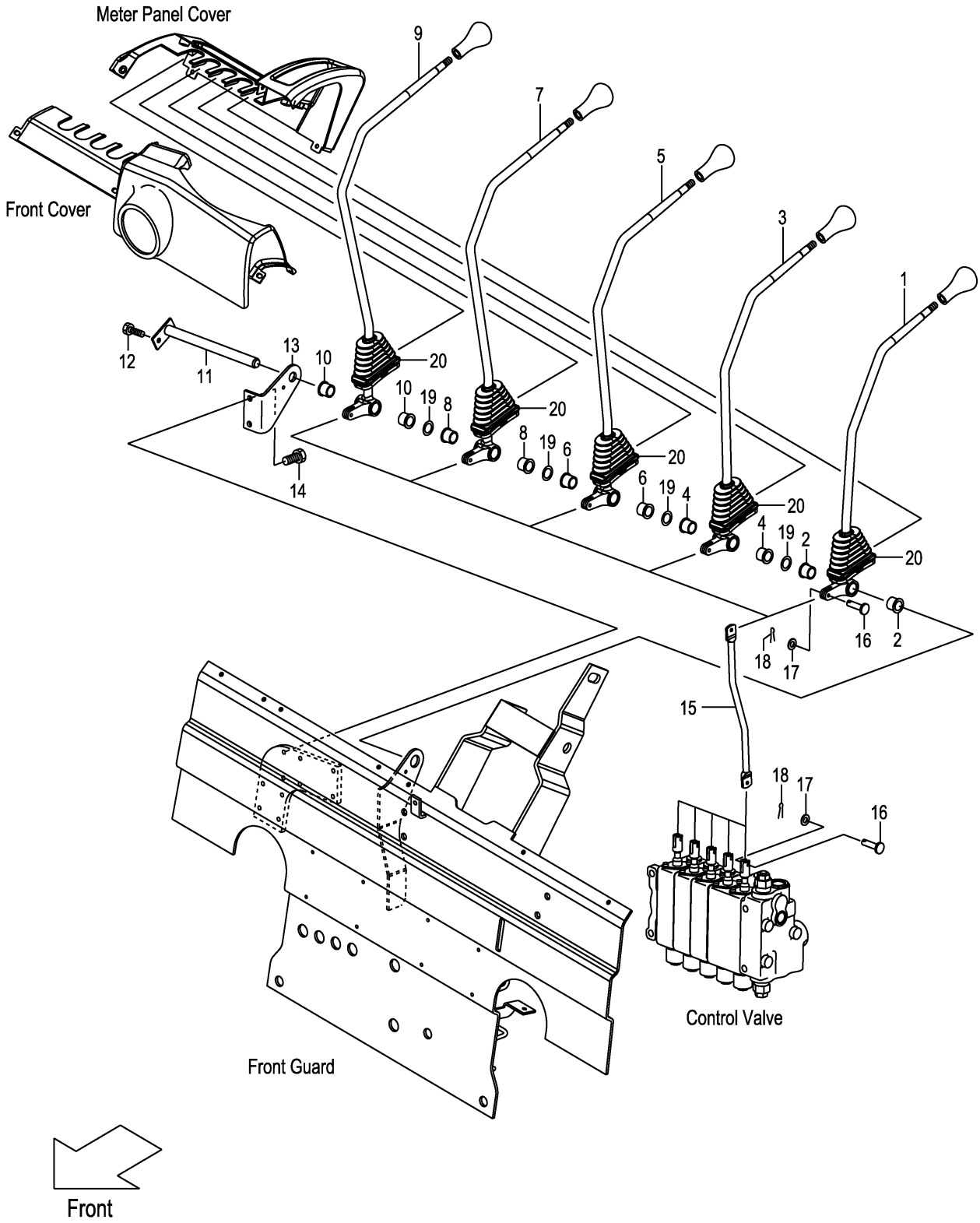

A:FD20C3Z FD20T3Z FD25C3Z FD25T3Z

Item No	Part No.	Mark	Description		Req'd	Remarks : Serial No.
A1	22N57-40011		LEVER-ASSY,LIFT	ﾘﾌﾄﾚﾊﾞｰｱｯｾﾝ	1	[5SV] INC.1,2
1	NO PART NO.	#	LEVER,LIFT	ﾚﾊﾞｰ	1	[5SV]
2	214A7-42071		BUSHING	ﾌﾞｯｼﾝｸﾞ	2	[5SV]
A2	22N57-40021		LEVER-ASSY,TILT	ﾃｨﾙﾄﾚﾊﾞｰｱｯｾﾝ	1	[5SV] INC.3,4
3	NO PART NO.	#	LEVER,TILT	ﾚﾊﾞｰ	1	[5SV]
4	214A7-42071		BUSHING	ﾌﾞｯｼﾝｸﾞ	2	[5SV]
A3	22N57-40031		LEVER-ASSY,THIRD	ｻｰﾄﾞﾚﾊﾞｰｱｯｾﾝ	1	[5SV] INC.5,6
5	NO PART NO.	#	LEVER,THIRD	ﾚﾊﾞｰ	1	[5SV]
6	214A7-42071		BUSHING	ﾌﾞｯｼﾝｸﾞ	2	[5SV]
A4	22N57-40041		LEVER-ASSY,FOURTH	ﾌｫｰｽﾚﾊﾞｰｱｯｾﾝ	1	[5SV] INC.7,8
7	NO PART NO.	#	LEVER,FOURTH	ﾚﾊﾞｰ	1	[5SV]
8	214A7-42071		BUSHING	ﾌﾞｯｼﾝｸﾞ	2	[5SV]
A5	22N57-40051		LEVER-ASSY,FIFTH	ﾌｨﾌｽﾚﾊﾞｰｱｯｾﾝ	1	[5SV] INC.9,10
9	NO PART NO.	#	LEVER,FIFTH	ﾚﾊﾞｰ	1	[5SV]
10	214A7-42071		BUSHING	ﾌﾞｯｼﾝｸﾞ	2	[5SV]
11	55593-02371		SHAFT,5SV-LEVER	ｼｬﾌﾄ	1	[5SV]
-	529F3-70421		SHAFT,5SV-LEVER	ｼｬﾌﾄ	1	[5SV/FC]
12	01183-06012		BOLT	ﾎﾞﾙﾄ	1	[5SV]
13	22N57-42001		BRACKET,VALVE-LEVER	ﾌﾞﾗｹｯﾄ	1	[5SV]
14	01183-08012		BOLT	ﾎﾞﾙﾄ	2	[5SV]
15	22N57-42101		JOINT	ｼﾞｮｲﾝﾄ	5	[5SV]
16	22N57-42121		PIN,CLEVIS	ﾋﾟﾝ	10	[5SV]
17	02000-00005		WASHER	ﾜｯｼｬ	10	[5SV]
18	02200-16010		PIN,COTTER	ﾋﾟﾝ	10	[5SV]
19	22517-40051		SHIM,T-0.2	ｼﾑ	12	[5SV]
20	22N57-42151		BOOT	ﾌﾞｰﾂ	5	[5SV]

FIG.152 VALVE CONTROL KNOB

(F7Z273E0) ﾊﾞﾙﾌﾞｺﾝﾄﾛｰﾙﾉﾌﾞ

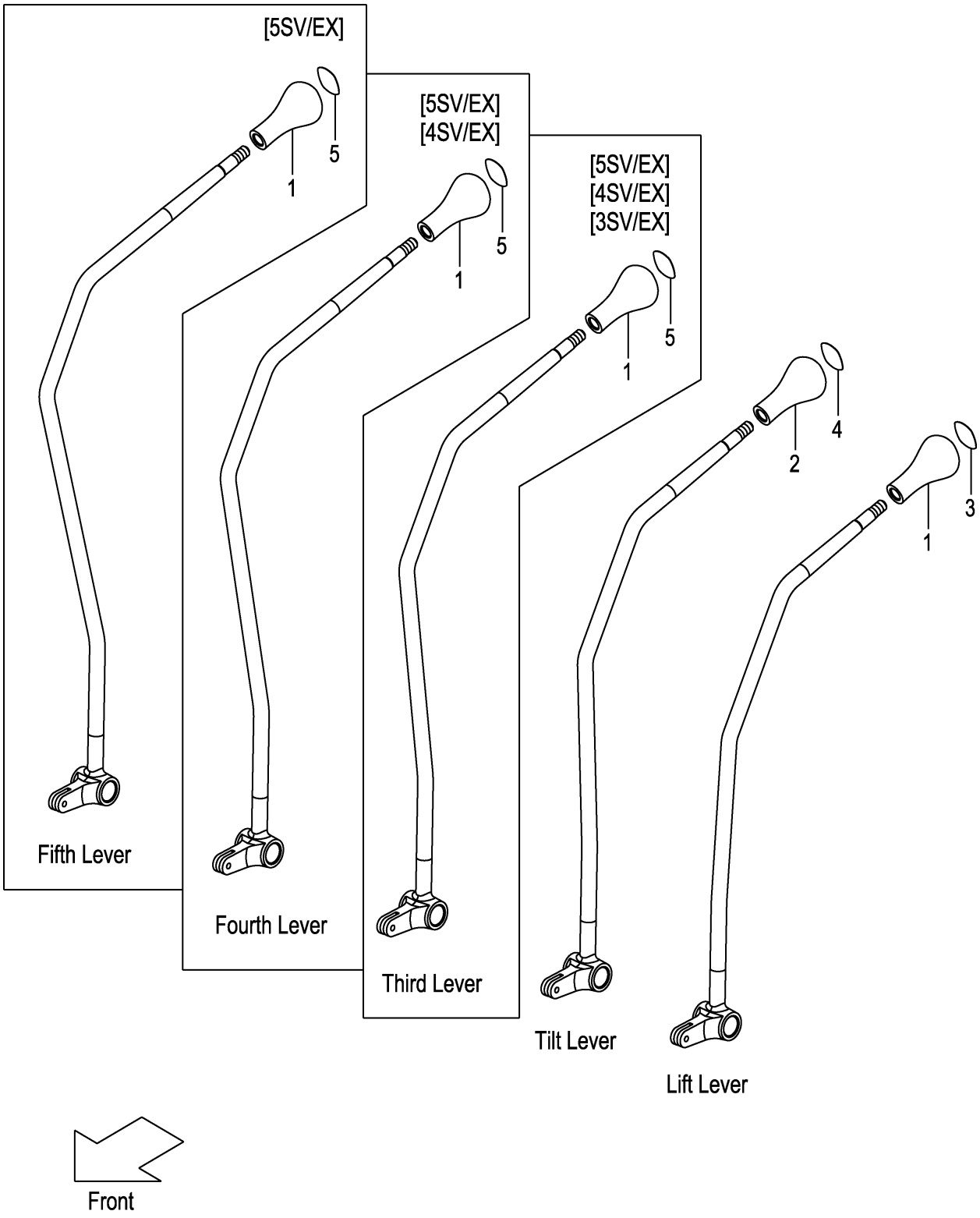

A:FD20C3Z FD20T3Z FD25C3Z FD25T3Z

Item No	Part No.	Mark	Description	Req'd	Remarks : Serial No.
1	214A7-42181		KNOB,VALVE-LEVER ﾉﾌﾞ	1	
-	214A7-42181		KNOB,VALVE-LEVER ﾉﾌﾞ	2	[3SV/EX]
-	214A7-42181		KNOB,VALVE-LEVER ﾉﾌﾞ	3	[4SV/EX]
-	214A7-42181		KNOB,VALVE-LEVER ﾉﾌﾞ	4	[5SV/EX]
2	281E7-42101		KNOB,VALVE-LEVER ﾉﾌﾞ	1	
3	214A7-42191		DECAL,SYMBOL,LIFT ﾃﾞｶﾙ	1	
4	214A7-42201		DECAL,SYMBOL,TILT ﾃﾞｶﾙ	1	
5	514A2-72411		DECAL,SYMBOL,SPACE ﾃﾞｶﾙ	1	[3SV/EX]
-	514A2-72411		DECAL,SYMBOL,SPACE ﾃﾞｶﾙ	2	[4SV/EX]
-	514A2-72411		DECAL,SYMBOL,SPACE ﾃﾞｶﾙ	3	[5SV/EX]

FIG.153 FRONT COVER

(F7Z273M0) フロントカバー

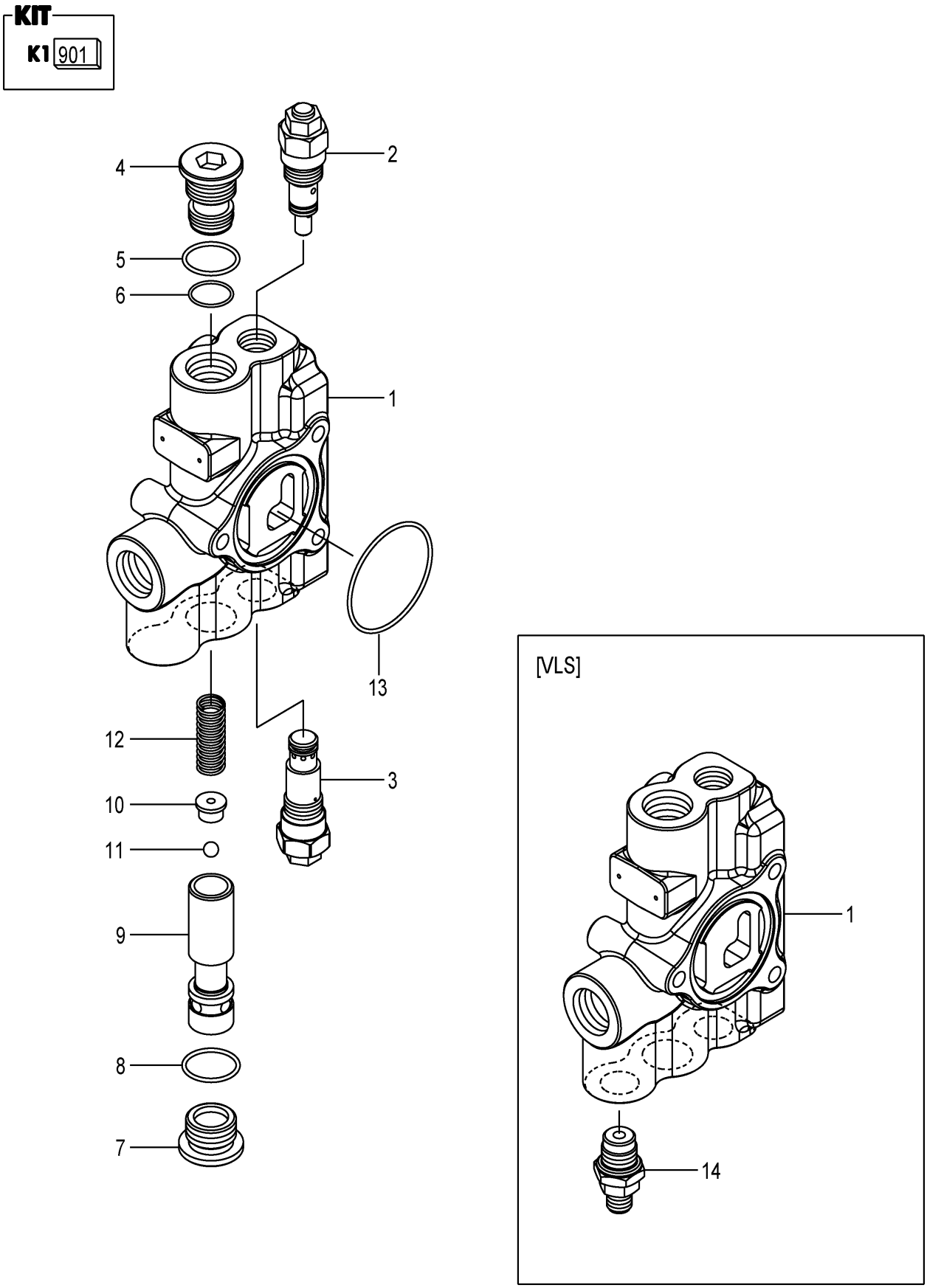

A:FD20C3Z FD20T3Z FD25C3Z FD25T3Z

Item No	Part No.	Mark	Description		Req'd	Remarks : Serial No.
A1	22N57-33011		COVER-ASSY,FRONT	ﾌﾛﾝﾄｶﾊﾞｰｱｯｾﾝ	1	INC.1-13
-	22N57-32011		COVER-ASSY,FRONT	ﾌﾛﾝﾄｶﾊﾞｰｱｯｾﾝ	1	[VLS] INC.1-10,12-14
901	22N57-33071	K1	KIT,SEAL	ｼｰﾙｷｯﾄ	1	INC.5,6,8,13
1	NO PART NO.	#	COVER,FRONT	ｶﾊﾞｰ	1	
-	NO PART NO.	#	COVER,FRONT	ｶﾊﾞｰ	1	[VLS]
2	22N57-33221		VALVE,RELIEF	ﾊﾞﾙﾌﾞ	1	
-	22N57-33321		VALVE,RELIEF	ﾊﾞﾙﾌﾞ	1	[VLS]
3	22N57-33331		VALVE,MAIN-RELIEF	ﾊﾞﾙﾌﾞ	1	
A2	22N57-33241		PLUG-ASSY,RETAINER	ﾘﾃｰﾅﾌﾟﾗｸﾞｱｯｾﾝ	1	INC.4-6
4	NO PART NO.	#	PLUG,RETAINER	ﾌﾟﾗｸﾞ	1	
5	22N57-33351	*	O-RING	Oﾘﾝｸﾞ	1	
6	22N57-33341	*	O-RING	Oﾘﾝｸﾞ	1	
A3	22N57-33251		PLUG-ASSY,FD	ﾌﾟﾗｸﾞｱｯｾﾝ	1	INC.7,8
7	NO PART NO.	#	PLUG,FD	ﾌﾟﾗｸﾞ	1	
8	22N57-33351	*	O-RING	Oﾘﾝｸﾞ	1	
9	NO PART NO.	#	SPOOL,FD	ｽﾌﾟｰﾙ	1	
-	NO PART NO.	#	SPOOL,FD	ｽﾌﾟｰﾙ	1	[VLS]
10	22N57-33271		RETAINER,BALL	ﾘﾃｰﾅ	1	
-	22N57-33371		ORIFICE,BLEED	ｵﾘﾌｨｽ	1	[VLS]
11	22N57-33281		BALL,STEEL	ﾎﾞｰﾙ	1	(WITHOUT VLS)
12	NO PART NO.	#	SPRING	ｽﾌﾟﾘﾝｸﾞ	1	
13	22N57-33751	*	O-RING	Oﾘﾝｸﾞ	1	
14	22N57-33411		CHECK,LS	ﾁｪｯｸ	1	[VLS]

FIG.154 REAR COVER [VLL][SIL]

(F7Z273N0) リヤカバー

KIT
K1 901

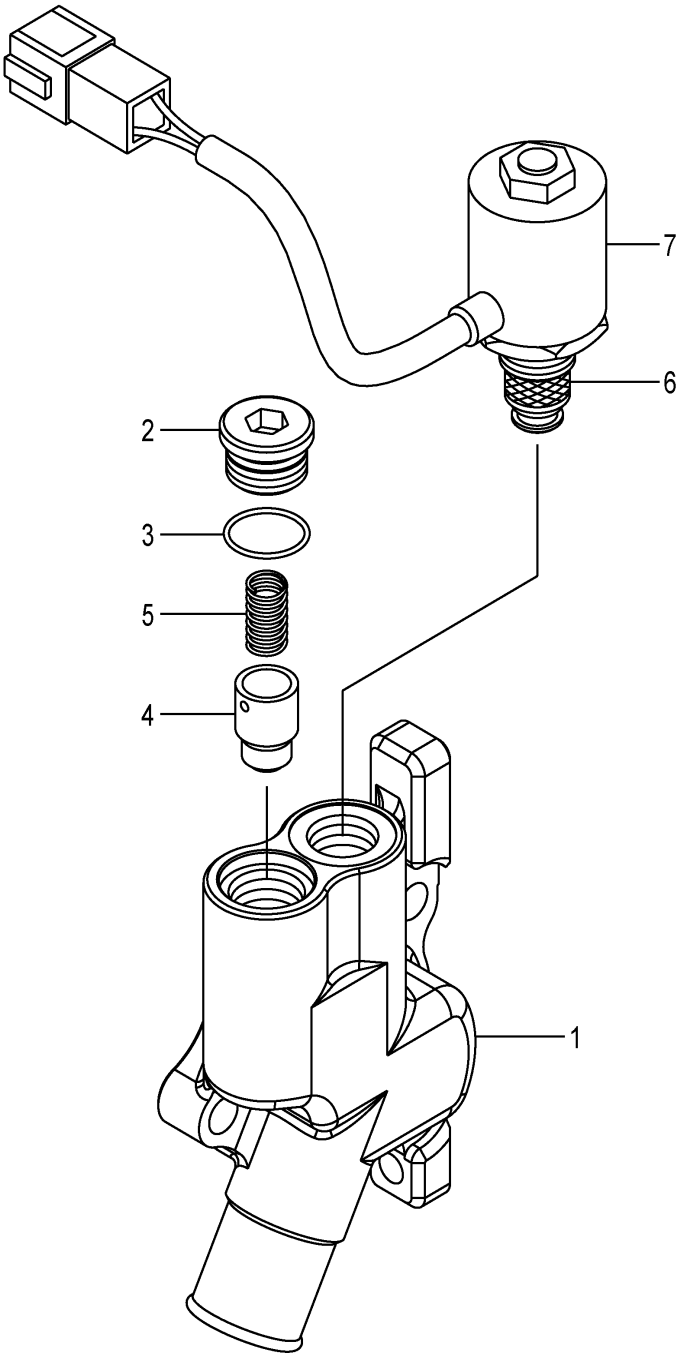

FIG.154
(F7Z273N0)

A:FD20C3Z FD20T3Z FD25C3Z FD25T3Z

Item No	Part No.	Mark	Description		Req'd	Remarks : Serial No.
A1	22N57-32021		COVER-ASSY,REAR	ﾘﾔｰｶﾊﾞｰｱｯｾﾝ	1	[VLL][SIL] INC.1-7
901	22N57-33091	K1	KIT,SEAL	ｼｰﾙｷｯﾄ	1	[VLL][SIL] INC.3
1	NO PART NO.	#	COVER,REAR	ｶﾊﾞｰ	1	[VLL][SIL]
A2	22N57-33421		PLUG-ASSY,RETAINER	ﾘﾃｰﾅﾌﾟﾗｸﾞｱｯｾﾝ	1	[VLL][SIL] INC.2,3
2	NO PART NO.	#	PLUG,RETAINER	ﾌﾟﾗｸﾞ	1	[VLL][SIL]
3	22N57-33901	*	O-RING	Oﾘﾝｸﾞ	1	[VLL][SIL]
4	NO PART NO.	#	POPPET,UNLOAD	ﾎﾟﾍﾟｯﾄ	1	[VLL][SIL]
5	22N57-33911		SPRING,LOCK-VALVE	ｽﾌﾟﾘﾝｸﾞ	1	[VLL][SIL]
A3	22N57-33451		VALVE-ASSY,SOLENOID	ｿﾚﾉｲﾄﾞﾊﾞﾙﾌﾞｱｯｾﾝ	1	[VLL][SIL] INC.6,7
6	22N57-33461		VALVE,SOLENOID	ﾊﾞﾙﾌﾞ	1	[VLL][SIL]
7	22N57-33981		COIL	ｺｲﾙ	1	[VLL][SIL]

FIG.155 COMBINATION VALVE

(F7Z273P0) コンビネーションバルブ

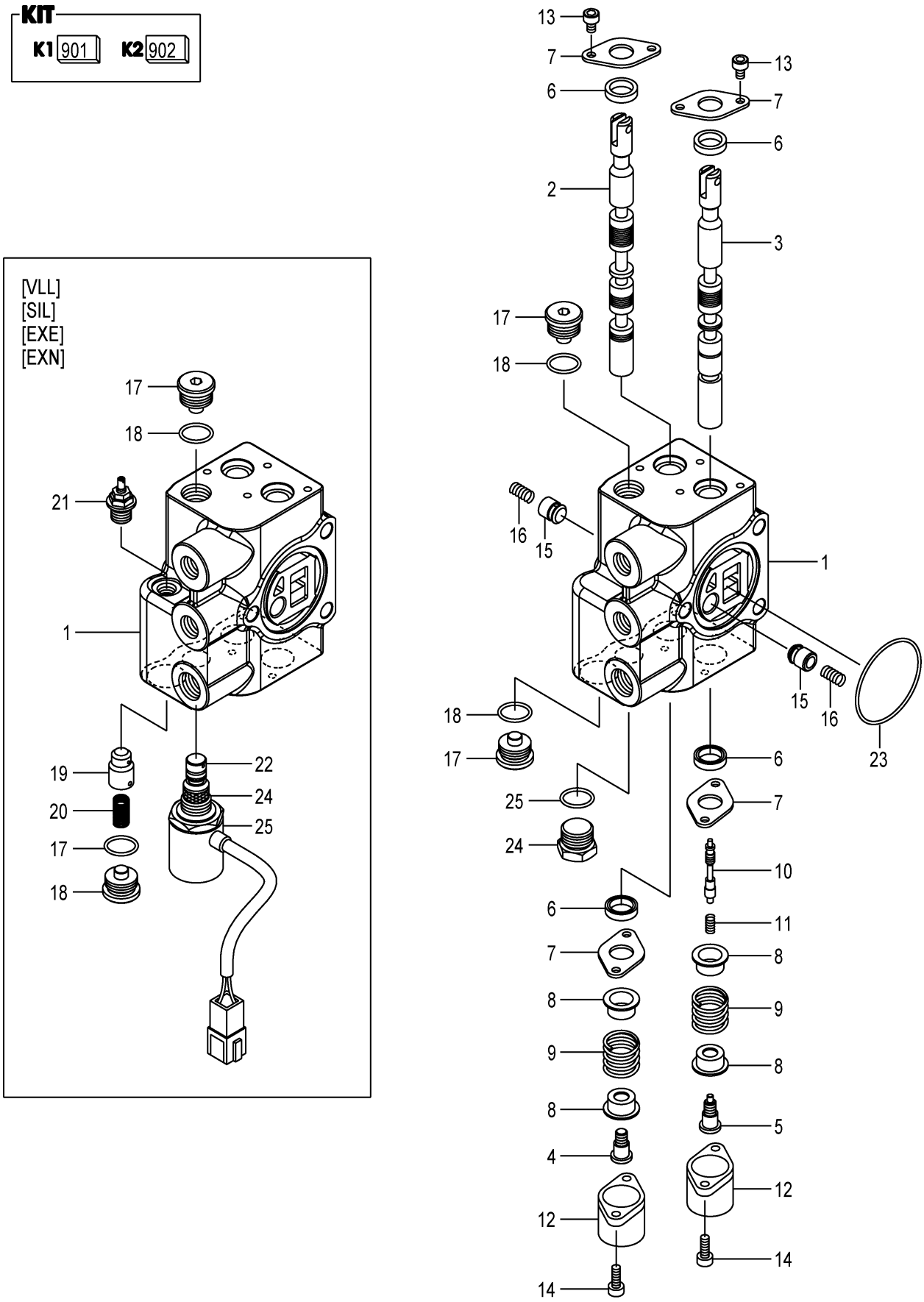

A:FD20C3Z FD20T3Z FD25C3Z FD25T3Z

Item No	Part No.	Mark	Description		Req'd	Remarks : Serial No.
A1	22N57-33031		VALVE-ASSY,COMBINATION	コンビネーションバルブアッセン	1	INC.1-18,23-25
-	22N57-32031		VALVE-ASSY,COMBINATION	コンビネーションバルブアッセン	1	[VLL][SIL] INC.1-25
901	22N57-33131	K1	KIT,SEAL	シールキット	1	INC.6,18,23,25
902	22N57-32131	K2	KIT,SEAL	シールキット	1	[VLL][SIL] INC.6,18,23
1	NO PART NO.	#	BODY,VALVE	ボディ	1	
-	NO PART NO.	#	BODY,VALVE	ボディ	1	[VLL][SIL]
2	NO PART NO.	#	SPOOL,LIFT	スプール	1	
3	NO PART NO.	#	SPOOL,TILT	スプール	1	
4	22N57-33541		SCREW,SET	スクリュ	1	
5	22N57-33551		SCREW,SET	スクリュ	1	
6	22N57-33561	*	SEAL,DUST	シール	4	
7	22N57-33571		PLATE,SEAL	プレート	4	
8	22N57-33581		RETAINER,SPRING	リテーナ	4	
9	22N57-33591		SPRING,CENTER	スプリング	2	
10	NO PART NO.	#	SPOOL,PILOT	スプール	1	
11	NO PART NO.	#	SPRING,TILT-LOCK	スプリング	1	
12	22N57-33621		CAP,DC	キャップ	2	
13	22N57-33631		BOLT	ボルト	4	
14	22N57-33651		BOLT	ボルト	4	
15	NO PART NO.	#	POPPET,LOAD-CHECK	ポペット	2	
16	22N57-33671		SPRING,LOAD-CHECK	スプリング	2	
A2	22N57-33691		PLUG-ASSY,RETAINER	リテーナプラグアッセン	2	INC.17,18
-	22N57-33891		PLUG-ASSY,RETAINER	リテーナプラグアッセン	2	[VLL][SIL] INC.17,18
17	NO PART NO.	#	PLUG,RETAINER	プラグ	2	
-	NO PART NO.	#	PLUG,RETAINER	プラグ	2	[VLL][SIL]
18	22N57-33701	*	O-RING	Oリング	2	
-	22N57-33901	*	O-RING	Oリング	2	[VLL][SIL]
19	NO PART NO.	#	POPPET,LOCK	ポペット	1	[VLL][SIL]
20	22N57-33911		SPRING,LOCK	スプリング	1	[VLL][SIL]
21	22N57-33921		EMERGENCY	エマジェンシィ	1	[VLL][SIL]
22	NO PART NO.	#	CASE,CHECK	ケース	1	[VLL][SIL]
23	22N57-33751	*	O-RING	Oリング	1	
A3	22N57-33761		PLUG-ASSY	プラグアッセン	1	INC.24,25
-	22N57-33961		VALVE-ASSY,SOLENOID	ソレノイドバルブアッセン	1	[VLL][SIL] INC.24,25
24	22N57-33771		PLUG	プラグ	1	
-	22N57-33971		VALVE,SOLENOID	バルブ	1	[VLL][SIL]
25	22N57-33771	*	O-RING	Oリング	1	
-	22N57-33981		COIL	コイル	1	[VLL][SIL]

FIG.156 VALVE SECTION [3SV][4SV][5SV]

(F7Z273Q0) ﾊﾞﾙﾌﾞｾｸｼｮﾝ

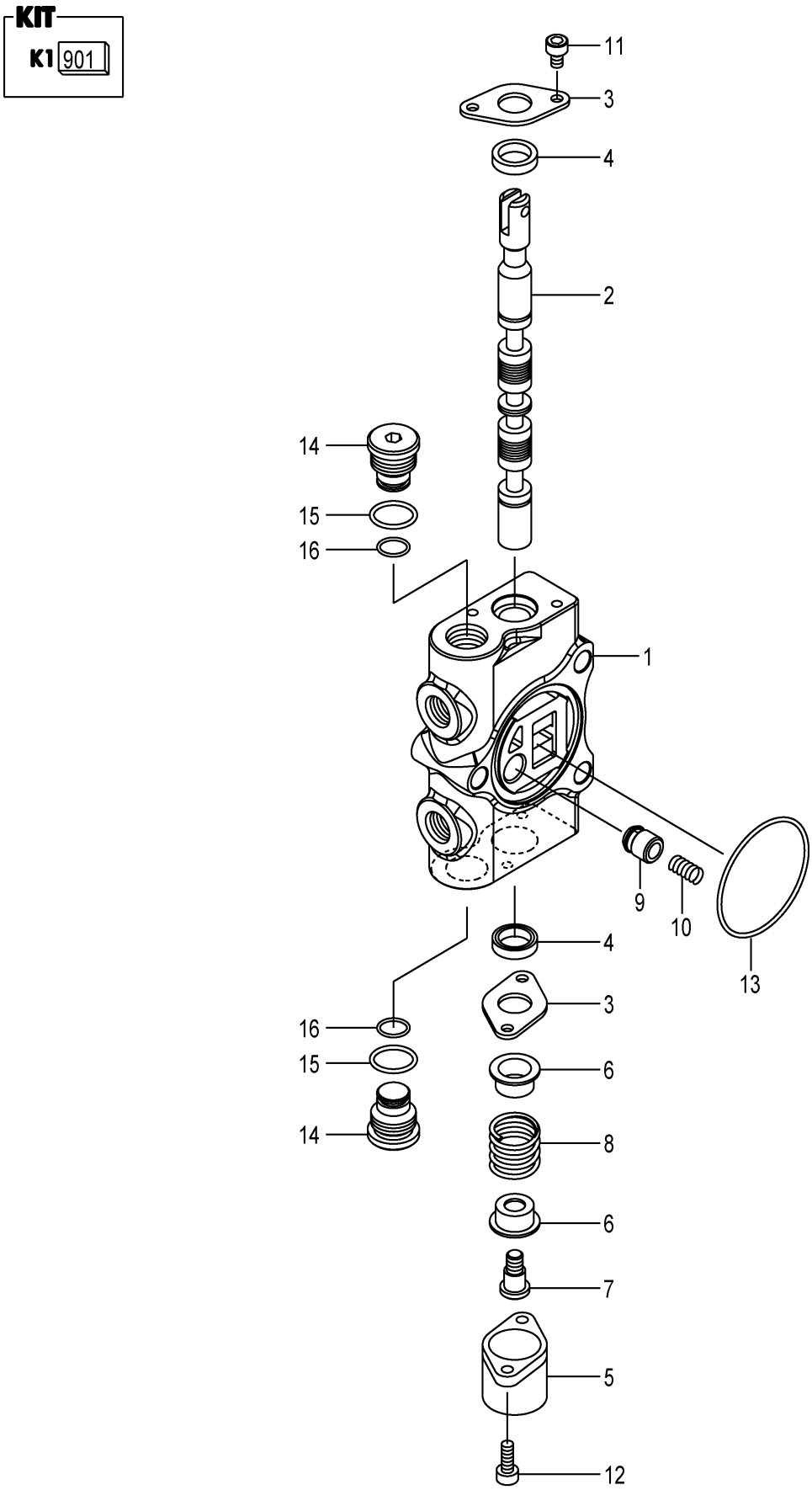

A:FD20C3Z FD20T3Z FD25C3Z FD25T3Z

Item No	Part No.	Mark	Description		Req'd	Remarks : Serial No.
A1	22N57-33041		SECTION-ASSY,VALVE	ﾊﾞﾙﾌﾞｾｸｼｮﾝｱｯｾﾝ	1	[3SV] INC.1-16
-	22N57-33041		SECTION-ASSY,VALVE	ﾊﾞﾙﾌﾞｾｸｼｮﾝｱｯｾﾝ	2	[4SV] INC.1-16
-	22N57-33041		SECTION-ASSY,VALVE	ﾊﾞﾙﾌﾞｾｸｼｮﾝｱｯｾﾝ	3	[5SV] INC.1-16
901	22N57-33081	K1	KIT,SEAL	ｼｰﾙｷｯﾄ	1	[3SV] INC.4,13,15,16
-	22N57-33081	K1	KIT,SEAL	ｼｰﾙｷｯﾄ	2	[4SV] INC.4,13,15,16
-	22N57-33081	K1	KIT,SEAL	ｼｰﾙｷｯﾄ	3	[5SV] INC.4,13,15,16
1	NO PART NO.	#	BODY	ﾎﾞﾃﾞｨ	1	[3SV]
-	NO PART NO.	#	BODY	ﾎﾞﾃﾞｨ	2	[4SV]
-	NO PART NO.	#	BODY	ﾎﾞﾃﾞｨ	3	[5SV]
2	NO PART NO.	#	SPOOL	ｽﾌﾟｰﾙ	1	[3SV]
-	NO PART NO.	#	SPOOL	ｽﾌﾟｰﾙ	2	[4SV]
-	NO PART NO.	#	SPOOL	ｽﾌﾟｰﾙ	3	[5SV]
3	22N57-33571		PLATE,SEAL	ﾌﾟﾚｰﾄ	2	[3SV]
-	22N57-33571		PLATE,SEAL	ﾌﾟﾚｰﾄ	4	[4SV]
-	22N57-33571		PLATE,SEAL	ﾌﾟﾚｰﾄ	6	[5SV]
4	22N57-33561	*	SEAL,DUST	ｼｰﾙ	2	[3SV]
-	22N57-33561	*	SEAL,DUST	ｼｰﾙ	4	[4SV]
-	22N57-33561	*	SEAL,DUST	ｼｰﾙ	6	[5SV]
5	22N57-33621		CAP	ｷｬｯﾌﾟ	1	[3SV]
-	22N57-33621		CAP	ｷｬｯﾌﾟ	2	[4SV]
-	22N57-33621		CAP	ｷｬｯﾌﾟ	3	[5SV]
6	22N57-33581		RETAINER,SPRING	ﾘﾃｰﾅ	2	[3SV]
-	22N57-33581		RETAINER,SPRING	ﾘﾃｰﾅ	4	[4SV]
-	22N57-33581		RETAINER,SPRING	ﾘﾃｰﾅ	6	[5SV]
7	22N57-33541		SCREW,SET	ｽｸﾘｭ	1	[3SV]
-	22N57-33541		SCREW,SET	ｽｸﾘｭ	2	[4SV]
-	22N57-33541		SCREW,SET	ｽｸﾘｭ	3	[5SV]
8	22N57-33591		SPRING,CENTER	ｽﾌﾟﾘﾝｸﾞ	1	[3SV]
-	22N57-33591		SPRING,CENTER	ｽﾌﾟﾘﾝｸﾞ	2	[4SV]
-	22N57-33591		SPRING,CENTER	ｽﾌﾟﾘﾝｸﾞ	3	[5SV]
9	NO PART NO.	#	POPPET,LOAD-CHECK	ﾎﾟﾍﾟｯﾄ	1	[3SV]
-	NO PART NO.	#	POPPET,LOAD-CHECK	ﾎﾟﾍﾟｯﾄ	2	[4SV]
-	NO PART NO.	#	POPPET,LOAD-CHECK	ﾎﾟﾍﾟｯﾄ	3	[5SV]
10	22N57-33671		SPRING,LOAD-CHECK	ｽﾌﾟﾘﾝｸﾞ	1	[3SV]
-	22N57-33671		SPRING,LOAD-CHECK	ｽﾌﾟﾘﾝｸﾞ	2	[4SV]
-	22N57-33671		SPRING,LOAD-CHECK	ｽﾌﾟﾘﾝｸﾞ	3	[5SV]
11	22N57-33631		BOLT	ﾎﾞﾙﾄ	2	[3SV]
-	22N57-33631		BOLT	ﾎﾞﾙﾄ	4	[4SV]
-	22N57-33631		BOLT	ﾎﾞﾙﾄ	6	[5SV]
12	22N57-33651		BOLT	ﾎﾞﾙﾄ	2	[3SV]
-	22N57-33651		BOLT	ﾎﾞﾙﾄ	4	[4SV]
-	22N57-33651		BOLT	ﾎﾞﾙﾄ	6	[5SV]
13	22N57-33751	*	O-RING	Oﾘﾝｸﾞ	1	[3SV]
-	22N57-33751	*	O-RING	Oﾘﾝｸﾞ	2	[4SV]
-	22N57-33751	*	O-RING	Oﾘﾝｸﾞ	3	[5SV]
A2	22N57-33641		PLUG-ASSY,SHUT-OFF	ｼｬｯﾄｵﾌﾌﾟﾗｸﾞｱｯｾﾝ	2	[3SV] INC.14-16
-	22N57-33641		PLUG-ASSY,SHUT-OFF	ｼｬｯﾄｵﾌﾌﾟﾗｸﾞｱｯｾﾝ	4	[4SV] INC.14-16
-	22N57-33641		PLUG-ASSY,SHUT-OFF	ｼｬｯﾄｵﾌﾌﾟﾗｸﾞｱｯｾﾝ	6	[5SV] INC.14-16
14	NO PART NO.	#	PLUG,SHUT-OFF	ﾌﾟﾗｸﾞ	2	[3SV]
-	NO PART NO.	#	PLUG,SHUT-OFF	ﾌﾟﾗｸﾞ	4	[4SV]

FIG.156 VALVE SECTION [3SV][4SV][5SV]

(F7Z273Q0) ﾊﾞﾙﾌﾞｾｸｼｮﾝ

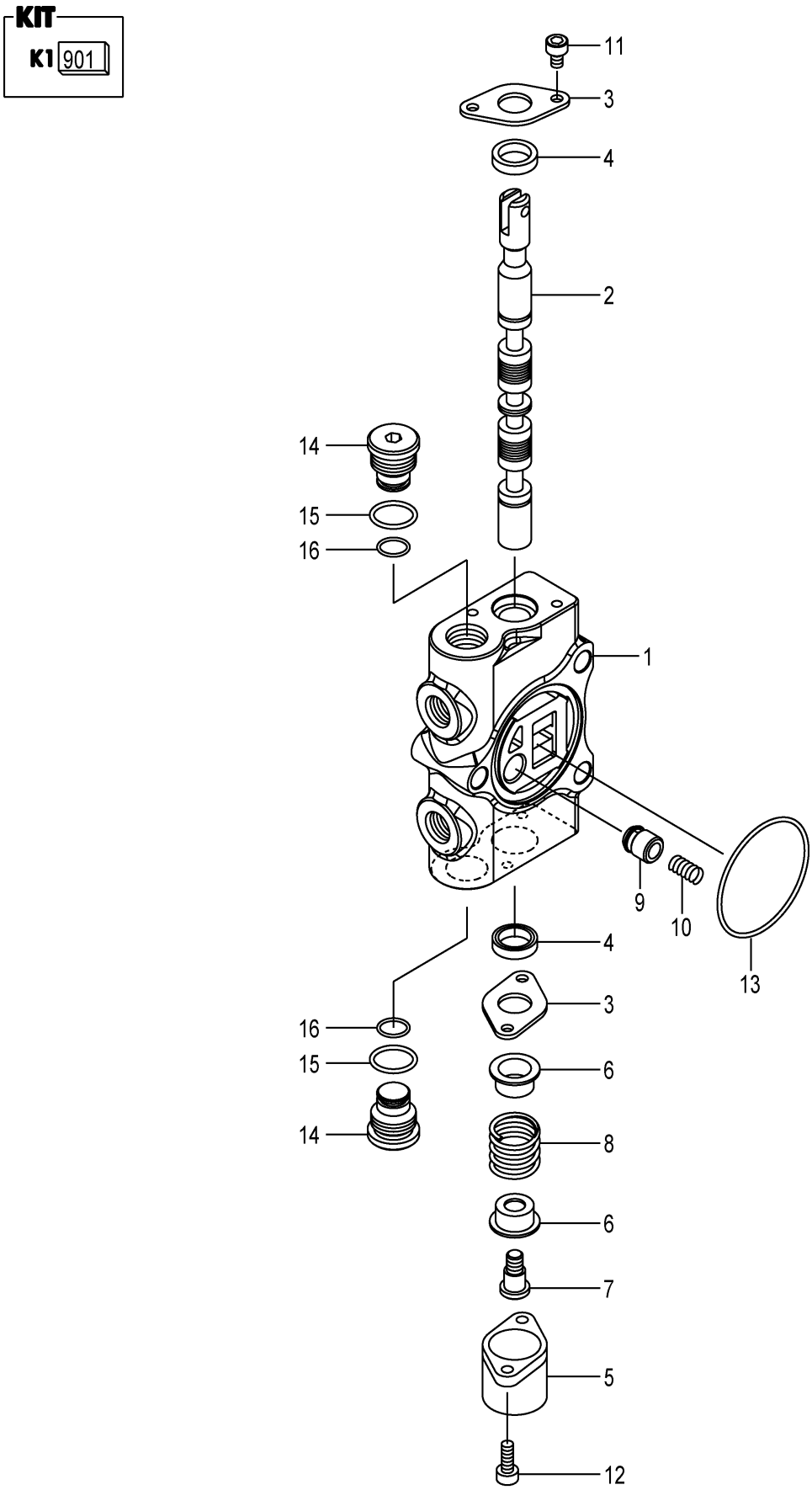

A:FD20C3Z FD20T3Z FD25C3Z FD25T3Z

Item No	Part No.	Mark	Description		Req'd	Remarks : Serial No.
-	NO PART NO.	#	PLUG,SHUT-OFF	ﾌﾟﾗｸﾞ	6	[5SV]
15	22N57-33901	*	O-RING	Oﾘﾝｸﾞ	2	[3SV]
-	22N57-33901	*	O-RING	Oﾘﾝｸﾞ	4	[4SV]
-	22N57-33901	*	O-RING	Oﾘﾝｸﾞ	6	[5SV]
16	22N57-33661	*	O-RING	Oﾘﾝｸﾞ	2	[3SV]
-	22N57-33661	*	O-RING	Oﾘﾝｸﾞ	4	[4SV]
-	22N57-33661	*	O-RING	Oﾘﾝｸﾞ	6	[5SV]

FIG.157 HYDRAULIC LINE (MAIN)(1/4)

(F7Z27630) ﾊｲﾄﾞﾛﾘｯｸﾗｲﾝ(ﾒｲﾝ)(1/4)

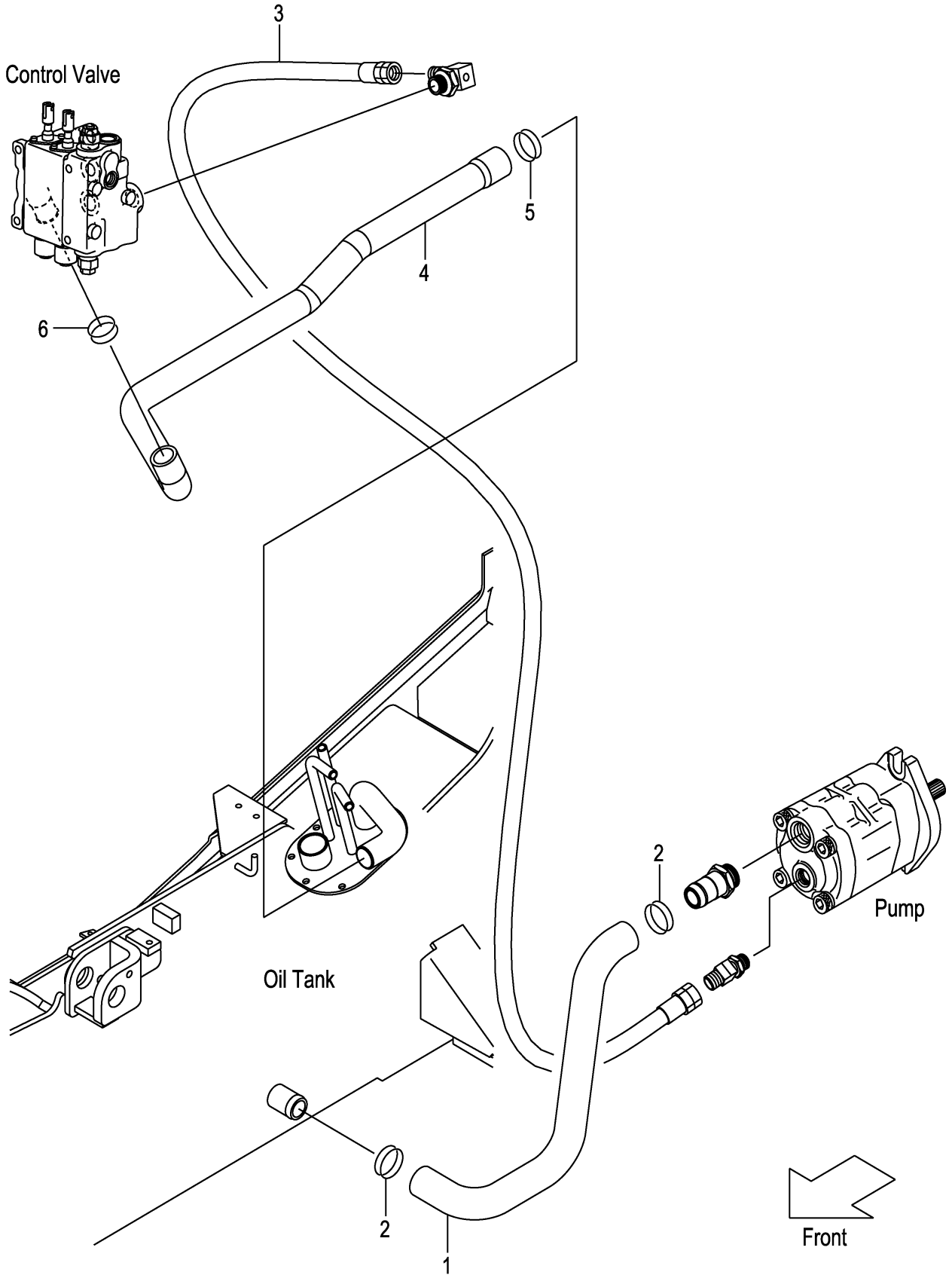

FIG.157

(F7Z27630)

A:FD20C3Z FD20T3Z FD25C3Z FD25T3Z

Item No	Part No.	Mark	Description		Req'd	Remarks : Serial No.
1	22U57-62001		HOSE,SUCTION	ﾎｰｽ	1	
2	04911-00046		CLIP	ｸﾘｯﾌﾟ	2	
3	04691-04123		HOSE	ﾎｰｽ	1	
4	22N57-62101		HOSE,RETURN	ﾎｰｽ	1	
-	22N57-62201		HOSE,RETURN	ﾎｰｽ	1	[4SV][5SV]
5	04911-00042		CLIP	ｸﾘｯﾌﾟ	1	
6	04911-00040		CLIP	ｸﾘｯﾌﾟ	1	

FIG.158 HYDRAULIC LINE (MAIN)(2/4)

(F7Z27650) ﾊｲﾄﾞﾛﾘｯｸﾗｲﾝ(ﾒｲﾝ)(2/4)

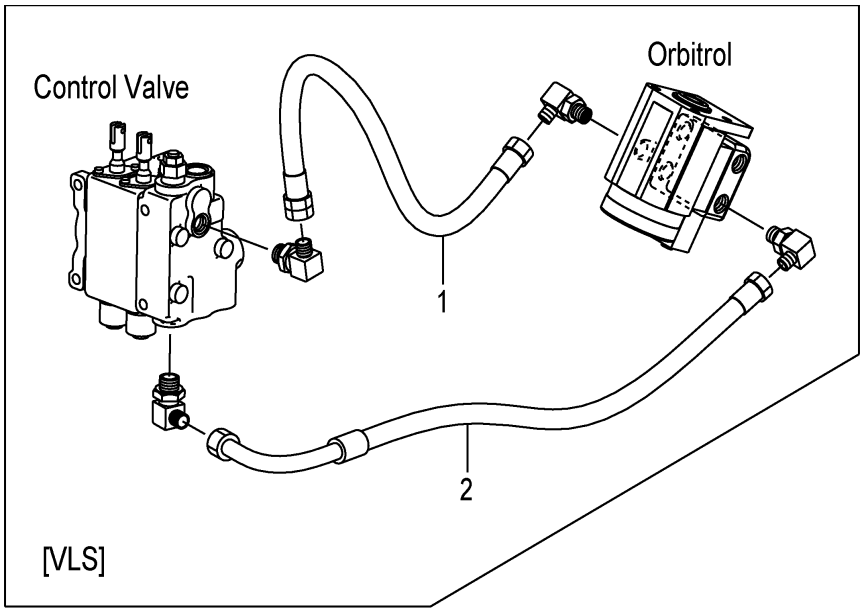

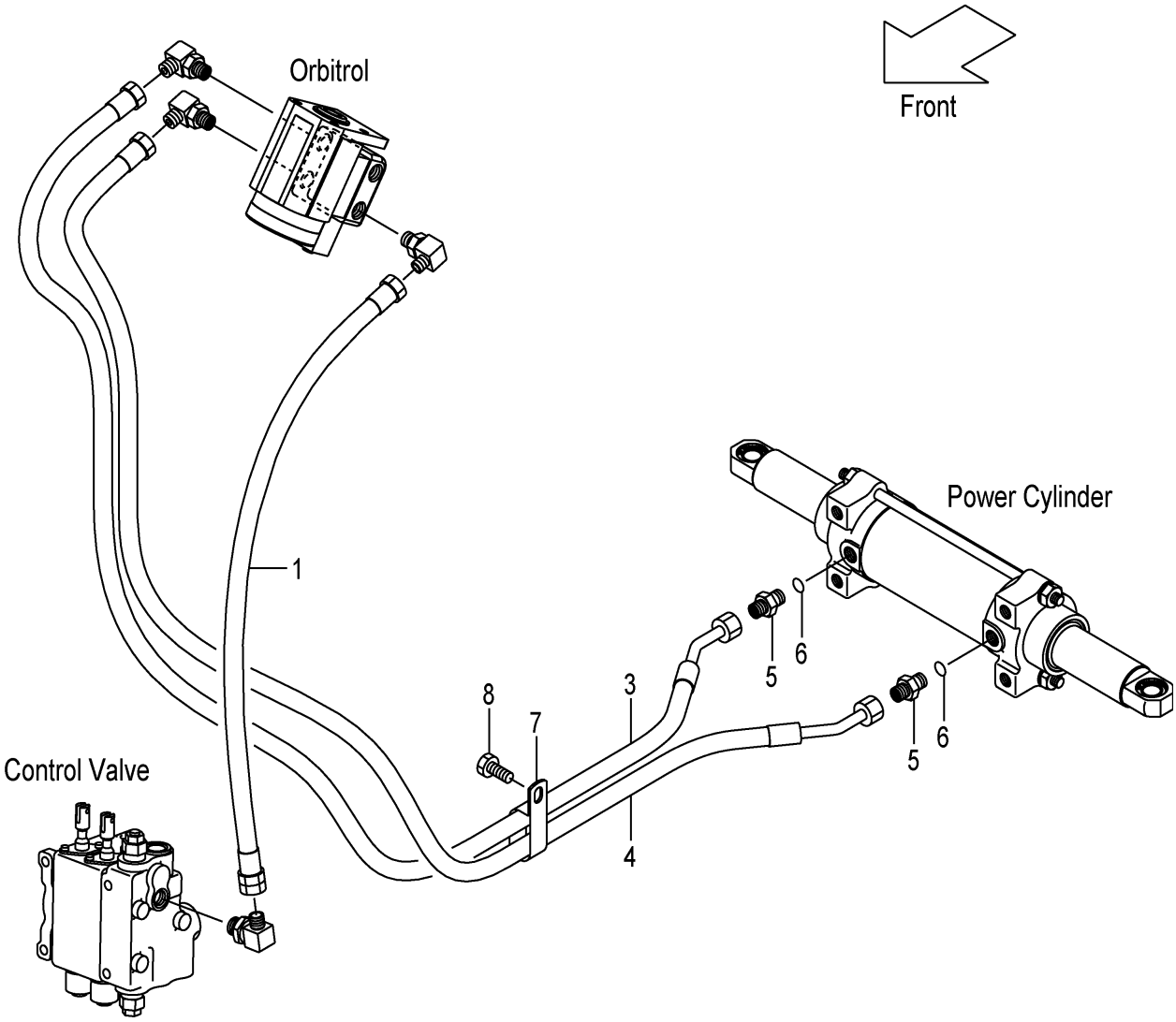

A:FD20C3Z FD20T3Z FD25C3Z FD25T3Z

Item No	Part No.	Mark	Description		Req'd	Remarks : Serial No.
1	04691-02038		HOSE	ﾎｰｽ	1	
-	04691-02035		HOSE	ﾎｰｽ	1	[VLS]
2	22N57-62801		HOSE	ﾎｰｽ	1	[VLS]
3	22N57-62381		HOSE,PS,FRONT	ﾎｰｽ	1	
4	22N57-62391		HOSE,PS,FRONT	ﾎｰｽ	1	
A1	04134-20303		NIPPLE-ASSY	ﾆｯﾌﾟﾙｱｯｾﾝ	2	INC.5,6
5	NO PART NO.	#	NIPPLE	ﾆｯﾌﾟﾙ	2	
6	03320-00140		O-RING	Oﾘﾝｸﾞ	2	
7	26602-42221		CLIP	ｸﾘｯﾌﾟ	1	
8	01185-08016		BOLT	ﾎﾞﾙﾄ	1	

FIG.159 HYDRAULIC LINE (MAIN)(3/4)

(F7Z27660) ﾊｲﾄﾞﾛﾘｯｸﾗｲﾝ(ﾒｲﾝ)(3/4)

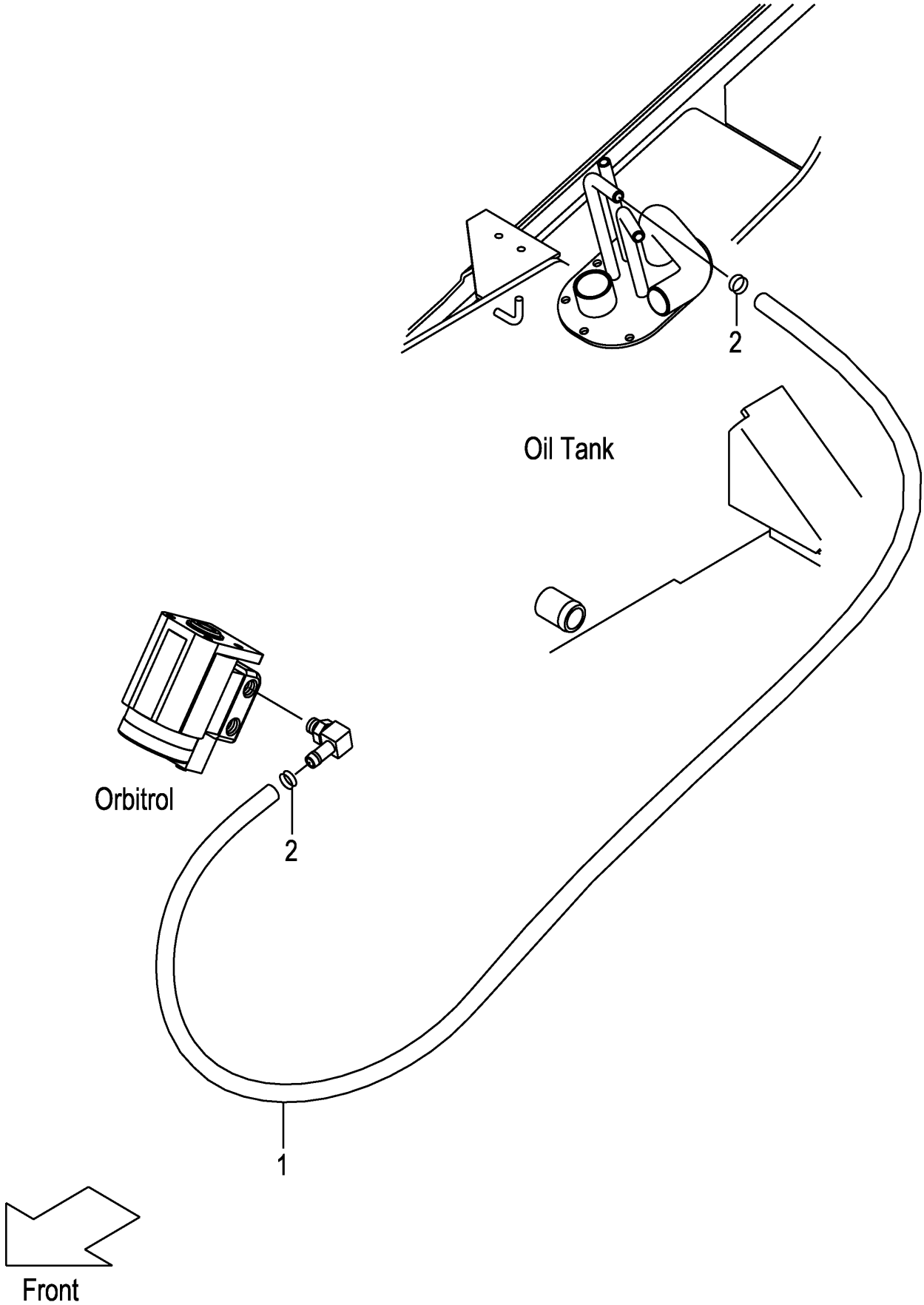

FIG.159

(F7Z27660)

A:FD20C3Z FD20T3Z FD25C3Z FD25T3Z

Item No	Part No.	Mark	Description	Req'd	Remarks : Serial No.
1	04710-04190		HOSE ﾎｰｽ	1	
2	04911-00020		CLIP ｸﾘｯﾌﾟ	2	

FIG.160 HYDRAULIC LINE (MAIN)(4/4)

(F7Z27690) ﾊｲﾄﾞﾛﾘｯｸﾗｲﾝ(ﾒｲﾝ)(4/4)

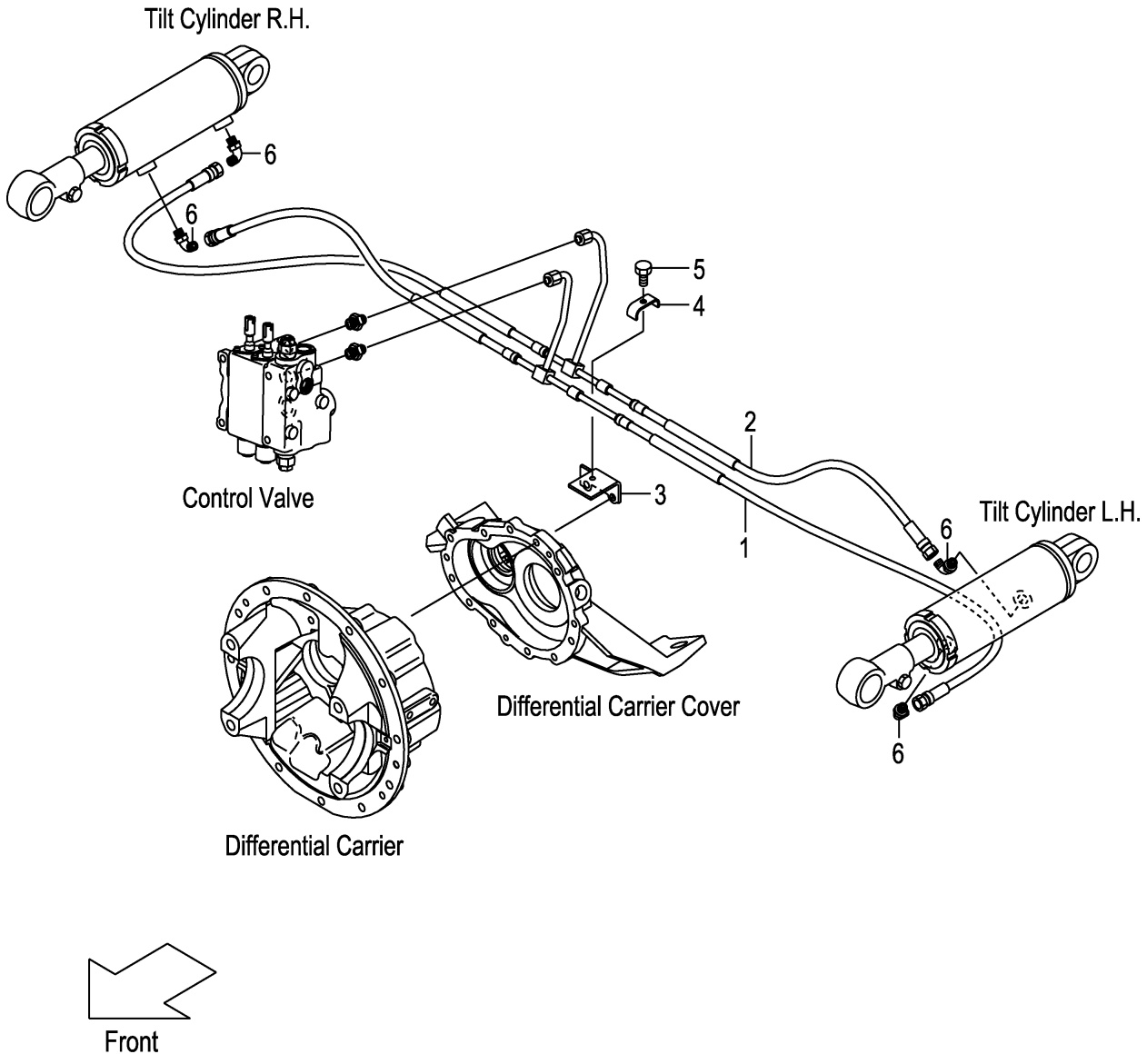

FIG.160

(F7Z27690)

A:FD20C3Z FD20T3Z FD25C3Z FD25T3Z

Item No	Part No.	Mark	Description		Req'd	Remarks : Serial No.
1	22N57-62401		HOSE,TILT,FRONT	ﾎｰｽ	1	
2	22N57-62451		HOSE,TILT,REAR	ﾎｰｽ	1	
3	22N57-62531		BRACKET,TILT-PIPE	ﾌﾞﾗｹｯﾄ	1	
4	281E7-62041		CLIP,HOSE	ｸﾘｯﾌﾟ	1	
5	01183-08025		BOLT	ﾎﾞﾙﾄ	1	
6	22N57-62221		ELBOW	ｴﾙﾎﾞ	4	

FIG.161 HYDRAULIC LINE (TOR-CON)

(F7Z276A0) ﾊｲﾄﾞﾛﾘｯｸﾗｲﾝ(ﾄﾙｺﾝ)

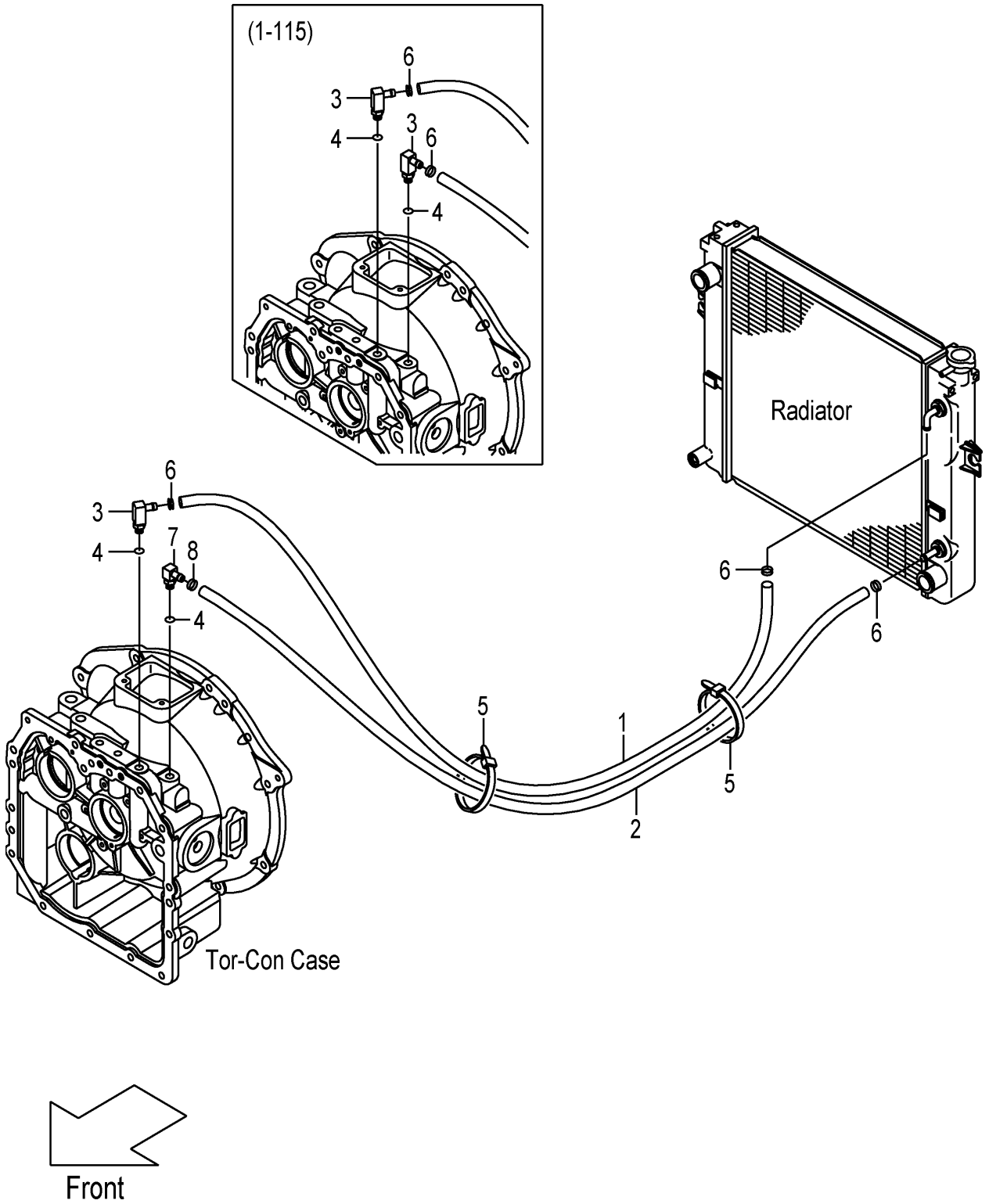

A:FD20T3Z FD25T3Z

Item No	Part No.	Mark	Description		Req'd	Remarks : Serial No.
1	216H7-82111		HOSE,OIL-COOLER	ﾎｰｽ	1	
2	22S57-82001		HOSE,OIL-COOLER	ﾎｰｽ	1	
A1	22N57-80201		FITTING-ASSY,HOSE	ﾎｰｽﾌｨｯﾃｨﾝｸﾞｱｯｾﾝ	2	1-115
						INC.3,4
-	22N57-80201		FITTING-ASSY,HOSE	ﾎｰｽﾌｨｯﾃｨﾝｸﾞｱｯｾﾝ	1	116-
						INC.3,4
3	NO PART NO.	#	FITTING,HOSE	ﾌｨｯﾃｨﾝｸﾞ	2	1-115
-	NO PART NO.	#	FITTING,HOSE	ﾌｨｯﾃｨﾝｸﾞ	1	116-
4	03320-00140		O-RING	Oﾘﾝｸﾞ	2	1-115
-	03320-00140		O-RING	Oﾘﾝｸﾞ	1	116-
5	27042-42322		BAND	ﾊﾞﾝﾄﾞ	2	
6	04911-00023		CLIP	ｸﾘｯﾌﾟ	4	
A2	22N57-80301		FITTING-ASSY,HOSE	ﾎｰｽﾌｨｯﾃｨﾝｸﾞｱｯｾﾝ	1	116-
						INC.7,8
7	NO PART NO.	#	FITTING,HOSE	ﾌｨｯﾃｨﾝｸﾞ	1	116-
8	03320-00140		O-RING	Oﾘﾝｸﾞ	1	116-

FIG.162 TILT CYLINDER

(F7Z28510) ﾃｨﾙﾄｼﾘﾝﾀﾞ

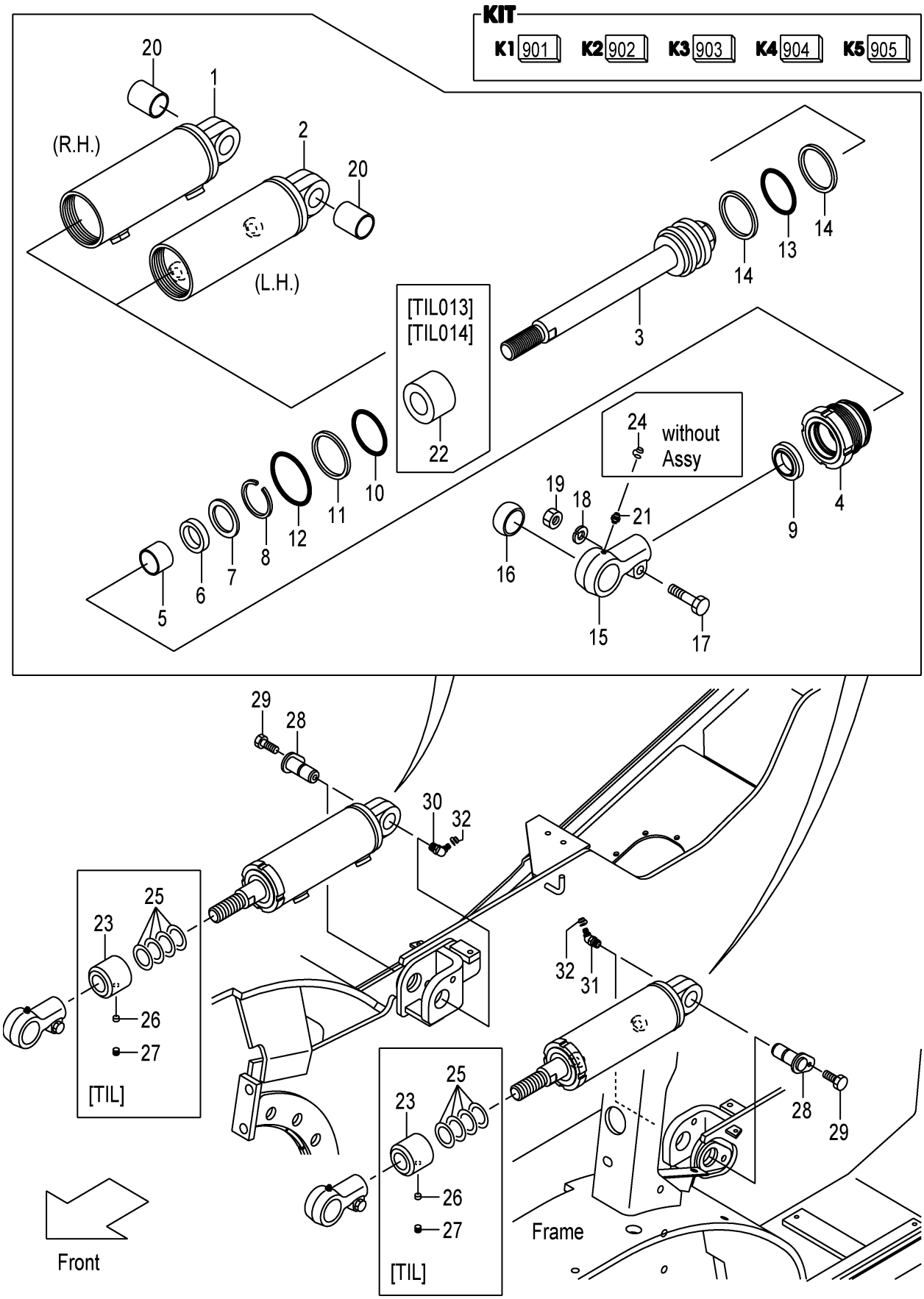

A:FD20C3Z FD20T3Z FD25C3Z FD25T3Z:1-118

Item No	Part No.	Mark	Description		Req'd	Remarks : Serial No.
A1	22N58-50401		CYL-ASSY,TILT,RH	ﾃｨﾙﾄｼﾘﾝﾀﾞｱｯｾﾝ	1	(6-12 DEG.) INC.1,3-21
-	22N58-50131		CYL-ASSY,TILT,RH	ﾃｨﾙﾄｼﾘﾝﾀﾞｱｯｾﾝ	1	[TIL013](3-3 DEG.) INC.1,3-23
-	22N58-50121		CYL-ASSY,TILT,RH	ﾃｨﾙﾄｼﾘﾝﾀﾞｱｯｾﾝ	1	[TIL014](3-6 DEG.) INC.1,3-23
-	22N58-50111		CYL-ASSY,TILT,RH	ﾃｨﾙﾄｼﾘﾝﾀﾞｱｯｾﾝ	1	[TIL016](6-6 DEG.) INC.1,3-21,23
-	22N58-50141		CYL-ASSY,TILT,RH	ﾃｨﾙﾄｼﾘﾝﾀﾞｱｯｾﾝ	1	[TIL017](6-10 DEG.) INC.1,3-21,23
A2	22N58-50501		CYL-ASSY,TILT,LH	ﾃｨﾙﾄｼﾘﾝﾀﾞｱｯｾﾝ	1	(6-12 DEG.) INC.2-21
-	22N58-50231		CYL-ASSY,TILT,LH	ﾃｨﾙﾄｼﾘﾝﾀﾞｱｯｾﾝ	1	[TIL013](3-3 DEG.) INC.2-23
-	22N58-50221		CYL-ASSY,TILT,LH	ﾃｨﾙﾄｼﾘﾝﾀﾞｱｯｾﾝ	1	[TIL014](3-6 DEG.) INC.2-23
-	22N58-50211		CYL-ASSY,TILT,LH	ﾃｨﾙﾄｼﾘﾝﾀﾞｱｯｾﾝ	1	[TIL016](6-6 DEG.) INC.2-21,23
-	22N58-50241		CYL-ASSY,TILT,LH	ﾃｨﾙﾄｼﾘﾝﾀﾞｱｯｾﾝ	1	[TIL017](6-10 DEG.) INC.2-21,23
901	22N58-52921	K1	KIT,REPAIR,CYL	ｼﾘﾝﾀﾞﾘﾍﾟｱｷｯﾄ	2	INC.6,9-14
902	22N58-52901	K2	KIT,CYL-BODY,RH	ｼﾘﾝﾀﾞﾎﾞﾃﾞｨｷｯﾄ	1	INC.1,20
903	22N58-52911	K3	KIT,CYL-BODY,LH	ｼﾘﾝﾀﾞﾎﾞﾃﾞｨｷｯﾄ	1	INC.2,20
904	22N58-52931	K4	KIT,ROD-HEAD	ﾛｯﾄﾞﾍｯﾄﾞｷｯﾄ	2	INC.15,16
905	22N58-52941	K5	KIT,CYL-HEAD	ｼﾘﾝﾀﾞﾍｯﾄﾞｷｯﾄ	2	INC.4,5
1	NO PART NO.	#*	BODY,CYL,RH	ﾎﾞﾃﾞｨ	1	
2	NO PART NO.	#*	BODY,CYL,LH	ﾎﾞﾃﾞｨ	1	
3	22N58-52801		ROD,PISTON	ﾛｯﾄﾞ	2	
4	NO PART NO.	#*	HEAD,CYL	ﾍｯﾄﾞ	2	
5	NO PART NO.	#*	BUSHING	ﾌﾞｯｼﾝｸﾞ	2	
6	NO PART NO.	#*	U-RING	Uﾘﾝｸﾞ	2	
7	22N58-52811		SPACER	ｽﾍﾟｰｻ	2	
8	22N58-52821		RING,SNAP	ﾘﾝｸﾞ	2	
9	NO PART NO.	#*	RING,WIPER	ﾘﾝｸﾞ	2	
10	NO PART NO.	#*	O-RING	Oﾘﾝｸﾞ	2	
11	NO PART NO.	#*	RING,BACK-UP	ﾘﾝｸﾞ	2	
12	NO PART NO.	#*	O-RING	Oﾘﾝｸﾞ	2	
13	NO PART NO.	#*	O-RING	Oﾘﾝｸﾞ	2	
14	NO PART NO.	#*	RING,BACK-UP	ﾘﾝｸﾞ	4	
15	NO PART NO.	#*	HEAD,ROD	ﾍｯﾄﾞ	2	
16	NO PART NO.	#*	BUSHING,PIN	ﾌﾞｯｼﾝｸﾞ	2	
17	22N58-52831		BOLT	ﾎﾞﾙﾄ	2	
18	22N58-52841		WASHER	ﾜｯｼｬ	2	
19	22N58-52851		NUT	ﾅｯﾄ	2	
20	NO PART NO.	#*	BUSHING,PIN	ﾌﾞｯｼﾝｸﾞ	2	
21	22N58-52861		NIPPLE,GREASE	ﾆｯﾌﾟﾙ	2	
22	22N58-52871		SPACER	ｽﾍﾟｰｻ	2	[TIL013][TIL014] (3-3,3-6 DEG.)
23	22N58-52111		SPACER	ｽﾍﾟｰｻ	2	[TIL013](3-3 DEG.)
-	22N58-52101		SPACER	ｽﾍﾟｰｻ	2	[TIL014][TIL016] (3-6,6-6 DEG.)
-	22N58-52121		SPACER	ｽﾍﾟｰｻ	2	[TIL017](6-10 DEG.)
24	22199-12401		CAP,NIPPLE	ｷｬｯﾌﾟ	2	
25	23658-52101		SHIM,T-0.5	ｼﾑ	8	[TIL013][TIL014] (3-3,3-6 DEG.)
-	23658-52101		SHIM,T-0.5	ｼﾑ	8	[TIL016][TIL017] (6-6,6-10 DEG.)

FIG.162 TILT CYLINDER

(F7Z28510) ﾃｨﾙﾄｼﾘﾝﾀﾞ

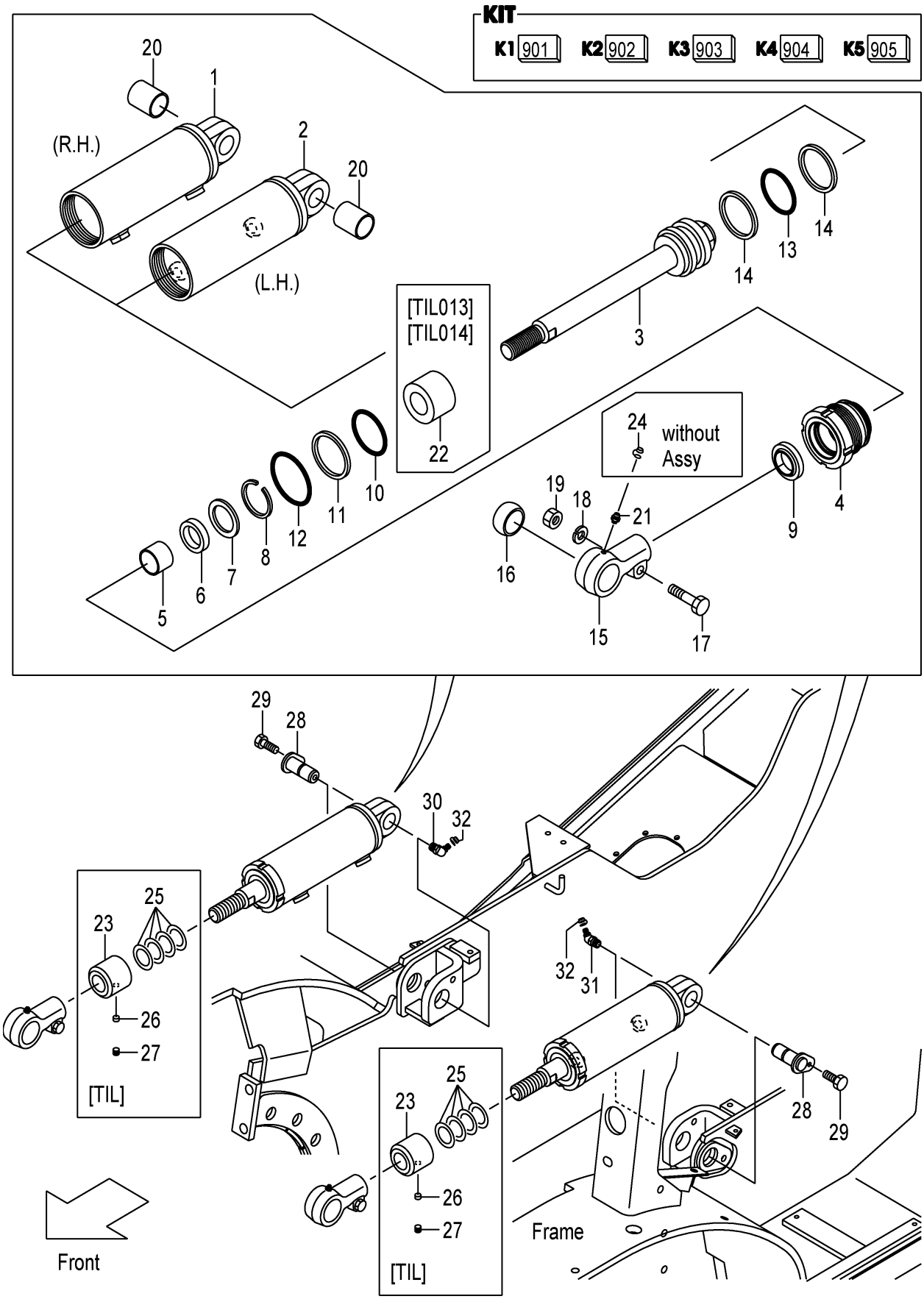

A:FD20C3Z FD20T3Z FD25C3Z FD25T3Z:1-118

Item No	Part No.	Mark	Description		Req'd	Remarks : Serial No.
26	01066-10012		SCREW,SET	ｽｸﾘｭ	2	[TIL013][TIL014] (3-3,3-6 DEG.)
-	01066-10012		SCREW,SET	ｽｸﾘｭ	2	[TIL016][TIL017] (6-6,6-10 DEG.)
27	23658-52401		PLUG,NYLON	ﾌﾟﾗｸﾞ	2	[TIL013][TIL014] (3-3,3-6 DEG.)
-	23658-52401		PLUG,NYLON	ﾌﾟﾗｸﾞ	2	[TIL016][TIL017] (6-6,6-10 DEG.)
28	22N58-52301		PIN	ﾋﾟﾝ	2	
29	01186-10016		BOLT	ﾎﾞﾙﾄ	2	
30	04901-00160		FITTING	ﾌｨｯﾃｨﾝｸﾞ	1	
31	22N58-52201		FITTING	ﾌｨｯﾃｨﾝｸﾞ	1	
32	22199-12401		CAP,NIPPLE	ｷｬｯﾌﾟ	2	

FIG.162A TILT CYLINDER

(F7Z28511) ﾃｨﾙﾄｼﾘﾝﾀﾞ

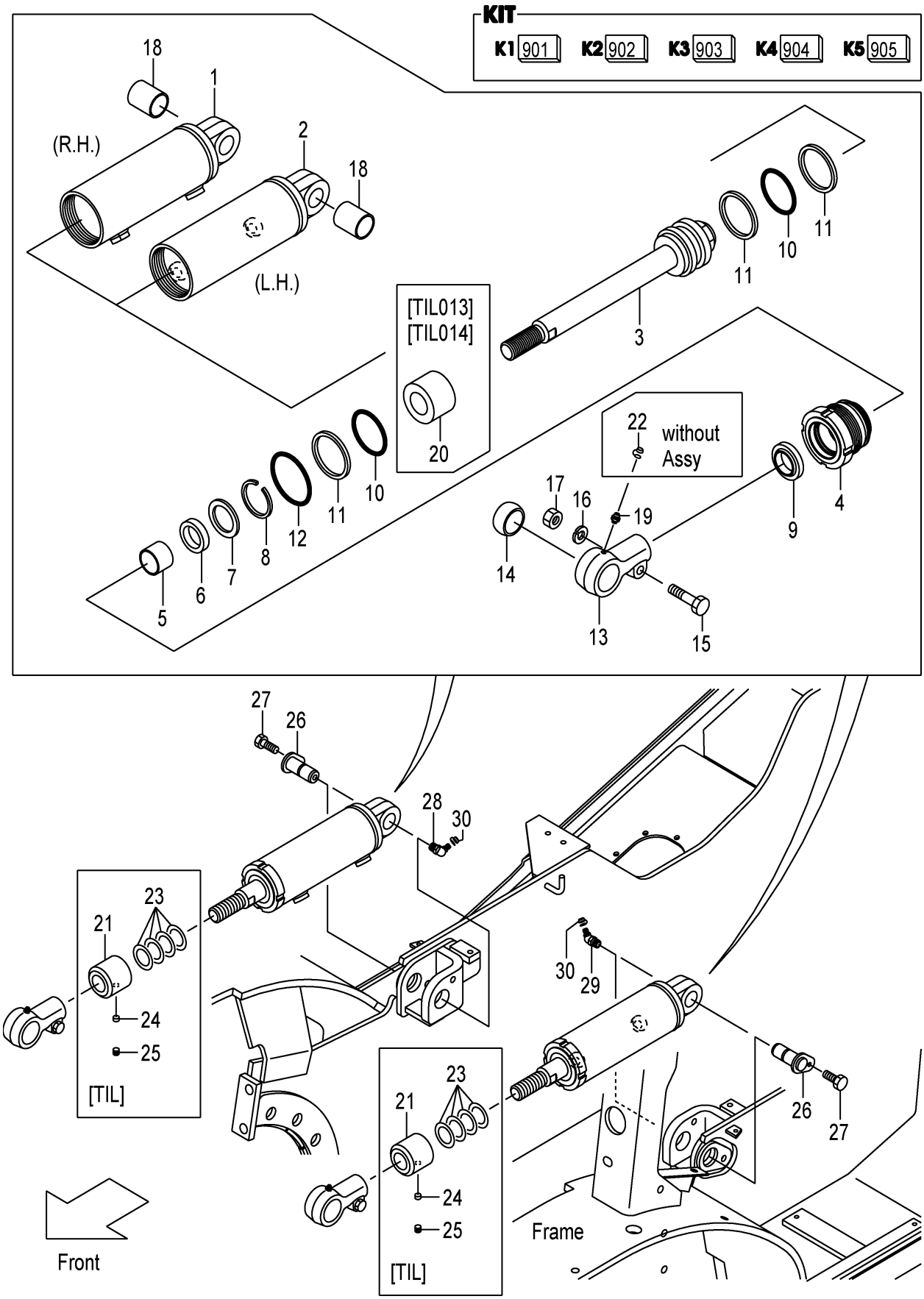

A:FD20C3Z FD20T3Z FD25C3Z FD25T3Z:119-

Item No	Part No.	Mark	Description		Req'd	Remarks : Serial No.
A1	22N48-50101		CYL-ASSY,TILT,RH	ﾃｨﾙﾄｼﾘﾝﾀﾞｱｯｾﾝ	1	(6-12 DEG.) INC.1,3-19
-	22N48-50031		CYL-ASSY,TILT,RH	ﾃｨﾙﾄｼﾘﾝﾀﾞｱｯｾﾝ	1	[TIL013](3-3 DEG.) INC.1,3-21
-	22N48-50021		CYL-ASSY,TILT,RH	ﾃｨﾙﾄｼﾘﾝﾀﾞｱｯｾﾝ	1	[TIL014](3-6 DEG.) INC.1,3-21
-	22N48-50011		CYL-ASSY,TILT,RH	ﾃｨﾙﾄｼﾘﾝﾀﾞｱｯｾﾝ	1	[TIL016](6-6 DEG.) INC.1,3-19,21
-	22N48-50041		CYL-ASSY,TILT,RH	ﾃｨﾙﾄｼﾘﾝﾀﾞｱｯｾﾝ	1	[TIL017](6-10 DEG.) INC.1,3-19,21
A2	22N48-50201		CYL-ASSY,TILT,LH	ﾃｨﾙﾄｼﾘﾝﾀﾞｱｯｾﾝ	1	(6-12 DEG.) INC.2-19
-	22N48-50081		CYL-ASSY,TILT,LH	ﾃｨﾙﾄｼﾘﾝﾀﾞｱｯｾﾝ	1	[TIL013](3-3 DEG.) INC.2-21
-	22N48-50071		CYL-ASSY,TILT,LH	ﾃｨﾙﾄｼﾘﾝﾀﾞｱｯｾﾝ	1	[TIL014](3-6 DEG.) INC.2-21
-	22N48-50061		CYL-ASSY,TILT,LH	ﾃｨﾙﾄｼﾘﾝﾀﾞｱｯｾﾝ	1	[TIL016](6-6 DEG.) INC.2-19,21
-	22N48-50091		CYL-ASSY,TILT,LH	ﾃｨﾙﾄｼﾘﾝﾀﾞｱｯｾﾝ	1	[TIL017](6-10 DEG.) INC.2-19,21
901	22N48-52921	K1	KIT,REPAIR,CYL	ｼﾘﾝﾀﾞﾘﾍﾟｱｷｯﾄ	2	INC.6,9-12
902	22N48-52901	K2	KIT,CYL-BODY,RH	ｼﾘﾝﾀﾞﾎﾞﾃﾞｨｷｯﾄ	1	INC.1,18
903	22N48-52911	K3	KIT,CYL-BODY,LH	ｼﾘﾝﾀﾞﾎﾞﾃﾞｨｷｯﾄ	1	INC.2,18
904	22N48-52931	K4	KIT,ROD-HEAD	ﾛｯﾄﾞﾍｯﾄﾞｷｯﾄ	2	INC.13,14
905	22N48-52941	K5	KIT,CYL-HEAD	ｼﾘﾝﾀﾞﾍｯﾄﾞｷｯﾄ	2	INC.4,5
1	NO PART NO.	#*	BODY,CYL,RH	ﾎﾞﾃﾞｨ	1	
2	NO PART NO.	#*	BODY,CYL,LH	ﾎﾞﾃﾞｨ	1	
3	22N48-52801		ROD,PISTON	ﾛｯﾄﾞ	2	
4	NO PART NO.	#*	HEAD,CYL	ﾍｯﾄﾞ	2	
5	NO PART NO.	#*	BUSHING	ﾌﾞｯｼﾝｸﾞ	2	
6	NO PART NO.	#*	U-RING	Uﾘﾝｸﾞ	2	
7	22N48-52811		SPACER	ｽﾍﾟｰｻ	2	
8	22N48-52821		RING,SNAP	ﾘﾝｸﾞ	2	
9	NO PART NO.	#*	RING,WIPER	ﾘﾝｸﾞ	2	
10	NO PART NO.	#*	O-RING	Oﾘﾝｸﾞ	4	
11	NO PART NO.	#*	RING,BACK-UP	ﾘﾝｸﾞ	6	
12	NO PART NO.	#*	O-RING	Oﾘﾝｸﾞ	2	
13	NO PART NO.	#*	HEAD,ROD	ﾍｯﾄﾞ	2	
14	NO PART NO.	#*	BUSHING,PIN	ﾌﾞｯｼﾝｸﾞ	2	
15	22N48-52831		BOLT	ﾎﾞﾙﾄ	2	
16	22N48-52841		WASHER	ﾜｯｼｬ	2	
17	22N48-52851		NUT	ﾅｯﾄ	2	
18	NO PART NO.	#*	BUSHING,PIN	ﾌﾞｯｼﾝｸﾞ	2	
19	22N48-52861		NIPPLE,GREASE	ﾆｯﾌﾟﾙ	2	
20	22N48-52871		SPACER	ｽﾍﾟｰｻ	2	[TIL013][TIL014] (3-3,3-6 DEG.)
21	281E8-52201		SPACER	ｽﾍﾟｰｻ	2	[TIL013](3-3 DEG.)
-	216G8-52352		SPACER	ｽﾍﾟｰｻ	2	[TIL014][TIL016] (3-6,6-6 DEG.)
-	22N48-52421		SPACER	ｽﾍﾟｰｻ	2	[TIL017](6-10 DEG.)
22	22199-12401		CAP,NIPPLE	ｷｬｯﾌﾟ	2	
23	22N58-52401		SHIM	ｼﾑ	8	[TIL013][TIL014] (3-3,3-6 DEG.)
-	22N58-52401		SHIM	ｼﾑ	8	[TIL016][TIL017] (6-6,6-10 DEG.)
24	01066-10012		SCREW,SET	ｽｸﾘｭ	2	[TIL013][TIL014] (3-3,3-6 DEG.)

FIG.162A TILT CYLINDER

(F7Z28511) ﾃｨﾙﾄｼﾘﾝﾀﾞ

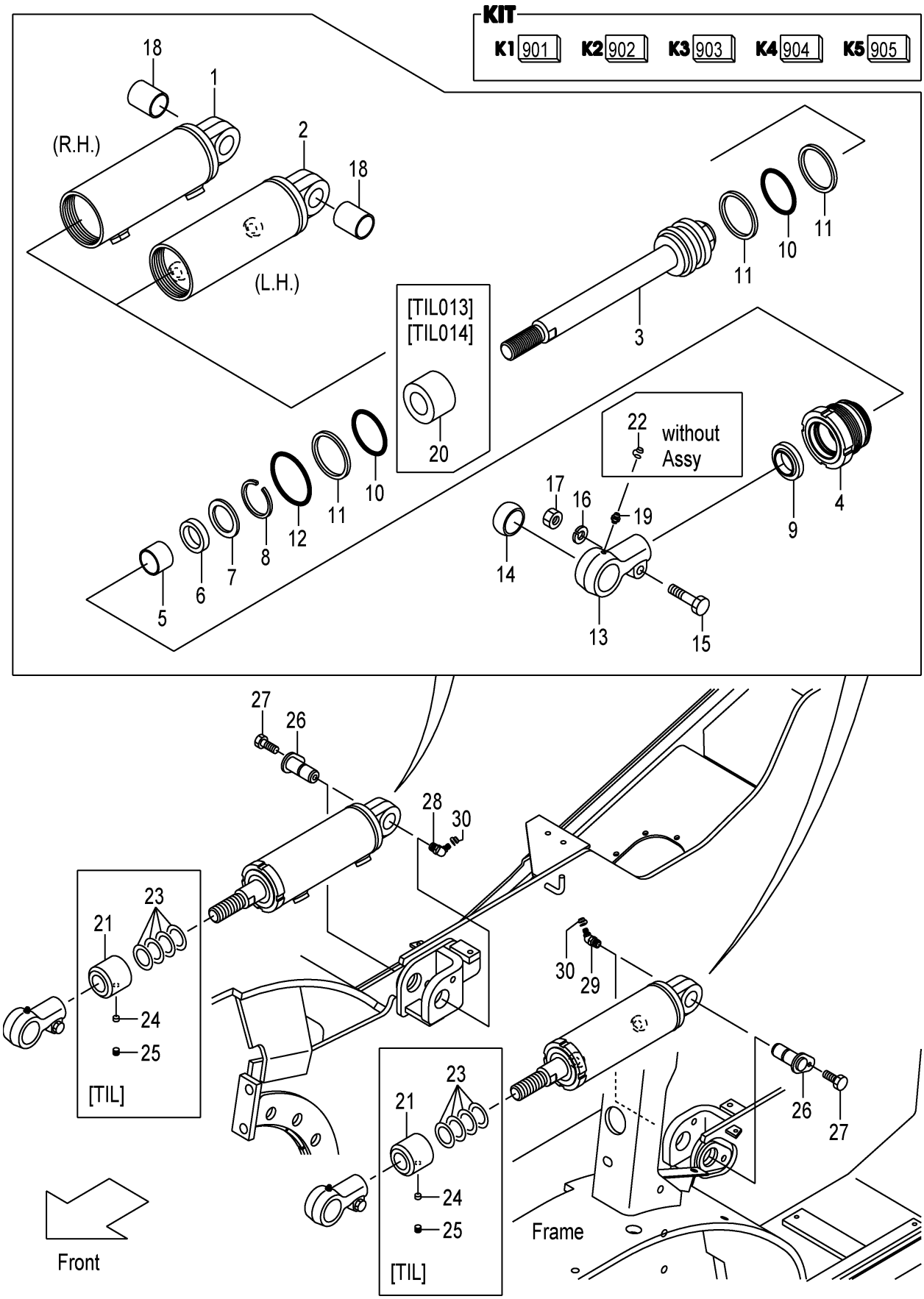

A:FD20C3Z FD20T3Z FD25C3Z FD25T3Z:119-

Item No	Part No.	Mark	Description		Req'd	Remarks : Serial No.
-	01066-10012		SCREW,SET	ｽｸﾘｭ	2	[TIL016][TIL017]
						(6-6,6-10 DEG.)
25	23658-52401		PLUG,NYLON	ﾌﾟﾗｸﾞ	2	[TIL013][TIL014]
						(3-3,3-6 DEG.)
-	23658-52401		PLUG,NYLON	ﾌﾟﾗｸﾞ	2	[TIL016][TIL017]
						(6-6,6-10 DEG.)
26	22N58-52301		PIN	ﾋﾟﾝ	2	
27	01186-10016		BOLT	ﾎﾞﾙﾄ	2	
28	04901-00160		FITTING	ﾌｨｯﾃｨﾝｸﾞ	1	
29	22N58-52201		FITTING	ﾌｨｯﾃｨﾝｸﾞ	1	
30	22199-12401		CAP,NIPPLE	ｷｬｯﾌﾟ	2	

FIG.163 TILT BOOT [TLB][FC]

(F7Z28520) ﾃｨﾙﾄﾌﾞｰﾂ

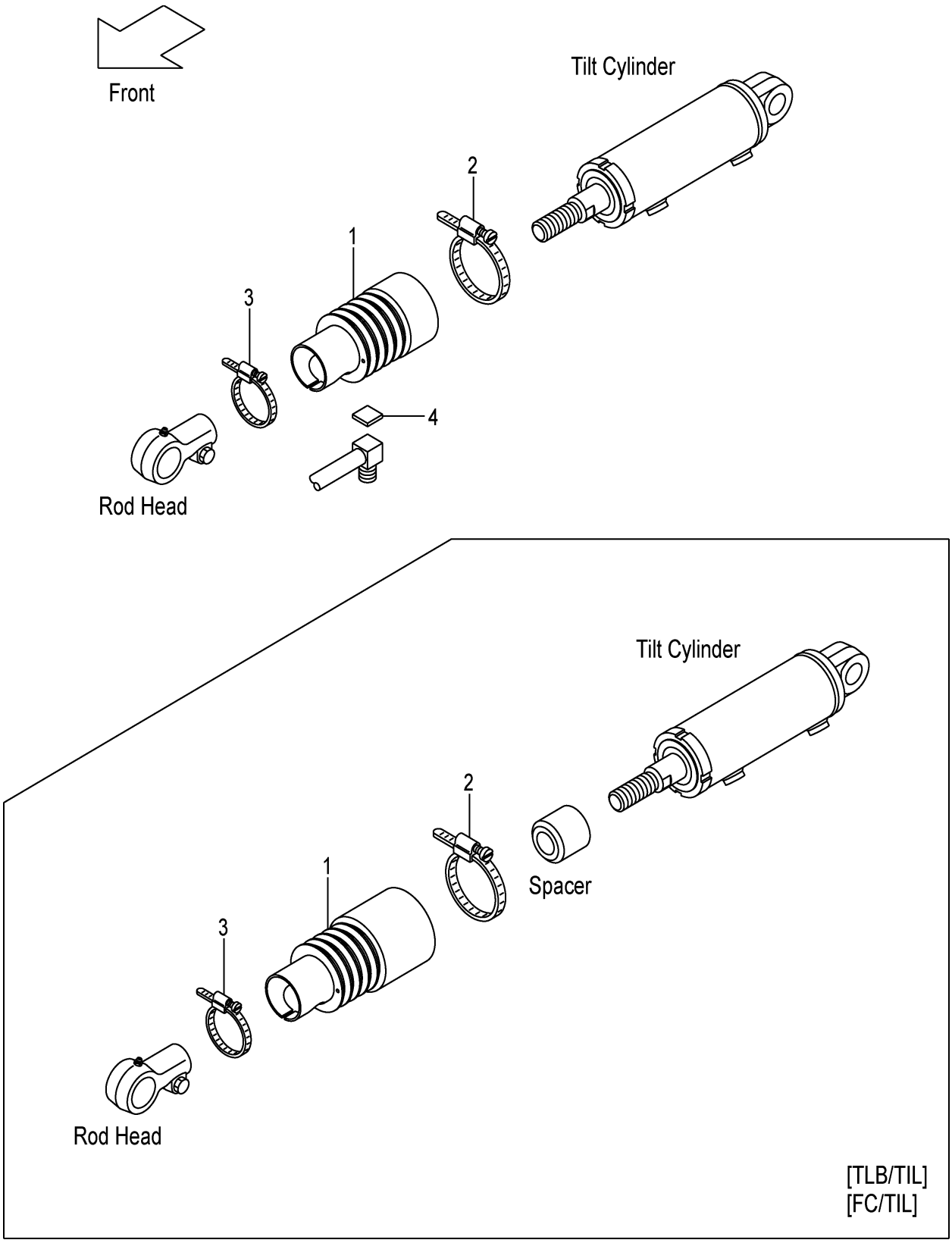

A:FD20C3Z FD20T3Z FD25C3Z FD25T3Z:1-118

Item No	Part No.	Mark	Description		Req'd	Remarks : Serial No.
A1	22N58-50301		BOOT-ASSY,TILT-CYL	ﾃｨﾙﾄｼﾘﾝﾀﾞﾌﾞｰﾂｱｯｾﾝ	2	[TLB][FC](6-12 DEG.) INC.1,2
-	22N58-50311		BOOT-ASSY,TILT-CYL	ﾃｨﾙﾄｼﾘﾝﾀﾞﾌﾞｰﾂｱｯｾﾝ	2	[TLB/TIL013&014] (3-3,3-6 DEG.) INC.1,2
-	22N58-50311		BOOT-ASSY,TILT-CYL	ﾃｨﾙﾄｼﾘﾝﾀﾞﾌﾞｰﾂｱｯｾﾝ	2	[TLB/TIL016&017] (6-6,6-10 DEG.) INC.1,2
-	22N58-50311		BOOT-ASSY,TILT-CYL	ﾃｨﾙﾄｼﾘﾝﾀﾞﾌﾞｰﾂｱｯｾﾝ	2	[FC/TIL013&014](3-3,3-6 DEG.) INC.1,2
-	22N58-50311		BOOT-ASSY,TILT-CYL	ﾃｨﾙﾄｼﾘﾝﾀﾞﾌﾞｰﾂｱｯｾﾝ	2	[FC/TIL016&017] (6-6,6-10 DEG.) INC.1,2
1	22N58-53001		BOOT,TILT-CYL	ﾌﾞｰﾂ	2	[TLB][FC](6-12 DEG.)
-	22N58-53101		BOOT,TILT-CYL	ﾌﾞｰﾂ	2	[TLB/TIL013&014] [FC/TIL013&014](3-3,3-6 DEG.)
-	22N58-53101		BOOT,TILT-CYL	ﾌﾞｰﾂ	2	[TLB/TIL016&017] [FC/TIL016&017] (6-6,6-10 DEG.)
2	224T8-53021		BAND,115	ﾊﾞﾝﾄﾞ	2	[TLB][FC]
3	22N58-53111		BAND,50	ﾊﾞﾝﾄﾞ	2	[TLB][FC]
4	61170-10111		RUBBER	ﾗﾊﾞｰ	1	[TLB][FC]

FIG.163A TILT BOOT [TLB][FC]

(F7Z28521) ﾃｨﾙﾄﾌﾞｰﾂ

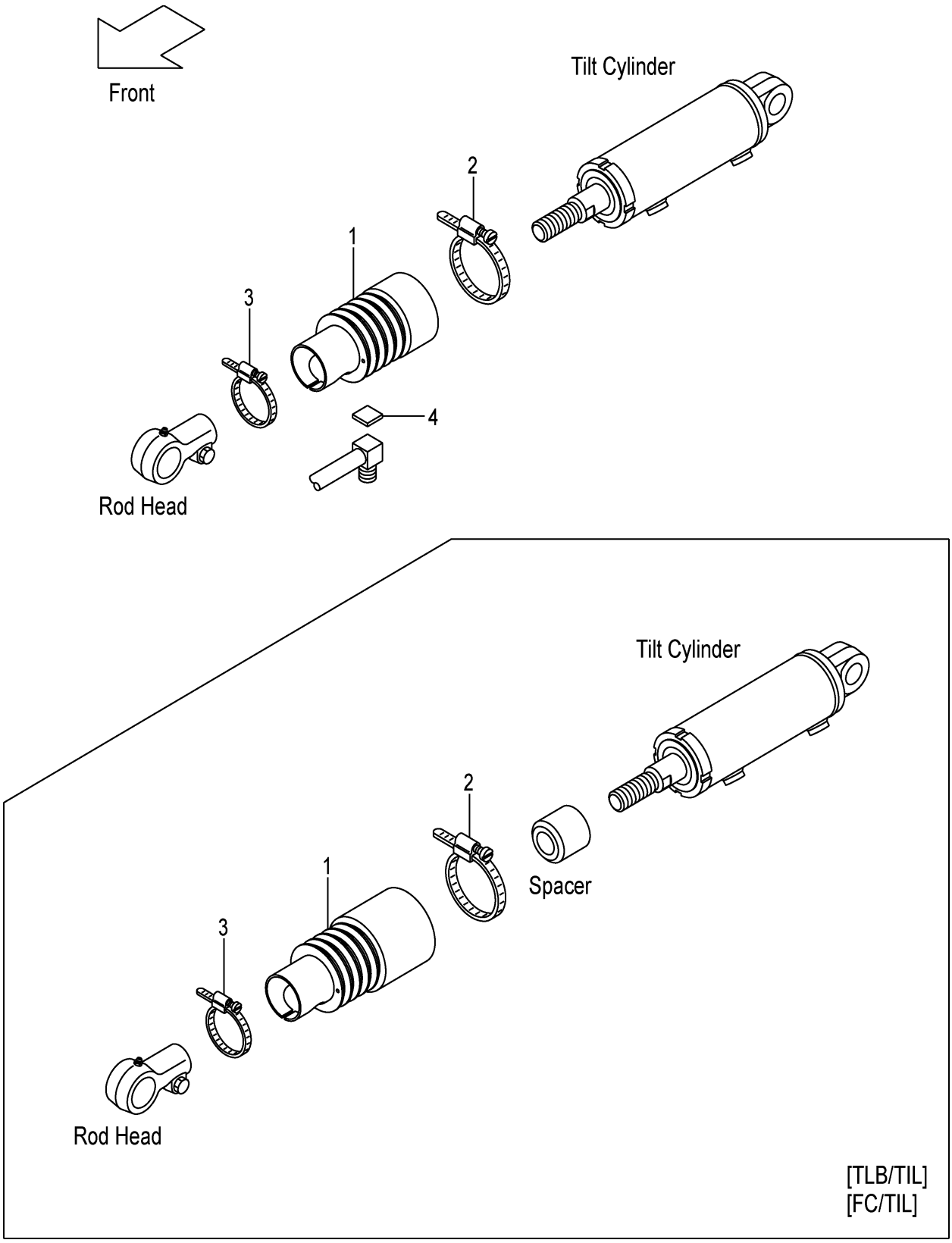

A:FD20C3Z FD20T3Z FD25C3Z FD25T3Z:119-

Item No	Part No.	Mark	Description		Req'd	Remarks : Serial No.
A1	22N48-50301		BOOT-ASSY,TILT-CYL	ﾃｨﾙﾄｼﾘﾝﾀﾞﾌﾞｰﾂｱｯｾﾝ	2	[TLB][FC](6-12 DEG.) INC.1,2
-	22N48-50311		BOOT-ASSY,TILT-CYL	ﾃｨﾙﾄｼﾘﾝﾀﾞﾌﾞｰﾂｱｯｾﾝ	2	[TLB/TIL013&014] (3-3,3-6 DEG.) INC.1,2
-	22N48-50311		BOOT-ASSY,TILT-CYL	ﾃｨﾙﾄｼﾘﾝﾀﾞﾌﾞｰﾂｱｯｾﾝ	2	[TLB/TIL016&017] (6-6,6-10 DEG.) INC.1,2
-	22N48-50311		BOOT-ASSY,TILT-CYL	ﾃｨﾙﾄｼﾘﾝﾀﾞﾌﾞｰﾂｱｯｾﾝ	2	[FC/TIL013&014](3-3,3-6 DEG.) INC.1,2
-	22N48-50311		BOOT-ASSY,TILT-CYL	ﾃｨﾙﾄｼﾘﾝﾀﾞﾌﾞｰﾂｱｯｾﾝ	2	[FC/TIL016&017] (6-6,6-10 DEG.) INC.1,2
1	22N48-53001		BOOT,TILT-CYL	ﾌﾞｰﾂ	2	[TLB][FC](6-12 DEG.)
-	22N48-53101		BOOT,TILT-CYL	ﾌﾞｰﾂ	2	[TLB/TIL013&014] [FC/TIL013&014](3-3,3-6 DEG.)
-	22N48-53101		BOOT,TILT-CYL	ﾌﾞｰﾂ	2	[TLB/TIL016&017] [FC/TIL016&017] (6-6,6-10 DEG.)
2	224T8-53011		BAND,95	ﾊﾞﾝﾄﾞ	2	[TLB][FC]
3	22N58-53111		BAND,50	ﾊﾞﾝﾄﾞ	2	[TLB][FC]
4	61170-10111		RUBBER	ﾗﾊﾞｰ	1	[TLB][FC]

FIG.164 DECAL (1/2)

(F7Z29110) ﾃﾞｶﾙ(1/2)

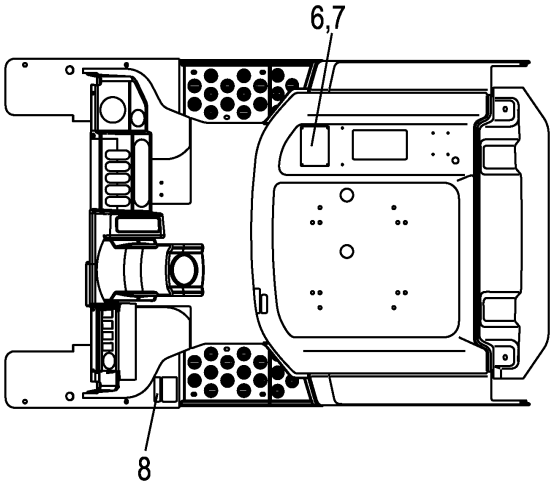

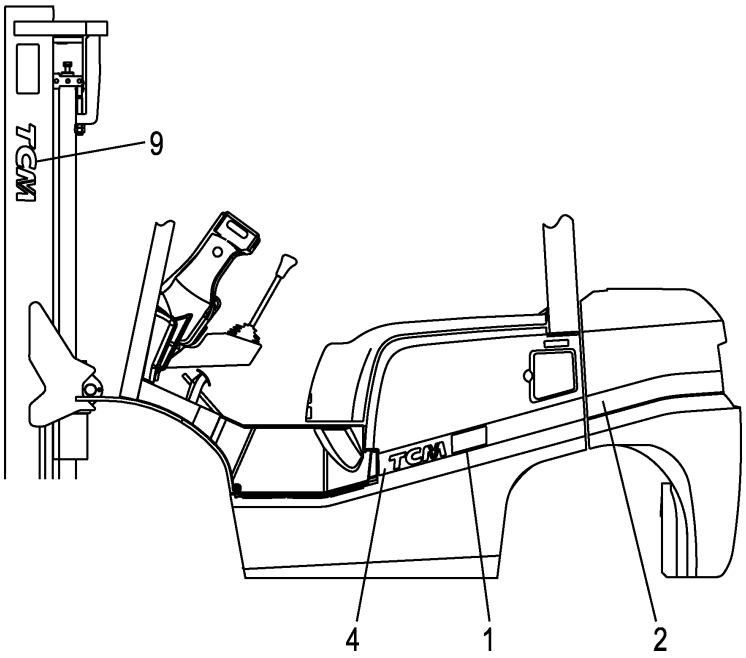

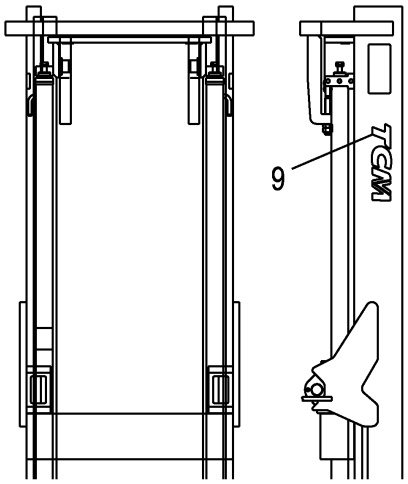

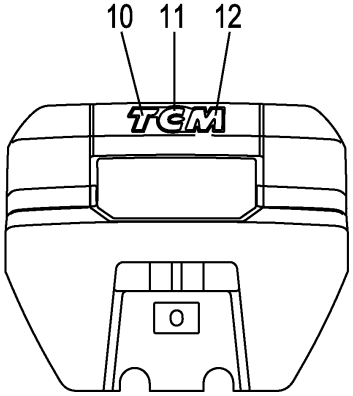

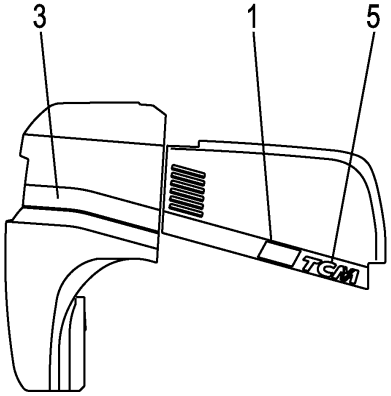

A:FD20C3Z FD20T3Z
B:FD25C3Z FD25T3Z

Item No	Part No.	Mark	Description		Req'd	Remarks : Serial No.
901	C-11452-2N5-D	K1	KIT,DECAL,JPN	ﾃﾞｶﾙｷｯﾄ	1	INC.8,9,FIG.165:3-16
-	C-11452-2N0-E	K1	KIT,DECAL,ENGLISH	ﾃﾞｶﾙｷｯﾄ	1	[EXB/ENGLISH]
						INC.8,9,FIG.166:3-11,14-22
-	C-11452-2N0-C	K1	KIT,DECAL,CHINESE	ﾃﾞｶﾙｷｯﾄ	1	[EXB/CHINESE]
						INC.8,9,FIG.166:3-19,21,22
1	22N19-12281		DECAL,MODEL-MARK,20	ﾃﾞｶﾙ	2	A
-	22N59-12281		DECAL,MODEL-MARK,25	ﾃﾞｶﾙ	2	B
2	22N19-12151		LINE,WEIGHT,LH	ﾗｲﾝ	1	A
-	22N19-12171		LINE,WEIGHT,LH	ﾗｲﾝ	1	A
						[ATF]
-	22N59-12151		LINE,WEIGHT,LH	ﾗｲﾝ	1	B
-	22N59-12171		LINE,WEIGHT,LH	ﾗｲﾝ	1	B
						[ATF]
3	22N19-12161		LINE,WEIGHT,RH	ﾗｲﾝ	1	A
-	22N19-12181		LINE,WEIGHT,RH	ﾗｲﾝ	1	A
						[ATF]
-	22N59-12161		LINE,WEIGHT,RH	ﾗｲﾝ	1	B
-	22N59-12181		LINE,WEIGHT,RH	ﾗｲﾝ	1	B
						[ATF]
4	22N59-12101		LINE,COVER,LH	ﾗｲﾝ	1	
5	22N59-12111		LINE,COVER,RH	ﾗｲﾝ	1	
6	22N19-12601		CHART,CAPACITY,2.0T	ﾁｬｰﾄ	1	A
						(VM200-500)
-	27419-12101		CHART,CAPACITY,2.0T	ﾁｬｰﾄ	1	A
						(VM550-600)
-	22N59-12601		CHART,CAPACITY,2.5T	ﾁｬｰﾄ	1	B
						(VM200-500)
-	27539-12021		CHART,CAPACITY,2.5T	ﾁｬｰﾄ	1	B
						(VM550-600)
-	63110-18921		CHART,CAPACITY	ﾁｬｰﾄ	1	[EXB/CHINESE]
7	02432-01008		RIVET	ﾘﾍﾞｯﾄ	4	
8	27049-12172	*	DECAL,AIR-PRESSURE	ﾃﾞｶﾙ	1	
9	273A9-12242	*	DECAL,TCM	ﾃﾞｶﾙ	2	
10	22N59-12041		DECAL,B/WEIGHT,T	ﾃﾞｶﾙ	1	
11	22N59-12051		DECAL,B/WEIGHT,C	ﾃﾞｶﾙ	1	
12	22N59-12061		DECAL,B/WEIGHT,M	ﾃﾞｶﾙ	1	

FIG.165 DECAL (2/2)

(F7Z29120) ﾃﾞｶﾙ(2/2)

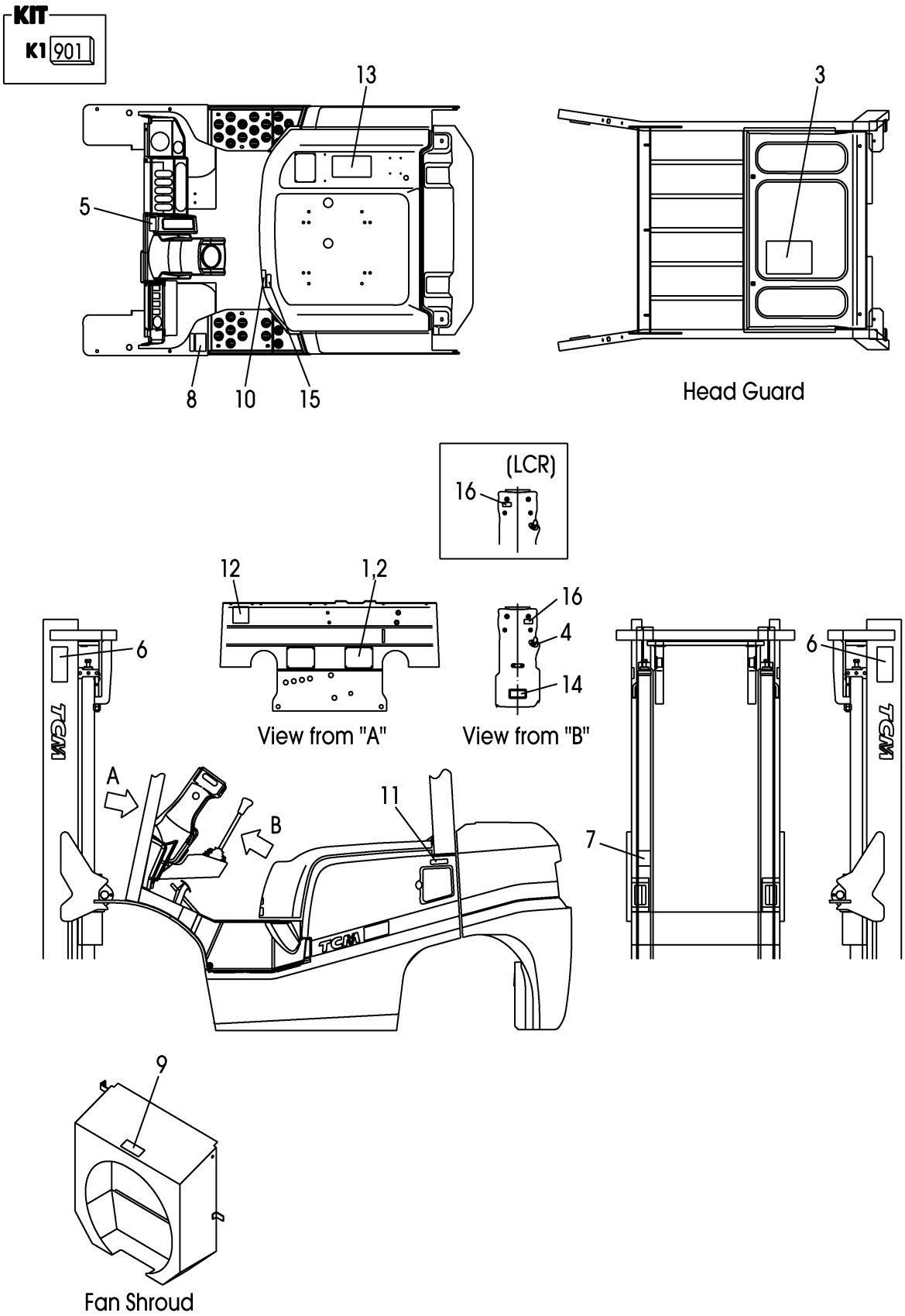

A:FD20C3Z FD20T3Z FD25C3Z FD25T3Z

Item No	Part No.	Mark	Description		Req'd	Remarks : Serial No.
901	C-11452-2N5-D	K1	KIT,DECAL,JPN	ﾃﾞｶﾙｷｯﾄ	1	INC.3-16,FIG.164:8,9
1	NO PART NO.	#	PLATE,NAME	ﾌﾟﾚｰﾄ	1	
2	216G9-12131		RIVET	ﾘﾍﾞｯﾄ	4	
3	22N59-12261	*	DECAL,LUBRICATION	ﾃﾞｶﾙ	1	
4	216G9-12071	*	DECAL,STARTER-SWITCH	ﾃﾞｶﾙ	1	
5	214A5-53012	*	DECAL,BRAKE-LEVER	ﾃﾞｶﾙ	1	
6	27419-12062	*	DECAL,MAST-CAUTION	ﾃﾞｶﾙ	2	
7	27419-12072	*	DECAL,CROSS-BEAM	ﾃﾞｶﾙ	1	
8	216G9-12062	*	DECAL,TIRE-CAUTION	ﾃﾞｶﾙ	1	
9	216G9-12052	*	DECAL,FAN-CAUTION	ﾃﾞｶﾙ	1	
10	238F9-12071	*	DECAL,FUEL-CAPACITY	ﾃﾞｶﾙ	1	
11	239A9-12051	*	DECAL,LIGHT-OIL	ﾃﾞｶﾙ	1	
12	271A9-12251	*	DECAL,CAUTION	ﾃﾞｶﾙ	1	
13	239A9-12301	*	DECAL,WARNING-PLATE	ﾃﾞｶﾙ	1	
14	26519-12281	*	DECAL,HOSE	ﾃﾞｶﾙ	1	
15	22N59-12351	*	DECAL,BONNET-CAUTION	ﾃﾞｶﾙ	1	
16	214A2-42141	*	DECAL,TURN-SIGNAL	ﾃﾞｶﾙ	1	735-

FIG.166 DECAL (2/2)[EXB]

(F7Z291B0) ﾃﾞｶﾙ(2/2)

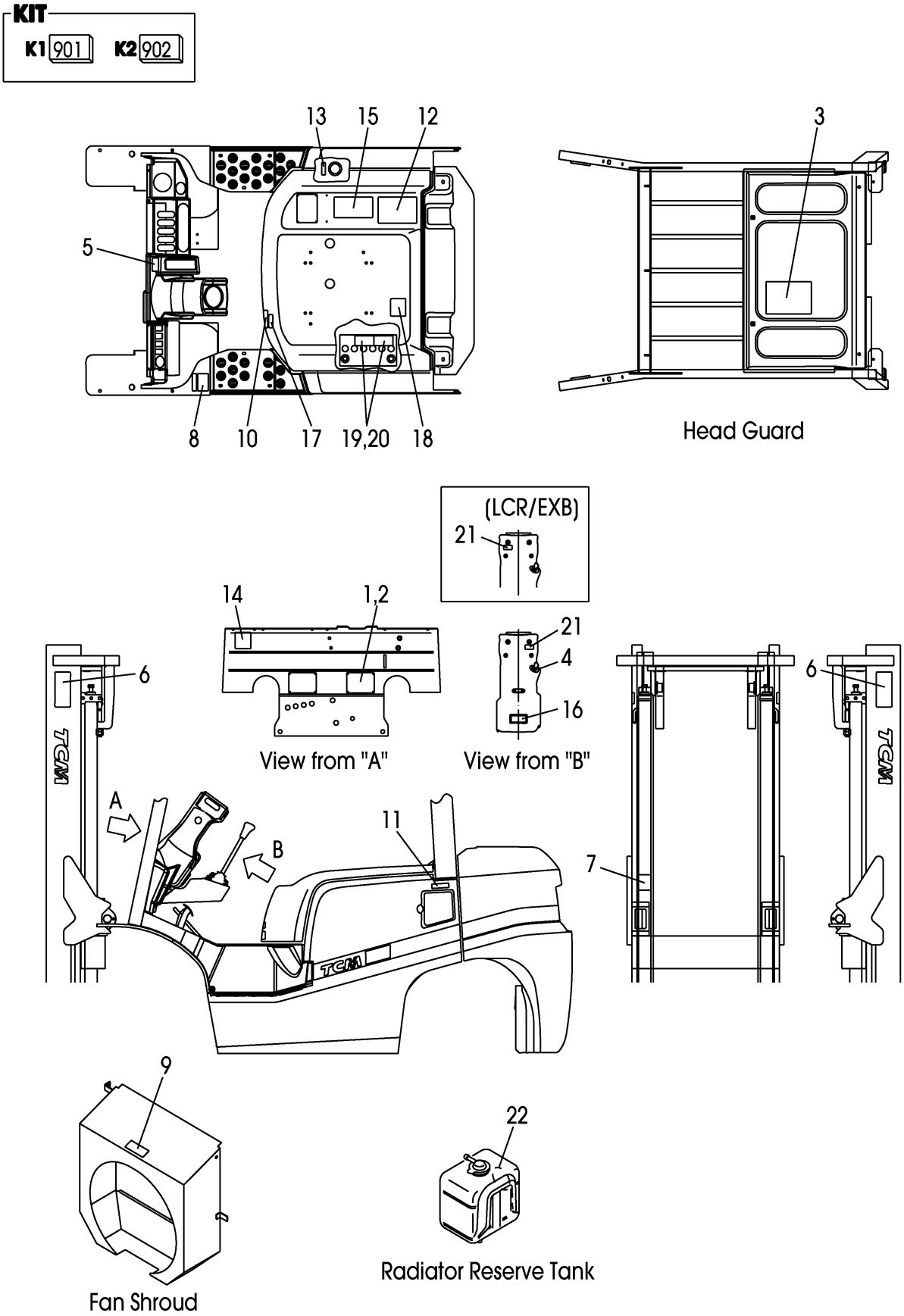

A:FD20C3Z FD20T3Z FD25C3Z FD25T3Z

Item No	Part No.	Mark	Description		Req'd	Remarks : Serial No.
901	C-11452-2N0-E	K1	KIT,DECAL,ENGLISH	ﾃﾞｶﾙｷｯﾄ	1	[EXB/ENGLISH]
						INC.3-11,14-22,FIG.164:8,9
902	C-11452-2N0-C	K2	KIT,DECAL,CHINESE	ﾃﾞｶﾙｷｯﾄ	1	[EXB/CHINESE]
						INC.3-19,21,22,FIG.164:8,9
1	NO PART NO.	#	PLATE,NAME	ﾌﾟﾚｰﾄ	1	[EXB/ENGLISH]
-	NO PART NO.	#	PLATE,NAME	ﾌﾟﾚｰﾄ	1	[EXB/CHINESE]
2	216G9-12131		RIVET	ﾘﾍﾞｯﾄ	4	[EXB]
3	52N52-72101	*	CHART,LUBRICATION	ﾁｬｰﾄ	1	[EXB/ENGLISH]
-	52N52-82401	*	CHART,LUBRICATION	ﾁｬｰﾄ	1	[EXB/CHINESE]
4	216G9-12071	*	DECAL,STARTER-SWITCH	ﾃﾞｶﾙ	1	[EXB]
5	514A3-82002	*	DECAL,BRAKE-LEVER	ﾃﾞｶﾙ	1	[EXB/ENGLISH]
-	514A2-82012	*	DECAL,BRAKE-LEVER	ﾃﾞｶﾙ	1	[EXB/CHINESE]
6	27419-12061	*	DECAL,MAST-CAUTION	ﾃﾞｶﾙ	2	[EXB]
7	27419-12071	*	DECAL,CROSS-BEAM	ﾃﾞｶﾙ	1	[EXB]
8	516G2-72711	*	DECAL,TIRE-CAUTION	ﾃﾞｶﾙ	1	[EXB/ENGLISH]
-	516G2-82061	*	DECAL,TIRE-CAUTION	ﾃﾞｶﾙ	1	[EXB/CHINESE]
9	516G2-72701	*	DECAL,FAN-CAUTION	ﾃﾞｶﾙ	1	[EXB/ENGLISH]
-	516G2-82051	*	DECAL,FAN-CAUTION	ﾃﾞｶﾙ	1	[EXB/CHINESE]
10	536G2-82181	*	DECAL,FUEL-CAPACITY	ﾃﾞｶﾙ	1	[EXB/ENGLISH]
-	536G2-82281	*	DECAL,FUEL-CAPACITY	ﾃﾞｶﾙ	1	[EXB/CHINESE]
11	509K3-82681	*	DECAL,LIGHT-OIL	ﾃﾞｶﾙ	1	[EXB/ENGLISH]
-	539A2-82051	*	DECAL,LIGHT-OIL	ﾃﾞｶﾙ	1	[EXB/CHINESE]
12	53652-82551	*	DECAL,CAUTION	ﾃﾞｶﾙ	1	[EXB/CHINESE]
13	53652-82541	*	DECAL,OIL	ﾃﾞｶﾙ	1	[EXB/CHINESE]
14	571A3-82361	*	DECAL,CAUTION	ﾃﾞｶﾙ	1	[EXB]
15	516G3-82801	*	DECAL,CAUTION	ﾃﾞｶﾙ	1	[EXB/ENGLISH]
-	52672-82073	*	DECAL,WARNING-PLATE	ﾃﾞｶﾙ	1	[EXB/CHINESE]
16	509K2-82251	*	DECAL,STEERING-HOSE	ﾃﾞｶﾙ	1	[EXB/ENGLISH]
-	509K3-83451	*	DECAL,STEERING-HOSE	ﾃﾞｶﾙ	1	[EXB/CHINESE]
17	52N52-72201	*	DECAL,BONNET-CAUTION	ﾃﾞｶﾙ	1	[EXB/ENGLISH]
-	52N52-82501	*	DECAL,BONNET-CAUTION	ﾃﾞｶﾙ	1	[EXB/CHINESE]
18	577H3-82151	*	DECAL,GAS-SPRING	ﾃﾞｶﾙ	1	[EXB/ENGLISH]
-	577H2-82021	*	DECAL,GAS-SPRING	ﾃﾞｶﾙ	1	[EXB/CHINESE]
19	534A3-82311	*	DECAL,BATTERY,A	ﾃﾞｶﾙ	1	[EXB/ENGLISH]
-	534A3-82531	*	DECAL,BATTERY	ﾃﾞｶﾙ	1	[EXB/CHINESE]
20	534A3-82421	*	DECAL,BATTERY,B	ﾃﾞｶﾙ	1	[EXB/ENGLISH]
21	214A2-42141	*	DECAL,TURN-SIGNAL	ﾃﾞｶﾙ	1	735-
						[EXB]
22	23659-12101	*	DECAL,LIFE-COOLANT	ﾃﾞｶﾙ	1	[EXB]

FIG.167 SERVICE TOOL

(F7Z29210) サービスツール

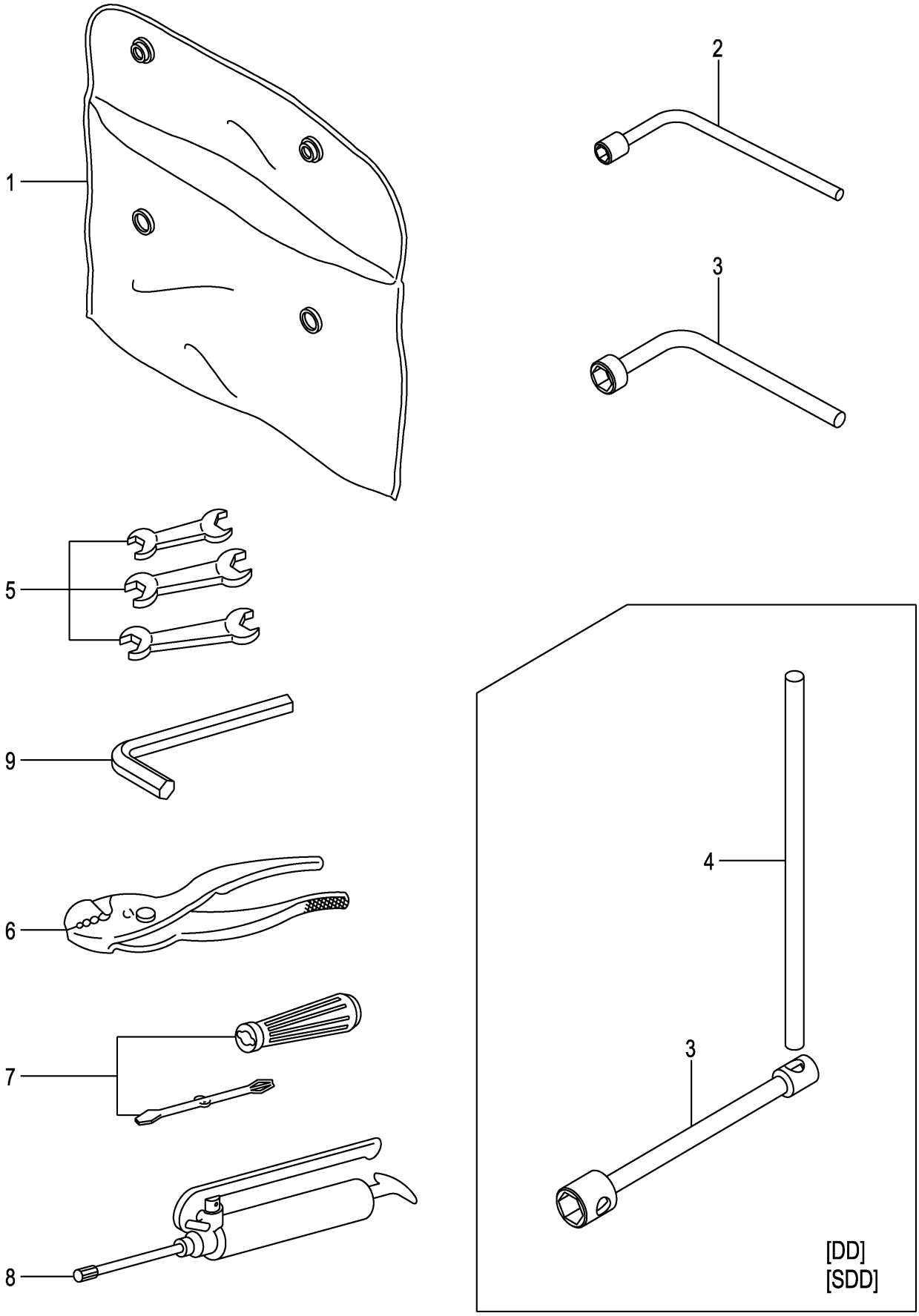

FIG.167

(F7Z29210)

A:FD20C3Z FD20T3Z FD25C3Z FD25T3Z

Item No	Part No.	Mark	Description		Req'd	Remarks : Serial No.
1	214A9-20101		SACK,SERVICE-TOOLS	ｻｯｸ	1	
2	22199-22251		WRENCH,HUB-NUT,21MM	ﾚﾝﾁ	1	(REAR)
3	25599-22001		WRENCH,HUB-NUT,32MM	ﾚﾝﾁ	1	(FRONT)
-	23819-20011		WRENCH,HUB-NUT,41MM	ﾚﾝﾁ	1	[DD][SDD](FRONT)
4	23819-20021		LEVER,WRENCH,HUB-NUT	ﾚﾊﾞｰ	1	[DD][SDD]
5	25599-22051		SET,SPANNER	ｽﾊﾟﾅｾｯﾄ	1	
6	23019-20011		PLIER,150MM	ﾌﾟﾗｲﾔ	1	
7	22199-22261		SET,DRIVER	ﾄﾞﾗｲﾊﾞｾｯﾄ	1	
8	22199-22001		GUN,GREASE	ｶﾞﾝ	1	
9	25599-22061		WRENCH,HEXAGON	ﾚﾝﾁ	1	

FIG.168 FRONT GLASS [AW061][AW071]

(F7Z29310) フロントガラス

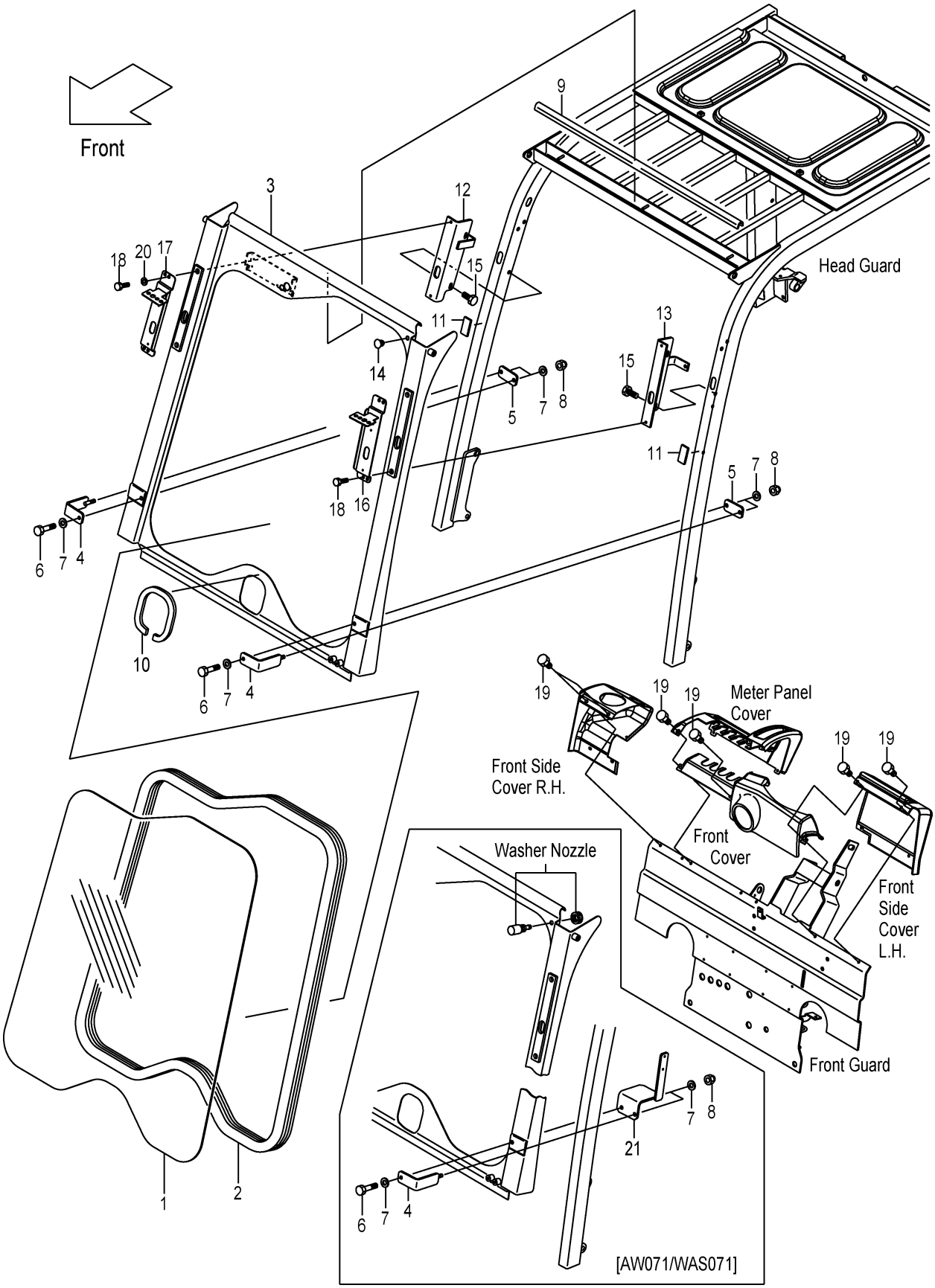

A:FD20C3Z FD20T3Z FD25C3Z FD25T3Z

Item No	Part No.	Mark	Description		Req'd	Remarks : Serial No.
A1	52N55-40051		SUPPORT-ASSY,GLASS	ｶﾞﾗｽｻﾎﾟｰﾄｱｯｾﾝ	1	[AW061][AW071] INC.1-3
1	52N55-42082		GLASS	ｶﾞﾗｽ	1	[AW061][AW071]
2	514A5-42141		H-RUBBER	Hﾗﾊﾞｰ	1	[AW061][AW071]
3	52N55-40101		SUPPORT,GLASS	ｻﾎﾟｰﾄ	1	[AW061][AW071]
4	52N55-42101		CLAMP	ｸﾗﾝﾌﾟ	2	[AW061][AW071]
5	52N55-42161		PLATE	ﾌﾟﾚｰﾄ	2	[AW061][AW071]
-	52N55-42161		PLATE	ﾌﾟﾚｰﾄ	1	[AW071/WAS071]
6	01101-10130		BOLT	ﾎﾞﾙﾄ	2	[AW061][AW071]
7	02000-20010		WASHER	ﾜｯｼｬ	6	[AW061][AW071]
8	53671-92821		NUT,DOMED-CAP	ﾅｯﾄ	4	[AW061][AW071]
9	529F5-42041		RUBBER	ﾗﾊﾞｰ	1	[AW061][AW071]
10	55535-42161		RUBBER	ﾗﾊﾞｰ	1	[AW061][AW071]
11	529F5-42061		RUBBER,SEAL	ﾗﾊﾞｰ	2	[AW061][AW071]
12	52N55-42111		BRACKET,RH	ﾌﾞﾗｹｯﾄ	1	[AW061][AW071]
13	52N55-42121		BRACKET,LH	ﾌﾞﾗｹｯﾄ	1	[AW061][AW071]
14	281E6-42571		PLUG,HOLE	ﾌﾟﾗｸﾞ	1	[AW061][AW071]
						(WITHOUT AW071/WAS071)
15	01185-08020		BOLT	ﾎﾞﾙﾄ	4	[AW061][AW071]
16	239A5-12521		BRACKET,HEAD-LAMP,LH	ﾌﾞﾗｹｯﾄ	1	[AW061][AW071]
17	239A5-12501		BRACKET,HEAD-LAMP,RH	ﾌﾞﾗｹｯﾄ	1	[AW061][AW071]
18	01183-08025		BOLT	ﾎﾞﾙﾄ	4	[AW061][AW071]
19	52N55-32291		BOLT	ﾎﾞﾙﾄ	6	[AW061][AW071]
20	02000-20010		WASHER	ﾜｯｼｬ	2	[AW061][AW071]
21	52N55-40401		BRACKET,TANK	ﾌﾞﾗｹｯﾄ	1	[AW071/WAS071]

FIG.168A FRONT GLASS [AW061][AW071]

(F7Z29311) フロントガラス

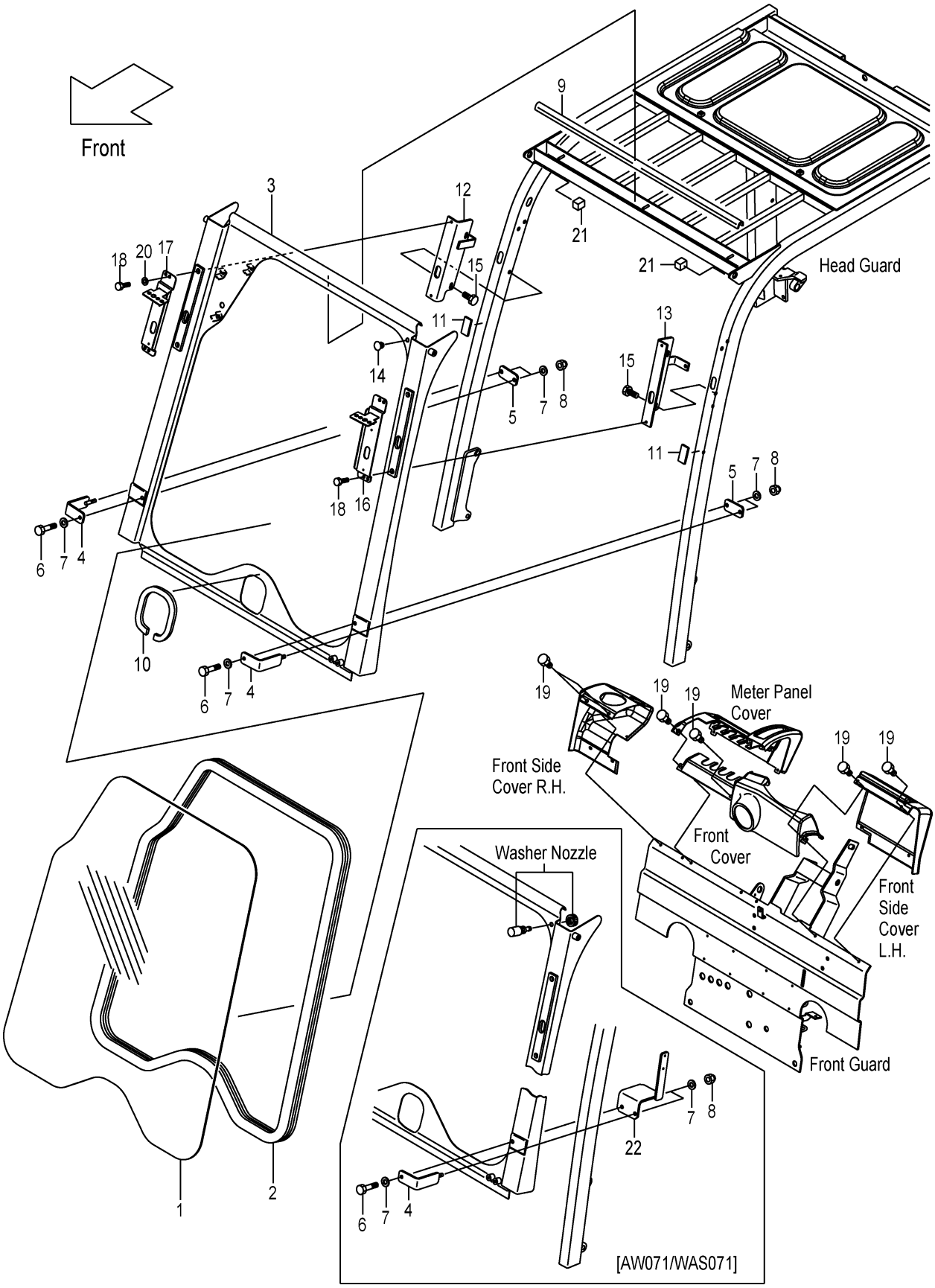

A:FD20C3Z FD20T3Z FD25C3Z FD25T3Z

Item No	Part No.	Mark	Description		Req'd	Remarks : Serial No.
A1	52N55-40052		SUPPORT-ASSY,GLASS	ｶﾞﾗｽｻﾎﾟｰﾄｱｯｾﾝ	1	[AW061][AW071] INC.1-3
1	52N55-42083		GLASS	ｶﾞﾗｽ	1	[AW061][AW071]
2	55785-42051		H-RUBBER	Hﾗﾊﾞｰ	1	[AW061][AW071]
3	52N55-40102		SUPPORT,GLASS	ｻﾎﾟｰﾄ	1	[AW061][AW071]
4	52N55-42101		CLAMP	ｸﾗﾝﾌﾟ	2	[AW061][AW071]
5	52N55-42161		PLATE	ﾌﾟﾚｰﾄ	2	[AW061][AW071]
-	52N55-42161		PLATE	ﾌﾟﾚｰﾄ	1	[AW071/WAS071]
6	01101-10130		BOLT	ﾎﾞﾙﾄ	2	[AW061][AW071]
7	02000-20010		WASHER	ﾜｯｼｬ	6	[AW061][AW071]
8	53671-92821		NUT,DOMED-CAP	ﾅｯﾄ	4	[AW061][AW071]
9	529F5-42041		RUBBER	ﾗﾊﾞｰ	1	[AW061][AW071]
10	55535-42161		RUBBER	ﾗﾊﾞｰ	1	[AW061][AW071]
11	529F5-42061		RUBBER,SEAL	ﾗﾊﾞｰ	2	[AW061][AW071]
12	52N55-42111		BRACKET,RH	ﾌﾞﾗｹｯﾄ	1	[AW061][AW071]
13	52N55-42121		BRACKET,LH	ﾌﾞﾗｹｯﾄ	1	[AW061][AW071]
14	281E6-42571		PLUG,HOLE	ﾌﾟﾗｸﾞ	1	[AW061][AW071]
						(WITHOUT AW071/WAS071)
15	01185-08020		BOLT	ﾎﾞﾙﾄ	4	[AW061][AW071]
16	239A5-12521		BRACKET,HEAD-LAMP,LH	ﾌﾞﾗｹｯﾄ	1	[AW061][AW071]
17	239A5-12501		BRACKET,HEAD-LAMP,RH	ﾌﾞﾗｹｯﾄ	1	[AW061][AW071]
18	01183-08025		BOLT	ﾎﾞﾙﾄ	4	[AW061][AW071]
19	52N55-32291		BOLT	ﾎﾞﾙﾄ	6	[AW061][AW071]
20	02000-20010		WASHER	ﾜｯｼｬ	2	[AW061][AW071]
21	52N55-42071		RUBBER	ﾗﾊﾞｰ	2	[AW061][AW071]
22	52N55-40401		BRACKET,TANK	ﾌﾞﾗｹｯﾄ	1	[AW071/WAS071]

FIG.169 FRONT GLASS WIPER [AW061][AW071]

(F7Z29320) フロントガラスワイパ

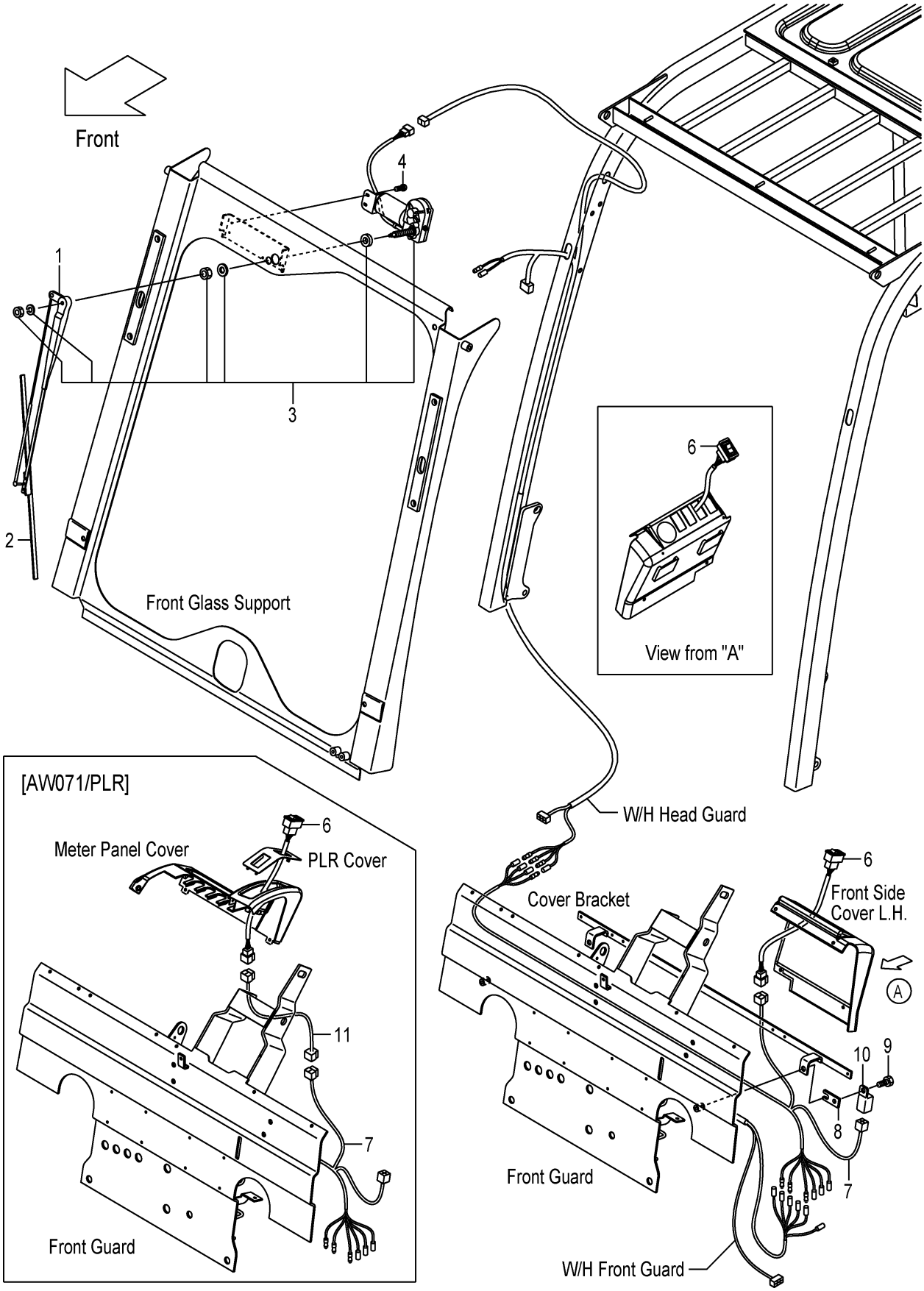

FIG.169

(F7Z29320)

A:FD20C3Z FD20T3Z FD25C3Z FD25T3Z

Item No	Part No.	Mark	Description		Req'd	Remarks : Serial No.
1	524W5-34011		ARM,WIPER	ｱｰﾑ	1	[AW061][AW071]
2	514A5-42051		BLADE,WIPER	ﾌﾞﾚｰﾄﾞ	1	[AW061][AW071]
3	534A5-32511		MOTOR,WIPER	ﾓｰﾀ	1	[AW061][AW071]
4	27042-63111		SCREW	ｽｸﾘｭ	2	[AW061][AW071]
5	01030-05035	+	SCREW	ｽｸﾘｭ	1	[AW061][AW071]
6	52N55-42201		SWITCH,WIPER	ｽｲｯﾁ	1	[AW061][AW071]
7	52N55-42211		WIRE-HARNESS,WIPER	ﾜｲﾔﾊｰﾈｽ	1	[AW061][AW071]
8	52N55-42221		PLATE	ﾌﾟﾚｰﾄ	1	[AW061][AW071]
9	01030-06012		SCREW	ｽｸﾘｭ	1	[AW061][AW071]
10	209K2-42351		RELAY,1A	ﾘﾚｰ	1	[AW061][AW071]
11	52N55-42351		WIRE-HARNESS	ﾜｲﾔﾊｰﾈｽ	1	[AW071/PLR]

FIG.169A FRONT GLASS WIPER [AW061][AW071]

(F7Z29321) ﾌﾛﾝﾄｶﾞﾗｽﾜｲﾊﾟ

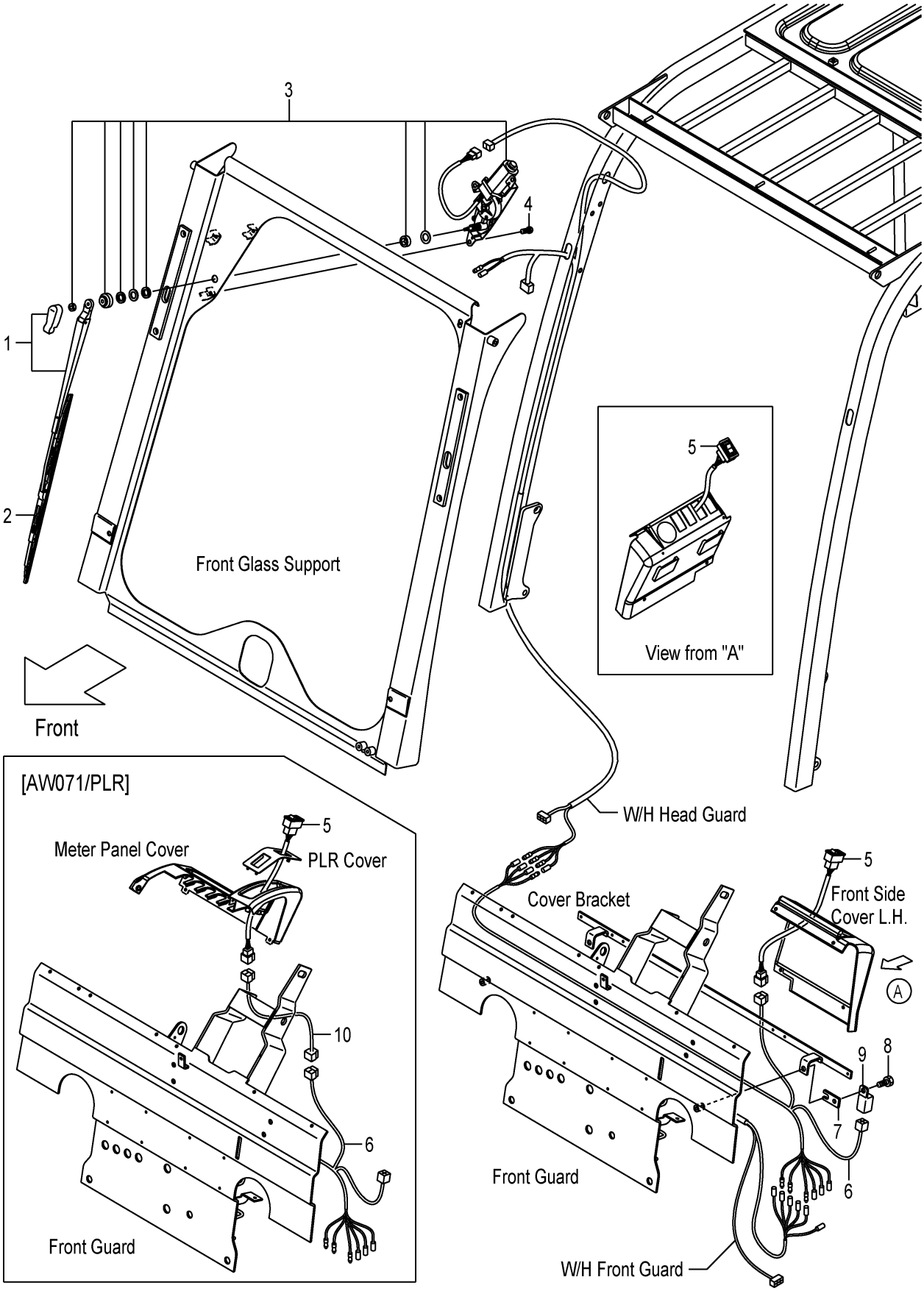

FIG.169A

(F7Z29321)

A:FD20C3Z FD20T3Z FD25C3Z FD25T3Z

Item No	Part No.	Mark	Description		Req'd	Remarks : Serial No.
1	52N55-42181		ARM,WIPER	ｱｰﾑ	1	[AW061][AW071]
2	52N55-42191		BLADE,WIPER	ﾌﾞﾚｰﾄﾞ	1	[AW061][AW071]
3	52N55-42171		MOTOR,WIPER	ﾓｰﾀ	1	[AW061][AW071]
4	214A6-42911		SCREW	ｽｸﾘｭ	3	[AW061][AW071]
5	52N55-42201		SWITCH,WIPER	ｽｲｯﾁ	1	[AW061][AW071]
6	52N55-42211		WIRE-HARNESS,WIPER	ﾜｲﾔﾊｰﾈｽ	1	[AW061][AW071]
7	52N55-42221		PLATE	ﾌﾟﾚｰﾄ	1	[AW061][AW071]
8	01030-06012		SCREW	ｽｸﾘｭ	1	[AW061][AW071]
9	209K2-42351		RELAY,1A	ﾘﾚｰ	1	[AW061][AW071]
10	52N55-42351		WIRE-HARNESS	ﾜｲﾔﾊｰﾈｽ	1	[AW071/PLR]

FIG.170 WINDOW WASHER [AW071/WAS071]

(F7Z29330) ｳｨﾝﾄﾞｳｫｯｼｬ

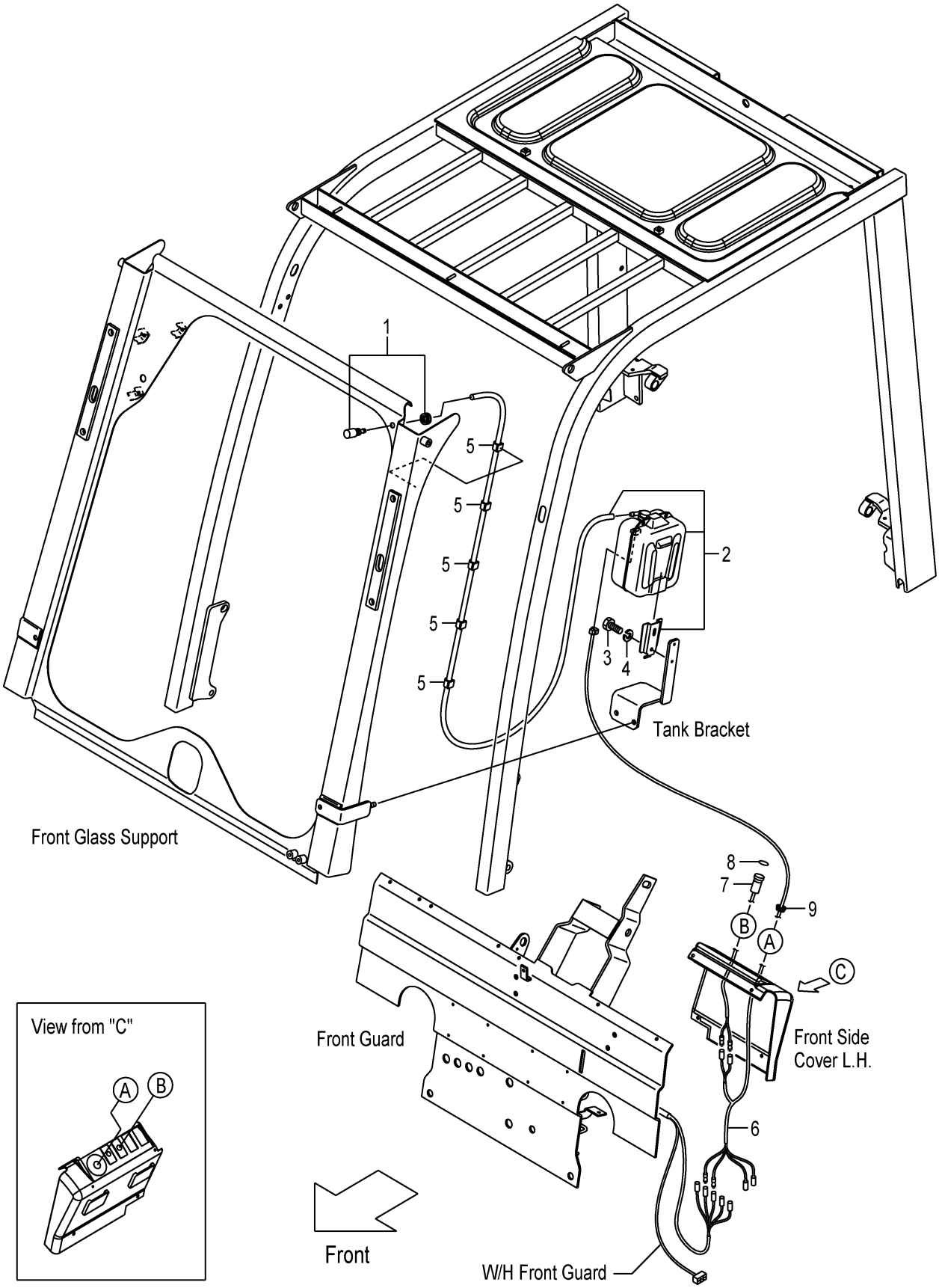

FIG.170

(F7Z29330)

A:FD20C3Z FD20T3Z FD25C3Z FD25T3Z

Item No	Part No.	Mark	Description		Req'd	Remarks : Serial No.
1	52N55-40301		NOZZLE,WASHER	ﾉｽﾞﾙ	1	[AW071/WAS071]
2	52N55-40311		TANK & PUMP,WASHER	ﾀﾝｸ&ﾎﾟﾝﾌﾟ	1	[AW071/WAS071]
3	01100-06010		BOLT	ﾎﾞﾙﾄ	2	[AW071/WAS071]
4	02010-00006		WASHER	ﾜｯｼｬ	2	[AW071/WAS071]
5	256C2-42271		CLIP	ｸﾘｯﾌﾟ	5	[AW071/WAS071]
6	52N55-42421		WIRE-HARNESS,WASHER	ﾜｲﾔﾊｰﾈｽ	1	[AW071/WAS071]
7	27042-64561		SWITCH	ｽｲｯﾁ	1	[AW071/WAS071]
8	52N55-42451		DECAL,WASHER	ﾃﾞｶﾙ	1	[AW071/WAS071]
9	221A2-42031		GROMMET	ｸﾞﾛﾒｯﾄ	1	[AW071/WAS071]

FIG.171 CANVAS CABIN [AW061]

(F7Z29340) キャンバスキャビン

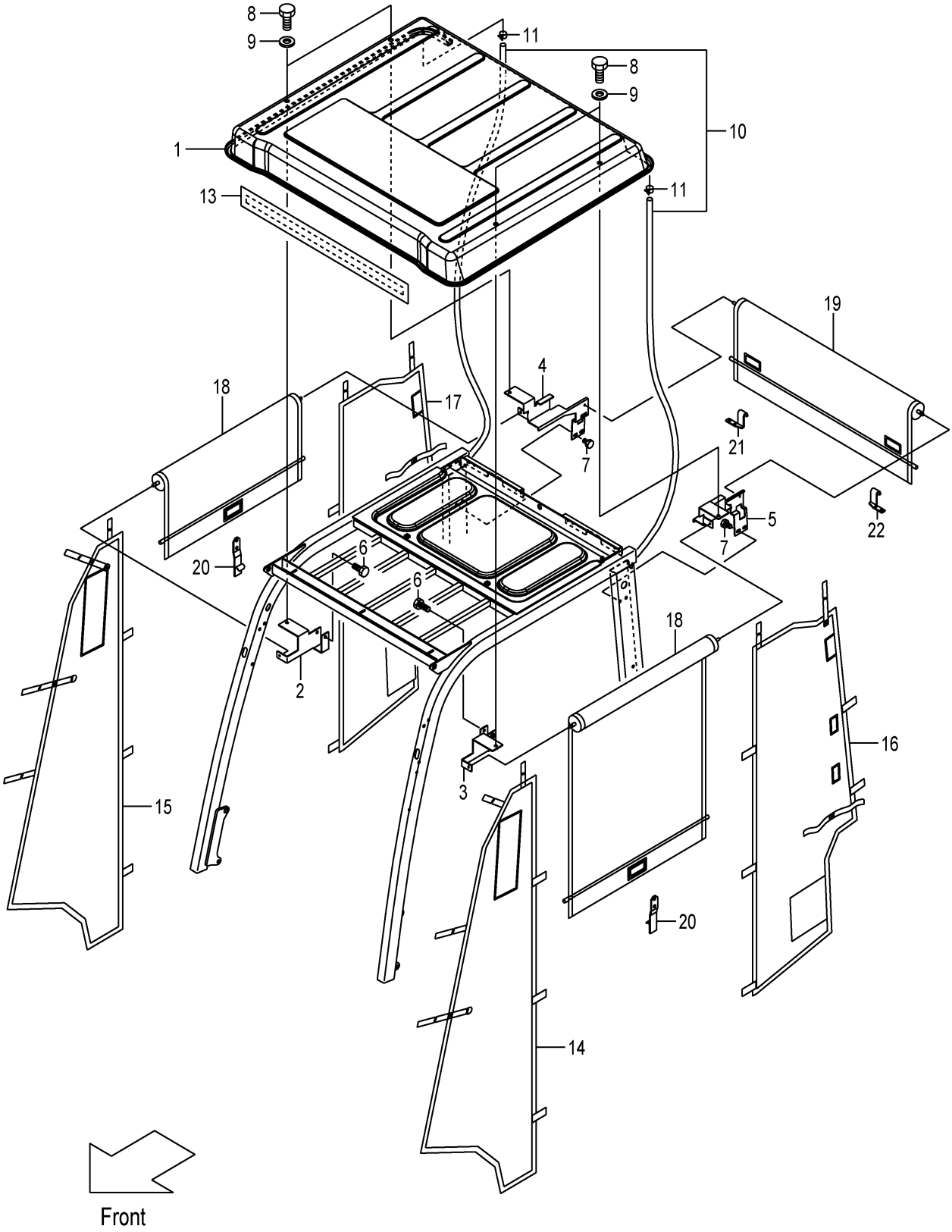

A:FD20C3Z FD20T3Z FD25C3Z FD25T3Z

Item No	Part No.	Mark	Description		Req'd	Remarks : Serial No.
A1	52N55-40201		CABIN-ASSY,FULL-OPEN		1	[AW061] INC.1-22
				ﾌﾙｵｰﾌﾟﾝｷｬﾋﾞﾝｱｯｾﾝ		
A2	52N55-40251		SUNROOF-ASSY	ｻﾝﾙｰﾌｱｯｾﾝ	1	[AW061] INC.1-12
1	52N55-42501		SUNROOF	ｻﾝﾙｰﾌ	1	[AW061]
2	52N55-42511		BRACKET,AR	ﾌﾞﾗｹｯﾄ	1	[AW061]
3	52N55-42521		BRACKET,AL	ﾌﾞﾗｹｯﾄ	1	[AW061]
4	52N55-42531		BRACKET,BR	ﾌﾞﾗｹｯﾄ	1	[AW061]
5	52N55-42541		BRACKET,BL	ﾌﾞﾗｹｯﾄ	1	[AW061]
6	01186-10065		BOLT	ﾎﾞﾙﾄ	2	[AW061]
7	01185-08020		BOLT	ﾎﾞﾙﾄ	4	[AW061]
8	01100-10016		BOLT	ﾎﾞﾙﾄ	4	[AW061]
9	55595-42251		WASHER,NYLON	ﾜｯｼｬ	4	[AW061]
10	52N55-42731		HOSE	ﾎｰｽ	1	[AW061]
11	52N55-42741		BAND	ﾊﾞﾝﾄﾞ	2	[AW061]
12	52N55-42751	+	SPONGE	ｽﾎﾟﾝｼﾞ	1	[AW061]
13	52N55-42551		COVER,TOP	ｶﾊﾞｰ	1	[AW061]
14	52N55-42561		COVER,FRONT,LH	ｶﾊﾞｰ	1	[AW061]
15	52N55-42571		COVER,FRONT,RH	ｶﾊﾞｰ	1	[AW061]
16	52N55-42581		COVER,REAR,LH	ｶﾊﾞｰ	1	[AW061]
17	52N55-42591		COVER,REAR,RH	ｶﾊﾞｰ	1	[AW061]
18	52N55-42701		ROLL,SIDE	ﾛｰﾙ	2	[AW061]
19	52N55-42711		ROLL,REAR	ﾛｰﾙ	1	[AW061]
20	52N55-42721		STOPPER,SIDE	ｽﾄｯﾊﾟ	2	[AW061]
21	534A5-43081		STOPPER,REAR-ROLL,RH	ｽﾄｯﾊﾟ	1	[AW061]
22	534A5-43091		STOPPER,REAR-ROLL,LH	ｽﾄｯﾊﾟ	1	[AW061]

FIG.172 FIRE EXTINGUISHER [FE]

(F7Z293K0) ﾌｧｲﾔｲｸｽﾃｨﾝｸﾞｲｯｼｬ

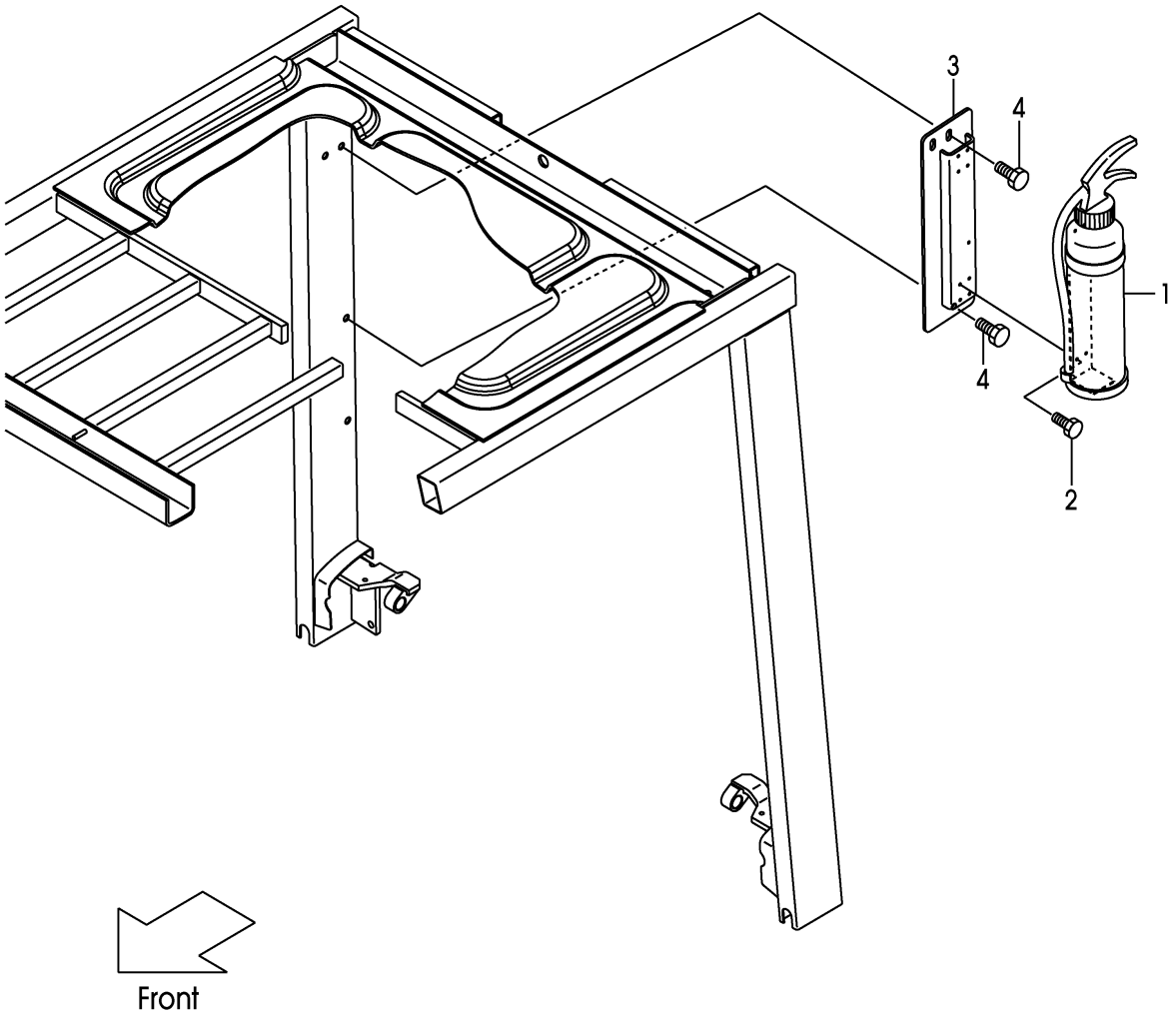

A:FD20C3Z FD20T3Z FD25C3Z FD25T3Z

Item No	Part No.	Mark	Description		Req'd	Remarks : Serial No.
1	22679-12102		EXTINGUISHER,FIRE	ｲｸｽﾃｨﾝｸﾞｲｯｼｬ	1	[FE]
2	01183-05012		BOLT	ﾎﾞﾙﾄ	4	[FE]
3	52N59-62001		BRACKET,FE	ﾌﾞﾗｹｯﾄ	1	[FE]
4	01185-08020		BOLT	ﾎﾞﾙﾄ	3	[FE]

FIG.173 FIRE EXTINGUISHER [FE M]

(F7Z293L0) ﾌｧｲﾔｲｸｽﾃｨﾝｸﾞｲｯｼｬ

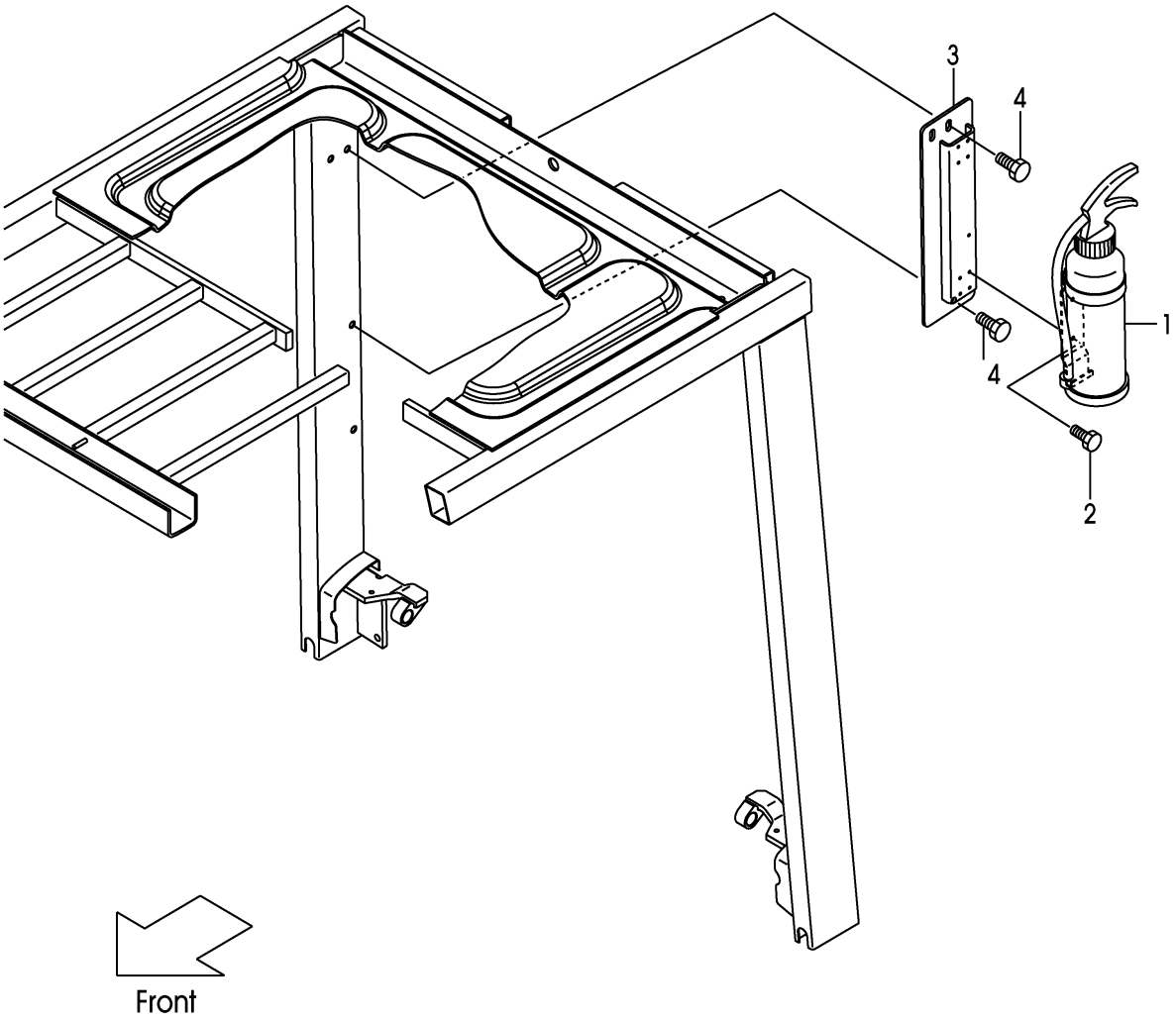

A:FD20C3Z FD20T3Z FD25C3Z FD25T3Z

Item No	Part No.	Mark	Description		Req'd	Remarks : Serial No.
1	271A9-12191		EXTINGUISHER,FIRE	ｲｸｽﾃｨﾝｸﾞｲｯｼｬ	1	[FE M]
2	01183-05012		BOLT	ﾎﾞﾙﾄ	2	[FE M]
3	52N59-62001		BRACKET,FE	ﾌﾞﾗｹｯﾄ	1	[FE M]
4	01185-08020		BOLT	ﾎﾞﾙﾄ	3	[FE M]

FIG.174 FORK [VM2N5]

(M7028110) フォーク

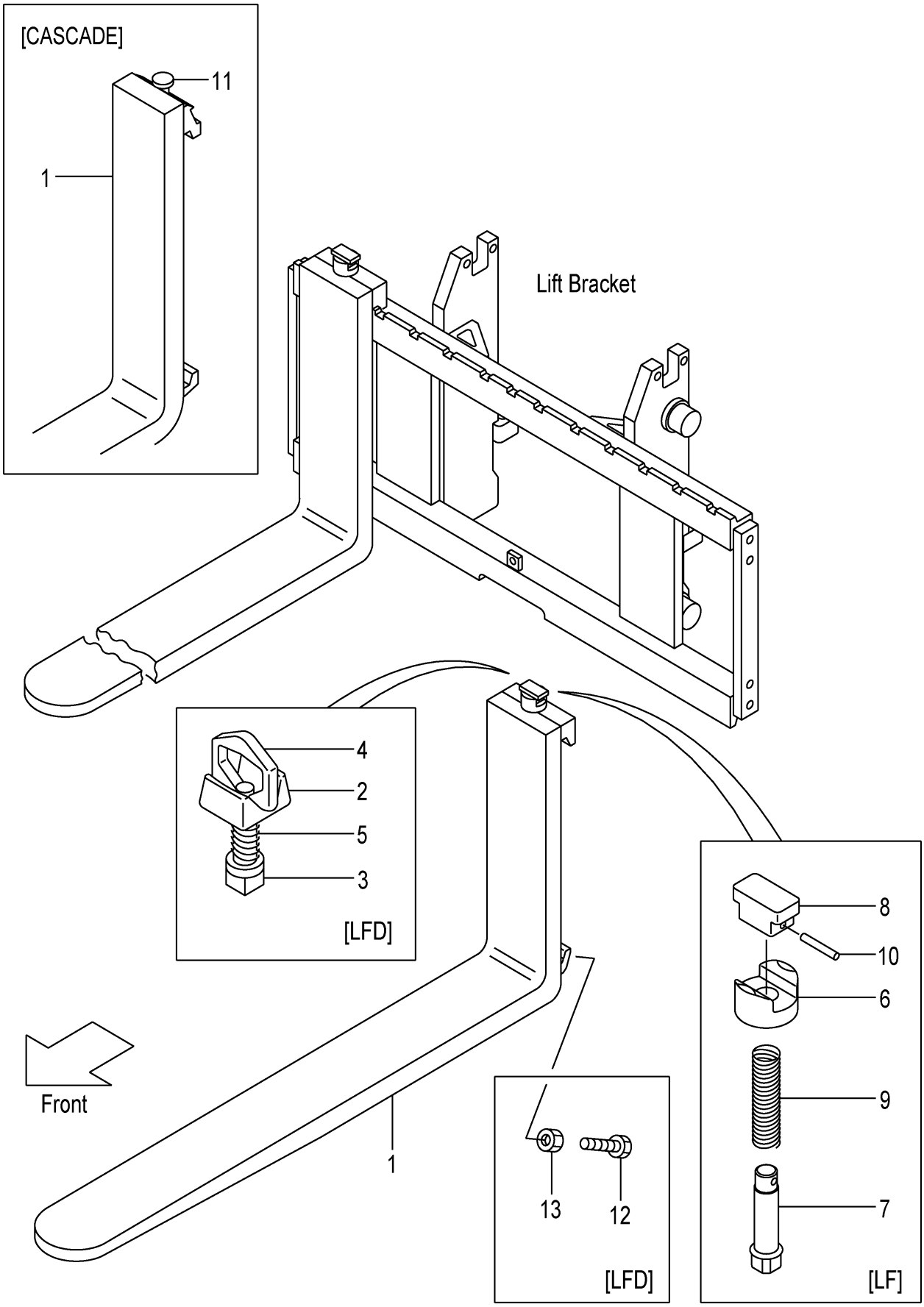

A:VM2N5(2T)
B:VM2N5(2.5T)

Item No	Part No.	Mark	Description		Req'd	Remarks : Serial No.
1	231A8-10101		FORK	ﾌｫｰｸ	2	A (L=920) INC.6-10
-	214A8-10512		FORK	ﾌｫｰｸ	2	B (L=1070) INC.6-10
-	231A8-10171		FORK	ﾌｫｰｸ	2	A [LF090] INC.6-10
-	231F8-10571		FORK	ﾌｫｰｸ	2	B [LF090] INC.6-10
-	231A8-10101		FORK	ﾌｫｰｸ	2	A [LF092] INC.6-10
-	231F8-10501		FORK	ﾌｫｰｸ	2	B [LF092] INC.6-10
-	214A8-10582		FORK	ﾌｫｰｸ	2	[LF100] INC.6-10
-	214A8-10512		FORK	ﾌｫｰｸ	2	[LF107][EX] INC.6-10
-	214A8-10592		FORK	ﾌｫｰｸ	2	[LF110] INC.6-10
-	214A8-10602		FORK	ﾌｫｰｸ	2	[LF120] INC.6-10
-	214A8-10522		FORK	ﾌｫｰｸ	2	[LF122] INC.6-10
-	214A8-10612		FORK	ﾌｫｰｸ	2	[LF130] INC.6-10
-	214A8-10532		FORK	ﾌｫｰｸ	2	[LF137] INC.6-10
-	214A8-10622		FORK	ﾌｫｰｸ	2	[LF140] INC.6-10
-	214A8-10632		FORK	ﾌｫｰｸ	2	[LF150] INC.6-10
-	214A8-10542		FORK	ﾌｫｰｸ	2	[LF152] INC.6-10
-	214A8-10642		FORK	ﾌｫｰｸ	2	[LF160] INC.6-10
-	214A8-10552		FORK	ﾌｫｰｸ	2	[LF167] INC.6-10
-	214A8-10653		FORK	ﾌｫｰｸ	2	[LF170] INC.6-10
-	214A8-10663		FORK	ﾌｫｰｸ	2	[LF180] INC.6-10
-	214A8-10563		FORK	ﾌｫｰｸ	2	[LF182] INC.6-10
-	214A8-10673		FORK	ﾌｫｰｸ	2	[LF190] INC.6-10
-	214A8-10683		FORK	ﾌｫｰｸ	2	[LF200] INC.6-10
-	234A8-10571		FORK	ﾌｫｰｸ	2	[LFD090] INC.2-5
-	234A8-10501		FORK	ﾌｫｰｸ	2	[LFD092] INC.2-5
-	234A8-10581		FORK	ﾌｫｰｸ	2	[LFD100] INC.2-5
-	234A8-10511		FORK	ﾌｫｰｸ	2	[LFD107] INC.2-5
-	234A8-10591		FORK	ﾌｫｰｸ	2	[LFD110] INC.2-5
-	234A8-10601		FORK	ﾌｫｰｸ	2	[LFD120] INC.2-5
-	234A8-10521		FORK	ﾌｫｰｸ	2	[LFD122] INC.2-5
-	234A8-10611		FORK	ﾌｫｰｸ	2	[LFD130] INC.2-5
-	234A8-10531		FORK	ﾌｫｰｸ	2	[LFD137] INC.2-5
-	234A8-10621		FORK	ﾌｫｰｸ	2	[LFD140] INC.2-5
-	234A8-10631		FORK	ﾌｫｰｸ	2	[LFD150] INC.2-5
-	234A8-10541		FORK	ﾌｫｰｸ	2	[LFD152] INC.2-5
-	234A8-10641		FORK	ﾌｫｰｸ	2	[LFD160] INC.2-5
-	234A8-10551		FORK	ﾌｫｰｸ	2	[LFD167] INC.2-5
-	234A8-10652		FORK	ﾌｫｰｸ	2	[LFD170] INC.2-5
-	234A8-10662		FORK	ﾌｫｰｸ	2	[LFD180] INC.2-5
-	234A8-10562		FORK	ﾌｫｰｸ	2	[LFD182] INC.2-5
-	234A8-10672		FORK	ﾌｫｰｸ	2	[LFD190] INC.2-5
-	234A8-10682		FORK	ﾌｫｰｸ	2	[LFD200] INC.2-5
-	22N58-10501		FORK	ﾌｫｰｸ	2	[LF092/CASCADE] INC.11
-	22N58-10511		FORK	ﾌｫｰｸ	2	[LF107/CASCADE] INC.11

FIG.174 FORK [VM2N5]

(M7028110) フォーク

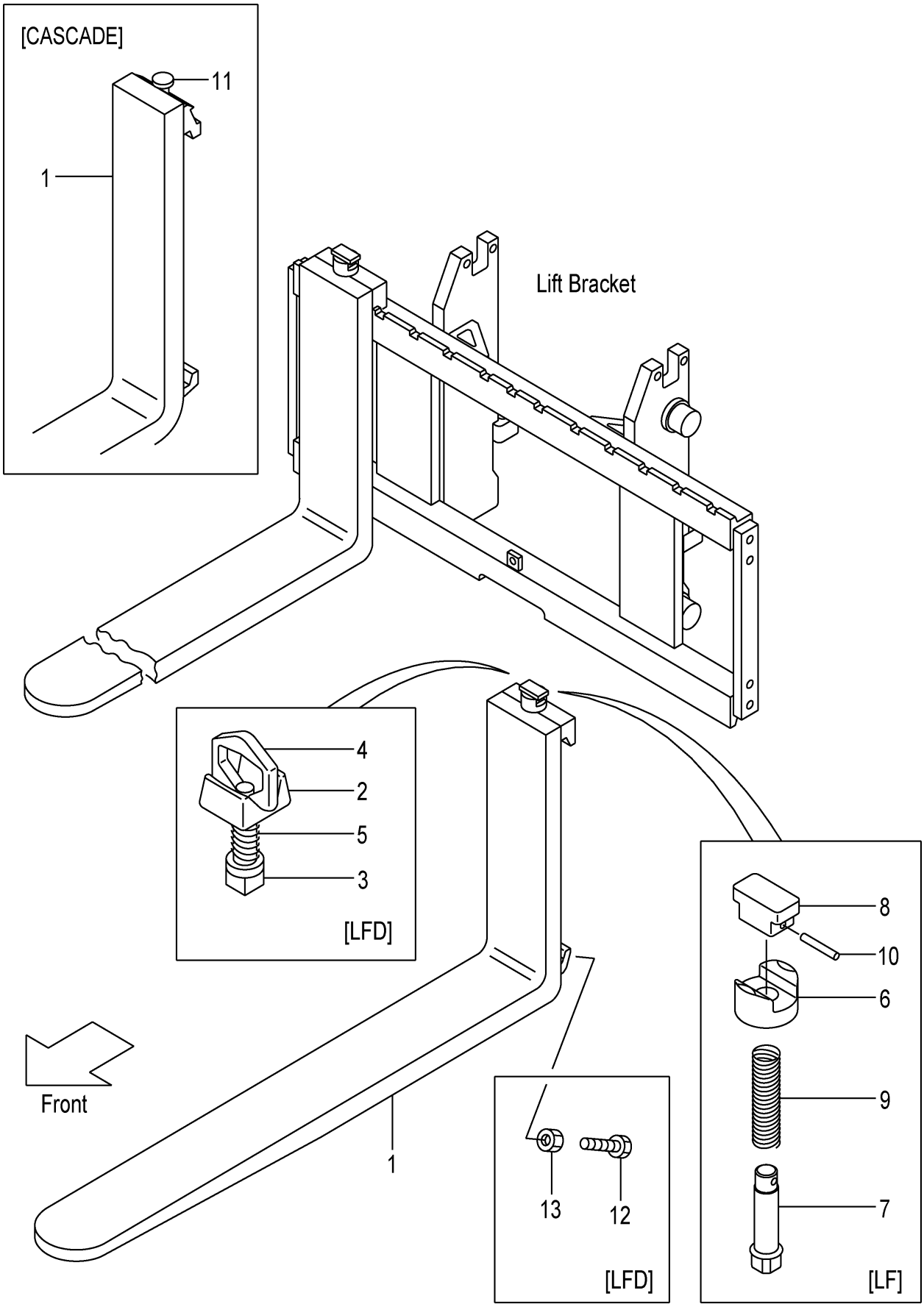

A:VM2N5(2T)
B:VM2N5(2.5T)

Item No	Part No.	Mark	Description		Req'd	Remarks : Serial No.
-	22N58-10521		FORK	ﾌｫｰｸ	2	[LF122/CASCADE] INC.11
A1	214A8-11001		STOPPER-ASSY,FORK	ﾌｫｰｸｽﾄｯﾊﾟｱｯｾﾝ	2	[LFD] INC.2-5
2	214A8-12001		HEAD	ﾍｯﾄﾞ	2	[LFD]
3	214A8-12011		STOPPER	ｽﾄｯﾊﾟ	2	[LFD]
4	214A8-12021		HANDLE	ﾊﾝﾄﾞﾙ	2	[LFD]
5	214A8-12031		SPRING	ｽﾌﾟﾘﾝｸﾞ	2	[LFD]
6	216G8-12921		HOLDER	ﾎﾙﾀﾞ	2	[LF]
7	231A8-12001		PIN	ﾋﾟﾝ	2	[LF]
8	231A8-12011		KNOB	ﾉﾌﾞ	2	[LF]
9	231A8-12021		SPRING	ｽﾌﾟﾘﾝｸﾞ	2	[LF]
10	231A8-12031		PIN,SPRING	ﾋﾟﾝ	2	[LF]
11	W-K2PK-M		KIT,PIN,STOPPER	ｽﾄｯﾊﾟﾋﾟﾝｷｯﾄ	2	[CASCADE]
12	216G8-12101		BOLT	ﾎﾞﾙﾄ	4	[LFD]
13	01402-00010		NUT	ﾅｯﾄ	4	[LFD]

FIG.175 LIFT BRACKET [VM2N5]

(M7028210) ﾘﾌﾄﾌﾞﾗｹｯﾄ

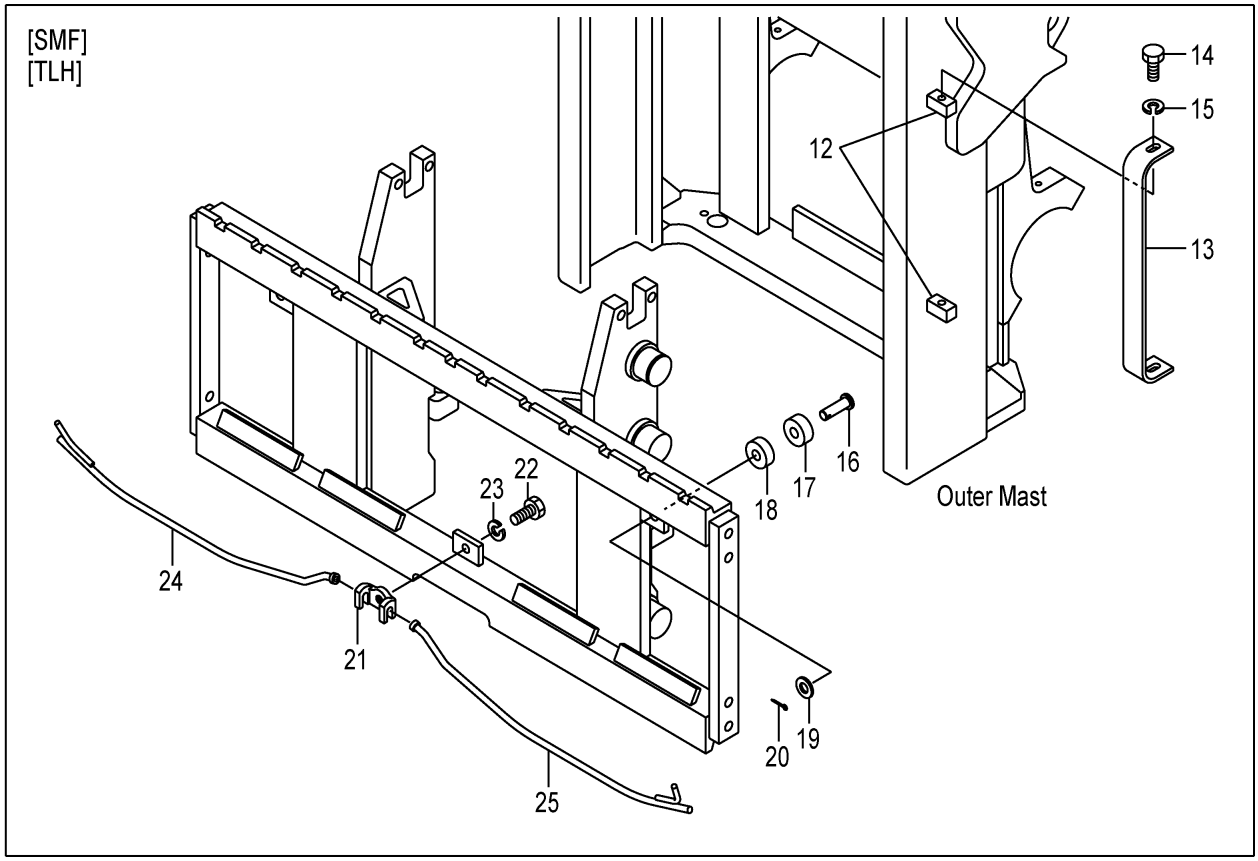

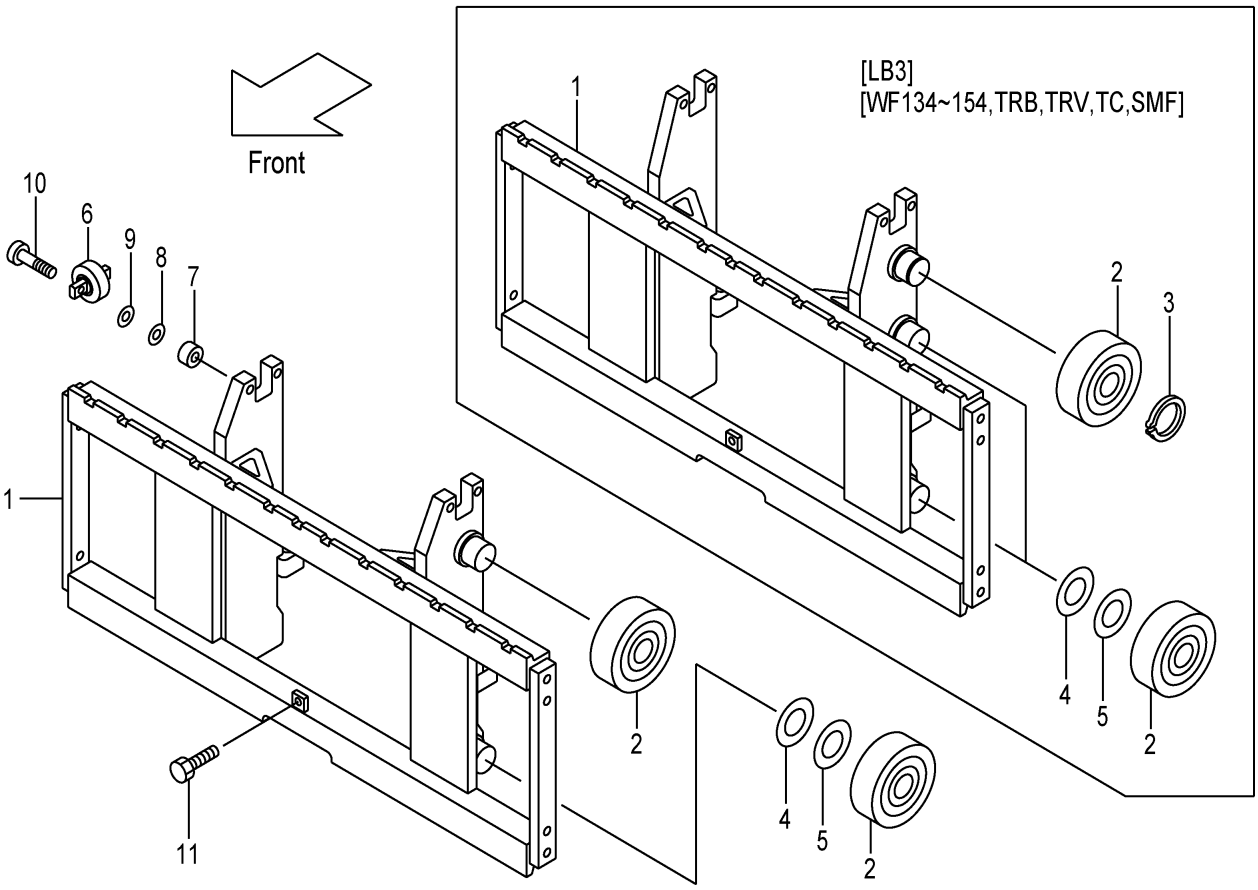

A:VM2N5(2T)
B:VM2N5(2.5T)

Item No	Part No.	Mark	Description		Req'd	Remarks : Serial No.
1	22N58-20201		BRACKET,LIFT	ﾌﾞﾗｹｯﾄ	1	
-	22N58-20701		BRACKET,LIFT	ﾌﾞﾗｹｯﾄ	1	[LB3]
-	52N51-61001		BRACKET,LIFT	ﾌﾞﾗｹｯﾄ	1	[WF134][WF135][WF138]
-	52N51-61011		BRACKET,LIFT,(L)	ﾌﾞﾗｹｯﾄ	1	[WF134][WF135][WF146][WF150] [WF154]
-	52N57-31001		BRACKET,LIFT	ﾌﾞﾗｹｯﾄ	1	[TRB][TRV][TC]
-	52N51-61101		BRACKET,LIFT	ﾌﾞﾗｹｯﾄ	1	[TRB/WF135]
-	52N51-61111		BRACKET,LIFT	ﾌﾞﾗｹｯﾄ	1	[TRB/WF146]
-	52N51-21001		BRACKET,LIFT	ﾌﾞﾗｹｯﾄ	1	[SMF]
2	277P8-22051		ROLLER,END,119.0	ﾛｰﾗ	4	
-	277P8-22051		ROLLER,END,119.0	ﾛｰﾗ	6	[LB3]
-	277P8-22051		ROLLER,END,119.0	ﾛｰﾗ	6	[WF134-154][TRB][TRV][TC] [SMF]
-	577P3-74001		ROLLER,END,119.0	ﾛｰﾗ	4	[FC][CSA][CS35][FCS35][FCS45] [FCS55]
-	277P8-22061		ROLLER,END,119.5	ﾛｰﾗ	(4)	
-	277P8-22061		ROLLER,END,119.5	ﾛｰﾗ	(6)	[LB3]
-	277P8-22061		ROLLER,END,119.5	ﾛｰﾗ	(6)	[WF134-154][TRB][TRV][TC] [SMF]
-	577P3-74011		ROLLER,END,119.5	ﾛｰﾗ	(4)	[FC][CSA][CS35][FCS35][FCS45] [FCS55]
3	02100-00045		RING,SNAP	ﾘﾝｸﾞ	2	[LB3]
-	02100-00045		RING,SNAP	ﾘﾝｸﾞ	2	[FC][CSA][CS35][FCS35][FCS45] [FCS55]
4	277P8-22071		SHIM,T-0.5	ｼﾑ	5	
5	277P8-22081		SHIM,T-1.0	ｼﾑ	5	
6	22N58-32701		ROLLER,SIDE,42.0	ﾛｰﾗ	2	
-	52N53-74001		ROLLER,SIDE,42.0	ﾛｰﾗ	2	[FC][CSA][CS35][FCS35][FCS45] [FCS55]
7	22N58-32711		SPACER	ｽﾍﾟｰｻ	4	
8	22018-30261		SHIM,T-0.2	ｼﾑ	5	
9	22018-30121		SHIM,T-1.0	ｼﾑ	5	
10	01103-10045		BOLT	ﾎﾞﾙﾄ	4	
11	01184-12025		BOLT	ﾎﾞﾙﾄ	1	
12	22N58-22951		BLOCK	ﾌﾞﾛｯｸ	4	[SMF]
13	22N58-31911		RAIL	ﾚｰﾙ	2	[SMF]
14	01100-10020		BOLT	ﾎﾞﾙﾄ	4	[SMF]
15	02010-00010		WASHER	ﾜｯｼｬ	4	[SMF]
16	02262-14045		PIN	ﾋﾟﾝ	2	[SMF]
17	22N58-22411		BUSHING	ﾌﾞｯｼﾝｸﾞ	2	[SMF]
18	27391-02101		RUBBER	ﾗﾊﾞｰ	2	[SMF]
19	02000-00014		WASHER	ﾜｯｼｬ	2	[SMF]
20	02200-04025		PIN,COTTER	ﾋﾟﾝ	2	[SMF]
21	22N58-21811		BRACKET	ﾌﾞﾗｹｯﾄ	1	[SMF]
22	01100-12020		BOLT	ﾎﾞﾙﾄ	1	[SMF]
23	02010-00012		WASHER	ﾜｯｼｬ	1	[SMF]
24	52N51-24101		BAR,RH	ﾊﾞｰ	1	[SMF]
25	52N51-24111		BAR,LH	ﾊﾞｰ	1	[SMF]
26	514A1-42161	+	WIRE,LEAD	ﾜｲﾔ	1	[TLH](VM366-600)

FIG.176 BACKREST [VM2N5]

(M7028220) ﾊﾞｯｸﾚｽﾄ

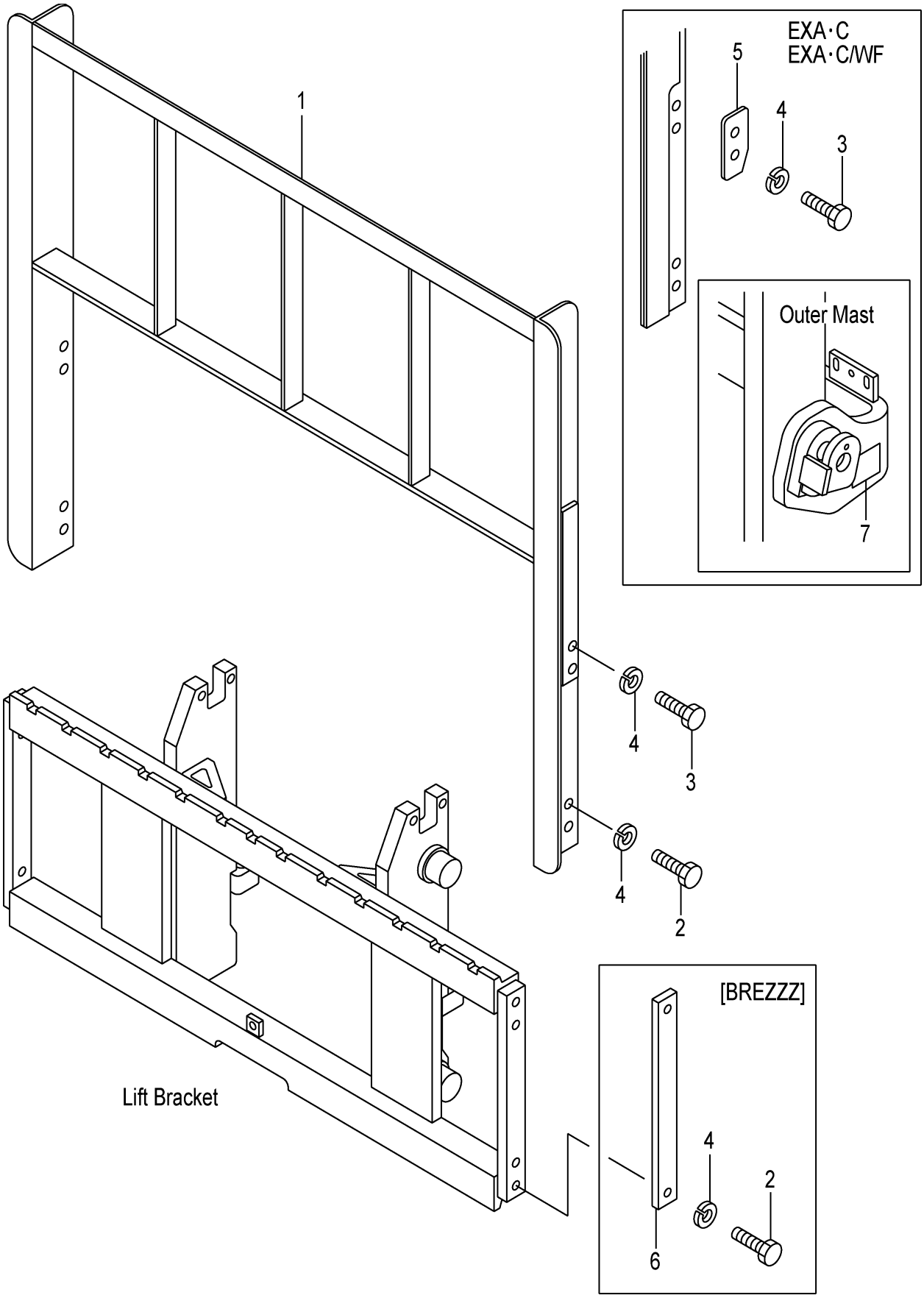

A:VM2N5(2T)
B:VM2N5(2.5T)

Item No	Part No.	Mark	Description		Req'd	Remarks : Serial No.
1	234A8-22202		BACKREST	ﾊﾞｯｸﾚｽﾄ	1	(WITHOUT BREZZZ)
-	534A2-74001		BACKREST	ﾊﾞｯｸﾚｽﾄ	1	[EXA][EXC]
-	239A8-20101		BACKREST	ﾊﾞｯｸﾚｽﾄ	1	[HBR110]
-	239A8-20111		BACKREST	ﾊﾞｯｸﾚｽﾄ	1	[HBR120]
-	239A8-20121		BACKREST	ﾊﾞｯｸﾚｽﾄ	1	[HBR130]
-	239A8-20131		BACKREST	ﾊﾞｯｸﾚｽﾄ	1	[HBR140]
-	239A8-20141		BACKREST	ﾊﾞｯｸﾚｽﾄ	1	[HBR150]
-	534A1-64402		BACKREST	ﾊﾞｯｸﾚｽﾄ	1	[WF135]
-	534A1-64412		BACKREST	ﾊﾞｯｸﾚｽﾄ	1	[WF146]
-	534A2-74101		BACKREST	ﾊﾞｯｸﾚｽﾄ	1	[WF135/EXA][WF135/EXC]
-	534A2-74201		BACKREST	ﾊﾞｯｸﾚｽﾄ	1	[WF146/EXA][WF146/EXC]
-	52N51-21101		BACKREST	ﾊﾞｯｸﾚｽﾄ	1	
2	01100-14025		BOLT	ﾎﾞﾙﾄ	4	
-	01100-14030		BOLT	ﾎﾞﾙﾄ	4	[HBR]
-	01100-14025		BOLT	ﾎﾞﾙﾄ	2	[SMF]
3	01100-14030		BOLT	ﾎﾞﾙﾄ	4	(WITHOUT BREZZZ)
-	01100-14035		BOLT	ﾎﾞﾙﾄ	4	[EXA][EXC][WF/EXA][WF/EXC]
4	02010-00014		WASHER	ﾜｯｼｬ	8	[SMF]
-	02010-00014		WASHER	ﾜｯｼｬ	4	[BREZZZ]
-	02010-00014		WASHER	ﾜｯｼｬ	6	[SMF]
5	534A2-74051		PLATE,STOPPER	ﾌﾟﾚｰﾄ	2	[EXA][EXC][WF/EXA][WF/EXC]
6	23659-42161		PLATE	ﾌﾟﾚｰﾄ	2	[BREZZZ]
7	534A2-74301		DECAL,CAUTION	ﾃﾞｶﾙ	1	[EXA][EXC][WF/EXA][WF/EXC]

FIG.177 MAST [VM2N5]

(M7028310) マスト

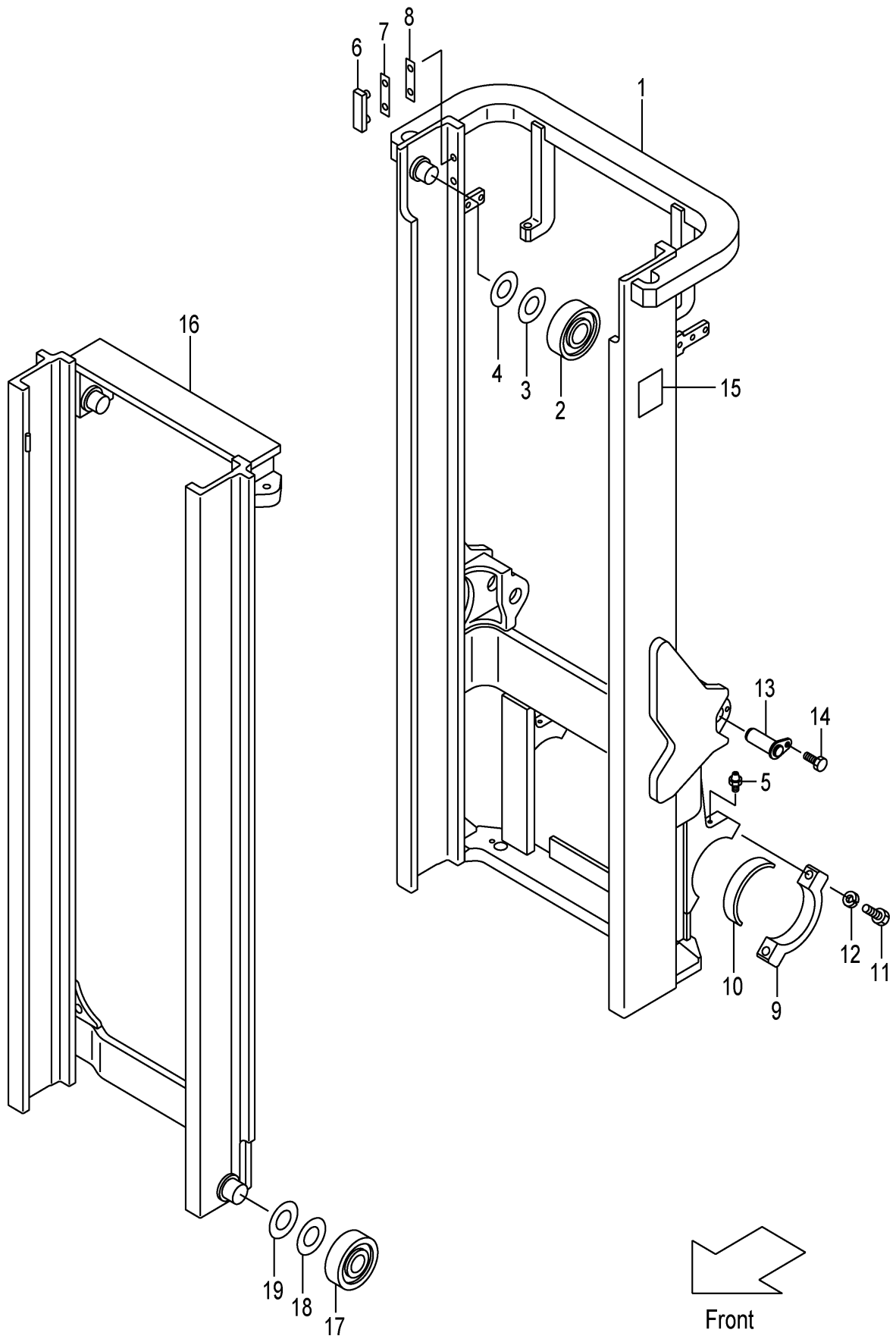

A:VM2N5(2T)
B:VM2N5(2.5T)

Item No	Part No.	Mark	Description		Req'd	Remarks : Serial No.
1	22N58-30211		MAST,OUTER VM200	ｱｳﾀﾏｽﾄ	1	
-	22N58-30221		MAST,OUTER VM225	ｱｳﾀﾏｽﾄ	1	
-	22N58-30231		MAST,OUTER VM250	ｱｳﾀﾏｽﾄ	1	
-	22N58-30241		MAST,OUTER VM270	ｱｳﾀﾏｽﾄ	1	
-	22N58-30251		MAST,OUTER VM275	ｱｳﾀﾏｽﾄ	1	
-	22N58-30201		MAST,OUTER VM300	ｱｳﾀﾏｽﾄ	1	
-	22N58-30261		MAST,OUTER VM325	ｱｳﾀﾏｽﾄ	1	
-	22N58-30271		MAST,OUTER VM330	ｱｳﾀﾏｽﾄ	1	
-	22N58-30281		MAST,OUTER VM350	ｱｳﾀﾏｽﾄ	1	
-	22N58-30291		MAST,OUTER VM366	ｱｳﾀﾏｽﾄ	1	
-	22N58-30301		MAST,OUTER VM370	ｱｳﾀﾏｽﾄ	1	
-	22N58-30311		MAST,OUTER VM375	ｱｳﾀﾏｽﾄ	1	
-	22N58-30321		MAST,OUTER VM400	ｱｳﾀﾏｽﾄ	1	
-	22N58-30331		MAST,OUTER VM425	ｱｳﾀﾏｽﾄ	1	
-	22N58-30341		MAST,OUTER VM450	ｱｳﾀﾏｽﾄ	1	
-	22N58-30351		MAST,OUTER VM475	ｱｳﾀﾏｽﾄ	1	
-	22N58-30361		MAST,OUTER VM500	ｱｳﾀﾏｽﾄ	1	
-	22N58-30371		MAST,OUTER VM550	ｱｳﾀﾏｽﾄ	1	
-	22N58-30381		MAST,OUTER VM600	ｱｳﾀﾏｽﾄ	1	
-	52N53-91011		MAST,OUTER VM200	ｱｳﾀﾏｽﾄ	1	[RW][HC][EXR]
-	52N53-91021		MAST,OUTER VM225	ｱｳﾀﾏｽﾄ	1	[RW][HC][EXR]
-	52N53-91031		MAST,OUTER VM250	ｱｳﾀﾏｽﾄ	1	[RW][HC][EXR]
-	52N53-91041		MAST,OUTER VM270	ｱｳﾀﾏｽﾄ	1	[RW][HC][EXR]
-	52N53-91051		MAST,OUTER VM275	ｱｳﾀﾏｽﾄ	1	[RW][HC][EXR]
-	52N53-91001		MAST,OUTER VM300	ｱｳﾀﾏｽﾄ	1	[RW][HC][EXR]
-	52N53-91061		MAST,OUTER VM325	ｱｳﾀﾏｽﾄ	1	[RW][HC][EXR]
-	52N53-91071		MAST,OUTER VM330	ｱｳﾀﾏｽﾄ	1	[RW][HC][EXR]
-	52N53-91081		MAST,OUTER VM350	ｱｳﾀﾏｽﾄ	1	[RW][HC][EXR]
-	52N53-91091		MAST,OUTER VM366	ｱｳﾀﾏｽﾄ	1	[RW][HC][EXR]
-	52N53-91101		MAST,OUTER VM370	ｱｳﾀﾏｽﾄ	1	[RW][HC][EXR]
-	52N53-91111		MAST,OUTER VM375	ｱｳﾀﾏｽﾄ	1	[RW][HC][EXR]
-	52N53-91121		MAST,OUTER VM400	ｱｳﾀﾏｽﾄ	1	[RW][HC][EXR]
-	52N53-91131		MAST,OUTER VM425	ｱｳﾀﾏｽﾄ	1	[RW][HC][EXR]
-	52N53-91141		MAST,OUTER VM450	ｱｳﾀﾏｽﾄ	1	[RW][HC][EXR]
-	52N53-91151		MAST,OUTER VM475	ｱｳﾀﾏｽﾄ	1	[RW][HC][EXR]
-	52N53-91161		MAST,OUTER VM500	ｱｳﾀﾏｽﾄ	1	[RW][HC][EXR]
-	52N53-91171		MAST,OUTER VM550	ｱｳﾀﾏｽﾄ	1	[RW][HC][EXR]
-	52N53-91181		MAST,OUTER VM600	ｱｳﾀﾏｽﾄ	1	[RW][HC][EXR]
2	277P8-22051		ROLLER,END,119.0	ﾛｰﾗ	2	
-	577P3-74001		ROLLER,END,119.0	ﾛｰﾗ	2	[FC][CSA][CS35][FCS35][FCS45] [FCS55]
3	277P8-22071		SHIM,T-0.5	ｼﾑ	12	
4	277P8-22081		SHIM,T-1.0	ｼﾑ	12	
5	04901-00100		FITTING	ﾌｨｯﾃｨﾝｸﾞ	2	
6	216G8-33401		SLIPPER	ｽﾘｯﾊﾟ	2	
7	216G8-33361		SHIM,T-0.5	ｼﾑ	8	
8	216G8-33371		SHIM,T-1.0	ｼﾑ	4	
9	277P8-32701		CAP	ｷｬｯﾌﾟ	2	
10	214A8-02201		BUSHING	ﾌﾞｯｼﾝｸﾞ	2	
11	01103-16065		BOLT	ﾎﾞﾙﾄ	4	

FIG.177 MAST [VM2N5]

(M7028310) マスト

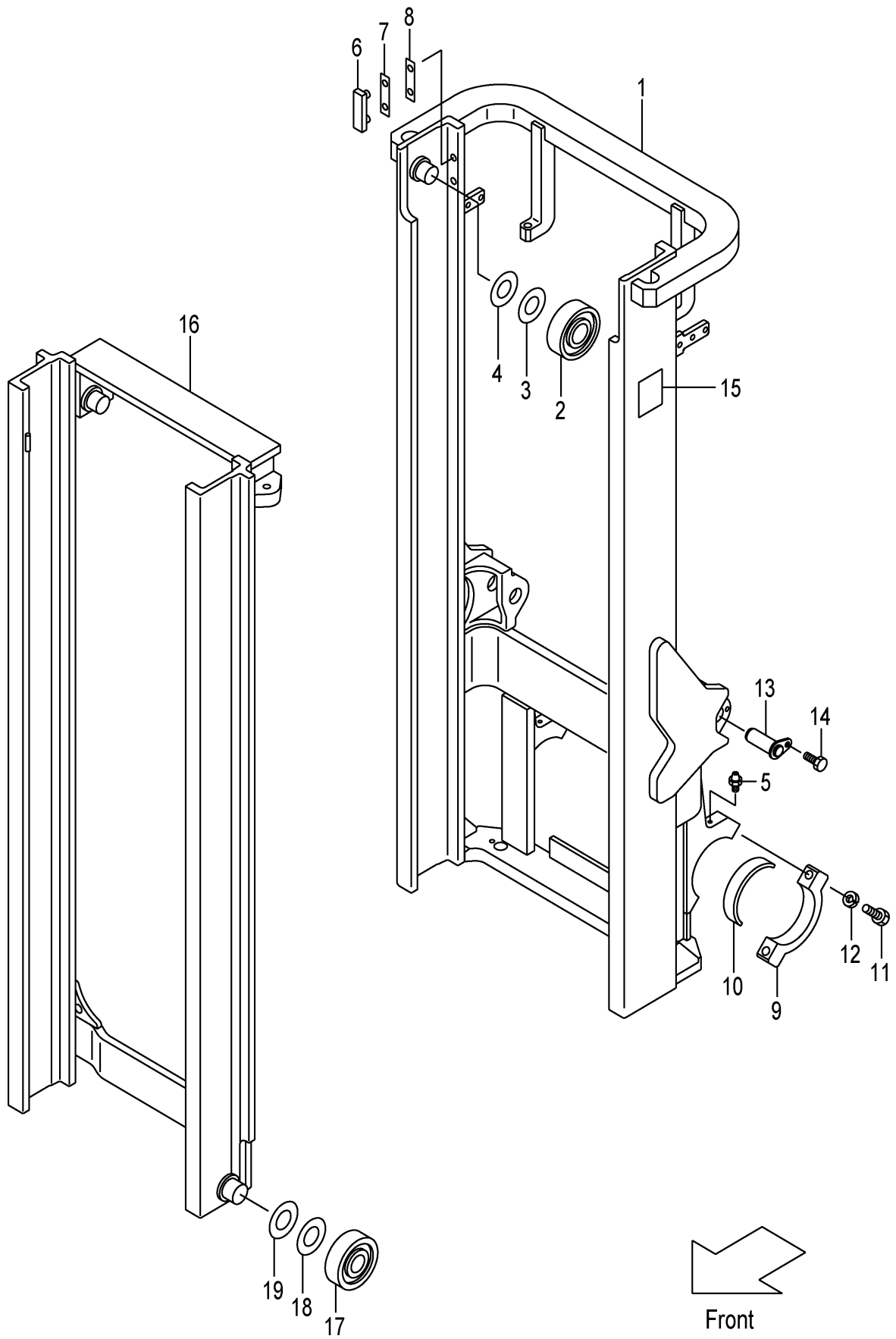

A:VM2N5(2T)
B:VM2N5(2.5T)

Item No	Part No.	Mark	Description		Req'd	Remarks : Serial No.
12	02011-00016		WASHER	ﾜｯｼｬ	4	
13	272K8-52201		PIN	ﾋﾟﾝ	2	MAST NO.1-1097
-	22N58-52501		PIN	ﾋﾟﾝ	2	MAST NO.1098-
14	216G8-52301		BOLT & WASHER	ﾎﾞﾙﾄ&ﾜｯｼｬ	2	
15	23678-06002		PLATE,NAME	ﾌﾟﾚｰﾄ	1	
16	22N58-30411		MAST,INNER VM200	ｲﾝﾅﾏｽﾄ	1	
-	22N58-30421		MAST,INNER VM225	ｲﾝﾅﾏｽﾄ	1	
-	22N58-30431		MAST,INNER VM250	ｲﾝﾅﾏｽﾄ	1	
-	22N58-30441		MAST,INNER VM270	ｲﾝﾅﾏｽﾄ	1	
-	22N58-30451		MAST,INNER VM275	ｲﾝﾅﾏｽﾄ	1	
-	22N58-30401		MAST,INNER VM300	ｲﾝﾅﾏｽﾄ	1	
-	22N58-30461		MAST,INNER VM325	ｲﾝﾅﾏｽﾄ	1	
-	22N58-30471		MAST,INNER VM330	ｲﾝﾅﾏｽﾄ	1	
-	22N58-30481		MAST,INNER VM350	ｲﾝﾅﾏｽﾄ	1	
-	22N58-30491		MAST,INNER VM366	ｲﾝﾅﾏｽﾄ	1	
-	22N58-30501		MAST,INNER VM370	ｲﾝﾅﾏｽﾄ	1	
-	22N58-30511		MAST,INNER VM375	ｲﾝﾅﾏｽﾄ	1	
-	22N58-30521		MAST,INNER VM400	ｲﾝﾅﾏｽﾄ	1	
-	22N58-30531		MAST,INNER VM425	ｲﾝﾅﾏｽﾄ	1	
-	22N58-30541		MAST,INNER VM450	ｲﾝﾅﾏｽﾄ	1	
-	22N58-30551		MAST,INNER VM475	ｲﾝﾅﾏｽﾄ	1	
-	22N58-30561		MAST,INNER VM500	ｲﾝﾅﾏｽﾄ	1	
-	22N58-30571		MAST,INNER VM550	ｲﾝﾅﾏｽﾄ	1	
-	22N58-30581		MAST,INNER VM600	ｲﾝﾅﾏｽﾄ	1	
17	277P8-22051		ROLLER,END,119.0	ﾛｰﾗ	2	
-	277P8-22061		ROLLER,END,119.5	ﾛｰﾗ	(2)	
-	577P3-74001		ROLLER,END,119.0	ﾛｰﾗ	2	[FC][CSA][CS35][FCS35][FCS45] [FCS55]
18	277P8-22071		SHIM,T-0.5	ｼﾑ	12	
19	277P8-22081		SHIM,T-1.0	ｼﾑ	12	

FIG.178 TILT GAUGE [VM2N5/(TG,PPC,PR,PRC,PRX,MPC,MPX)]

(M7028330) ﾃｨﾙﾄｹﾞｰｼﾞ

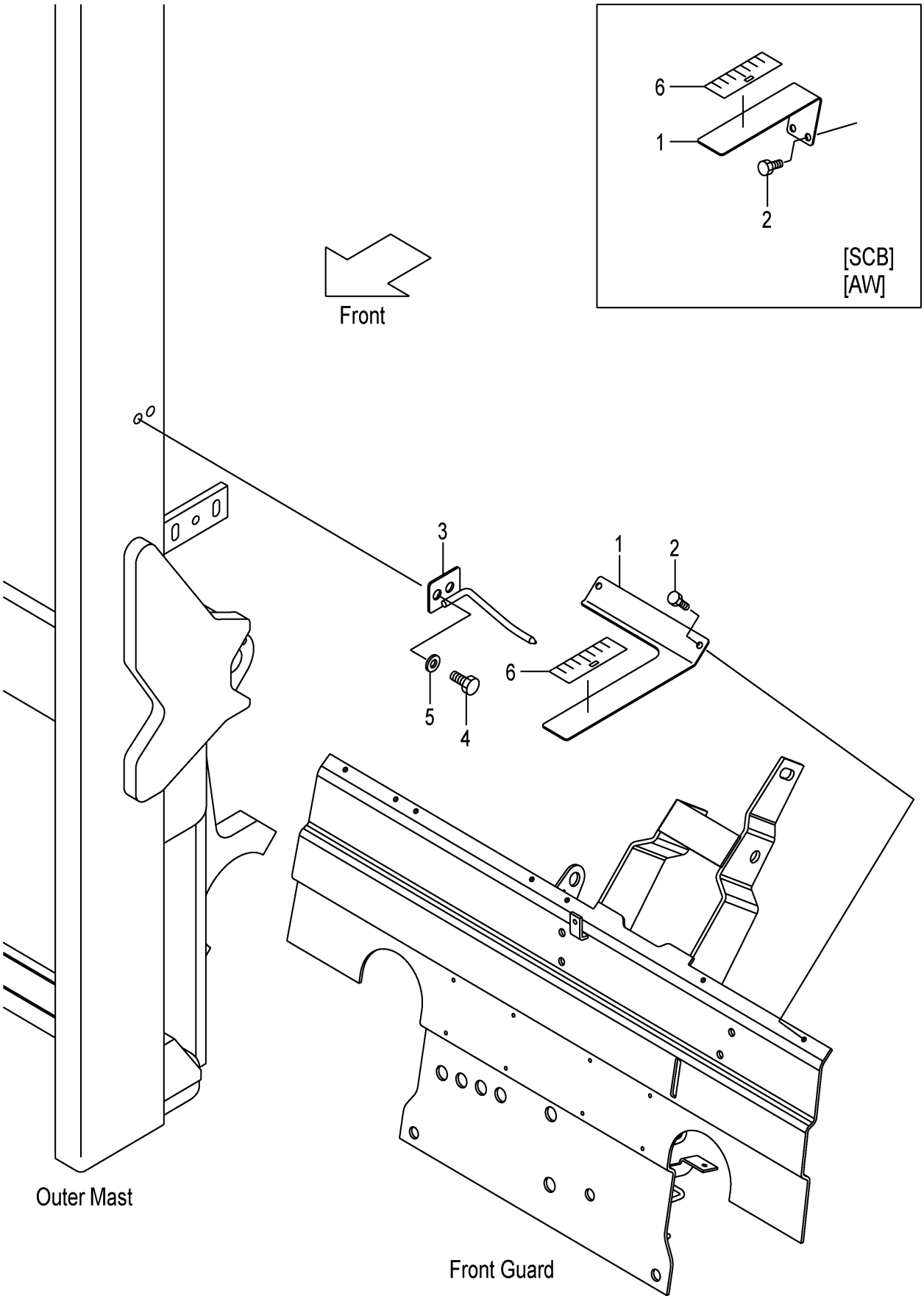

A:VM2N5(2T)
B:VM2N5(2.5T)

Item No	Part No.	Mark	Description		Req'd	Remarks : Serial No.
1	62A89-21811		GAUGE,TILT	ｹﾞｰｼﾞ	1	[(TG,PPC,PR,PRC,PRX,MPC,MPX, PLR)/VM250-600]
-	62A89-21831		GAUGE,TILT	ｹﾞｰｼﾞ	1	[SCB/ (TG,PPC,PR,PRC,PRX,MPC,MPX) /VM250-600]
-	62A89-21831		GAUGE,TILT	ｹﾞｰｼﾞ	1	[AW/ (TG,PPC,PR,PRC,PRX,MPC,MPX) /VM250-600]
2	01183-06020		BOLT	ﾎﾞﾙﾄ	2	[(TG,PPC,PR,PRC,PRX,MPC,MPX, PLR)/VM250-600]
-	01185-08020		BOLT	ﾎﾞﾙﾄ	2	[SCB/ (TG,PPC,PR,PRC,PRX,MPC,MPX) /VM250-600]
-	01185-08020		BOLT	ﾎﾞﾙﾄ	2	[AW/ (TG,PPC,PR,PRC,PRX,MPC,MPX) /VM250-600]
3	62A89-21851		INDICATOR	ｲﾝｼﾞｹｰﾀ	1	[(TG,PPC,PR,PRC,PRX,MPC,MPX, PLR)/VM250-600]
-	62A89-21851		INDICATOR	ｲﾝｼﾞｹｰﾀ	1	[SCB/ (TG,PPC,PR,PRC,PRX,MPC,MPX) /VM250-600]
-	62A89-21851		INDICATOR	ｲﾝｼﾞｹｰﾀ	1	[AW/ (TG,PPC,PR,PRC,PRX,MPC,MPX) /VM250-600]
4	01184-12025		BOLT	ﾎﾞﾙﾄ	2	[(TG,PPC,PR,PRC,PRX,MPC,MPX, PLR)/VM250-600]
-	01184-12025		BOLT	ﾎﾞﾙﾄ	2	[SCB/ (TG,PPC,PR,PRC,PRX,MPC,MPX) /VM250-600]
-	01184-12025		BOLT	ﾎﾞﾙﾄ	2	[AW/ (TG,PPC,PR,PRC,PRX,MPC,MPX) /VM250-600]
5	02000-00012		WASHER	ﾜｯｼｬ	2	[(TG,PPC,PR,PRC,PRX,MPC,MPX, PLR)/VM250-600]
-	02000-00012		WASHER	ﾜｯｼｬ	2	[SCB/ (TG,PPC,PR,PRC,PRX,MPC,MPX) /VM250-600]
-	02000-00012		WASHER	ﾜｯｼｬ	2	[AW/ (TG,PPC,PR,PRC,PRX,MPC,MPX) /VM250-600]
6	62459-23371		SEAL,GAUGE	ｼｰﾙ	1	[(TG,PPC,PR,PRC,PRX,MPC,MPX, PLR)/VM250-600]
-	62459-23371		SEAL,GAUGE	ｼｰﾙ	1	[SCB/ (TG,PPC,PR,PRC,PRX,MPC,MPX) /VM250-600]
-	62459-23371		SEAL,GAUGE	ｼｰﾙ	1	[AW/ (TG,PPC,PR,PRC,PRX,MPC,MPX) /VM250-600]
7	62156-52341	+	SPACER	ｽﾍﾟｰｻ	2	[(TG,PPC,PR,PRC,PRX,MPC,MPX, PLR)/VM250-600]

FIG.178 TILT GAUGE [VM2N5/(TG,PPC,PR,PRC,PRX,MPC,MPX)]

(M7028330) ﾃｨﾙﾄｹﾞｰｼﾞ

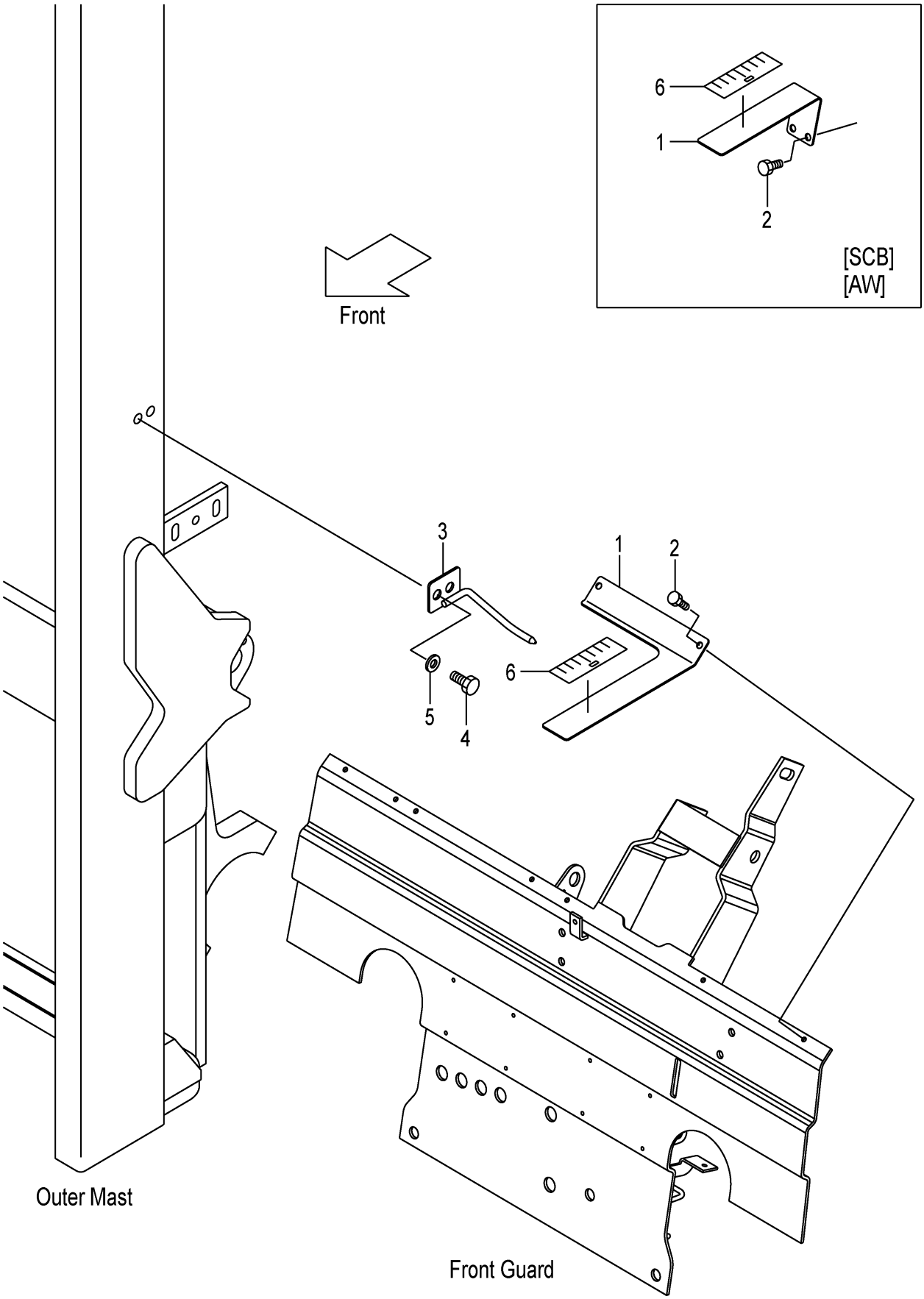

A:VM2N5(2T)
B:VM2N5(2.5T)

Item No	Part No.	Mark	Description	Req'd	Remarks : Serial No.
8	01030-06025	+	SCREW ｽｸﾘｭ	2	[(TG,PPC,PR,PRC,PRX,MPC,MPX, PLR)/VM250-600]
9	02000-00006	+	WASHER ﾜｯｼｬ	2	[(TG,PPC,PR,PRC,PRX,MPC,MPX, PLR)/VM250-600]

FIG.179 LIFT CYLINDER [VM2N5]

(M7028410) リフトシリンダ

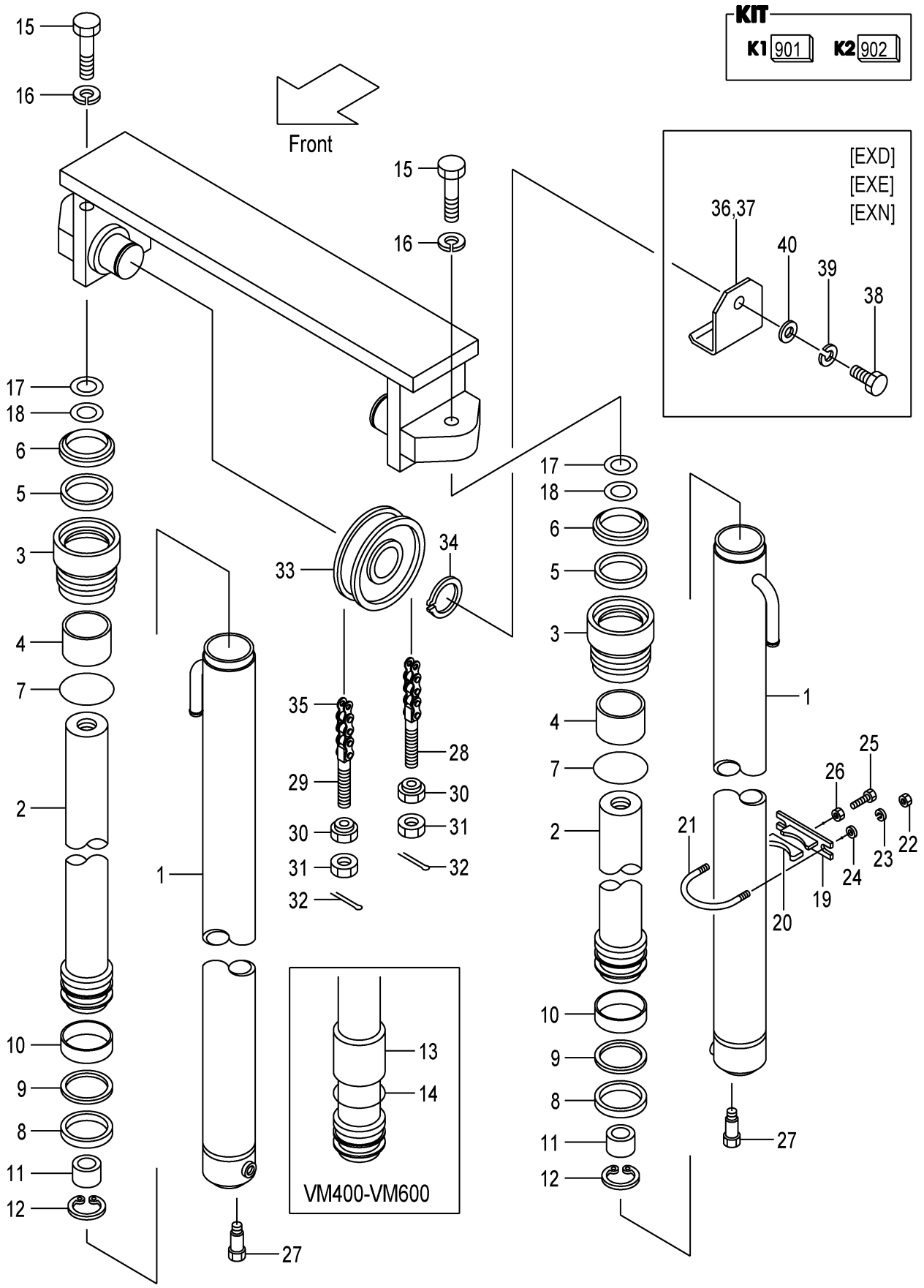

A:VM2N5(2T)
B:VM2N5(2.5T)

Item No	Part No.	Mark	Description		Req'd	Remarks : Serial No.
A1	22N58-40211		CYL-ASSY,LIFT VM200	ﾘﾌﾄｼﾘﾝﾀﾞｱｯｾﾝ	2	INC.1-12
-	22N58-40221		CYL-ASSY,LIFT VM225	ﾘﾌﾄｼﾘﾝﾀﾞｱｯｾﾝ	2	INC.1-12
-	22N58-40231		CYL-ASSY,LIFT VM250	ﾘﾌﾄｼﾘﾝﾀﾞｱｯｾﾝ	2	INC.1-12
-	22N58-40241		CYL-ASSY,LIFT VM270	ﾘﾌﾄｼﾘﾝﾀﾞｱｯｾﾝ	2	INC.1-12
-	22N58-40251		CYL-ASSY,LIFT VM275	ﾘﾌﾄｼﾘﾝﾀﾞｱｯｾﾝ	2	INC.1-12
-	22N58-40201		CYL-ASSY,LIFT VM300	ﾘﾌﾄｼﾘﾝﾀﾞｱｯｾﾝ	2	INC.1-12
-	22N58-40261		CYL-ASSY,LIFT VM325	ﾘﾌﾄｼﾘﾝﾀﾞｱｯｾﾝ	2	INC.1-12
-	22N58-40271		CYL-ASSY,LIFT VM330	ﾘﾌﾄｼﾘﾝﾀﾞｱｯｾﾝ	2	INC.1-12
-	22N58-40281		CYL-ASSY,LIFT VM350	ﾘﾌﾄｼﾘﾝﾀﾞｱｯｾﾝ	2	INC.1-12
-	22N58-40291		CYL-ASSY,LIFT VM366	ﾘﾌﾄｼﾘﾝﾀﾞｱｯｾﾝ	2	INC.1-12
-	22N58-40301		CYL-ASSY,LIFT VM370	ﾘﾌﾄｼﾘﾝﾀﾞｱｯｾﾝ	2	INC.1-12
-	22N58-40311		CYL-ASSY,LIFT VM375	ﾘﾌﾄｼﾘﾝﾀﾞｱｯｾﾝ	2	INC.1-12
-	22N58-40321		CYL-ASSY,LIFT VM400	ﾘﾌﾄｼﾘﾝﾀﾞｱｯｾﾝ	2	INC.1-14
-	22N58-40331		CYL-ASSY,LIFT VM425	ﾘﾌﾄｼﾘﾝﾀﾞｱｯｾﾝ	2	INC.1-14
-	22N58-40341		CYL-ASSY,LIFT VM450	ﾘﾌﾄｼﾘﾝﾀﾞｱｯｾﾝ	2	INC.1-14
-	22N58-40351		CYL-ASSY,LIFT VM475	ﾘﾌﾄｼﾘﾝﾀﾞｱｯｾﾝ	2	INC.1-14
-	22N58-40361		CYL-ASSY,LIFT VM500	ﾘﾌﾄｼﾘﾝﾀﾞｱｯｾﾝ	2	INC.1-14
-	22N58-40371		CYL-ASSY,LIFT VM550	ﾘﾌﾄｼﾘﾝﾀﾞｱｯｾﾝ	2	INC.1-14
-	22N58-40381		CYL-ASSY,LIFT VM600	ﾘﾌﾄｼﾘﾝﾀﾞｱｯｾﾝ	2	INC.1-14
901	B-3050B-00119	K1	KIT,CAP	ｷｬｯﾌﾟｷｯﾄ	2	INC.3,4
902	B-3050A-00093	K2	KIT,REPAIR	ﾘﾍﾟｱｷｯﾄ	2	INC.5-9
1	B-B6567-08101		BODY,CYL VM200	ﾎﾞﾃﾞｨ	2	
-	B-B6567-08201		BODY,CYL VM225	ﾎﾞﾃﾞｨ	2	
-	B-B6567-08301		BODY,CYL VM250	ﾎﾞﾃﾞｨ	2	
-	B-B6567-08401		BODY,CYL VM270	ﾎﾞﾃﾞｨ	2	
-	B-B6567-08501		BODY,CYL VM275	ﾎﾞﾃﾞｨ	2	
-	B-B6567-08601		BODY,CYL VM300	ﾎﾞﾃﾞｨ	2	
-	B-B6567-08701		BODY,CYL VM325	ﾎﾞﾃﾞｨ	2	
-	B-B6567-08801		BODY,CYL VM330	ﾎﾞﾃﾞｨ	2	
-	B-B6567-08901		BODY,CYL VM350	ﾎﾞﾃﾞｨ	2	
-	B-B6567-09001		BODY,CYL VM366	ﾎﾞﾃﾞｨ	2	
-	B-B6567-09101		BODY,CYL VM370	ﾎﾞﾃﾞｨ	2	
-	B-B6567-09201		BODY,CYL VM375	ﾎﾞﾃﾞｨ	2	
-	B-B6567-09301		BODY,CYL VM400	ﾎﾞﾃﾞｨ	2	
-	B-B6567-09401		BODY,CYL VM425	ﾎﾞﾃﾞｨ	2	
-	B-B6567-09501		BODY,CYL VM450	ﾎﾞﾃﾞｨ	2	
-	B-B6567-09601		BODY,CYL VM475	ﾎﾞﾃﾞｨ	2	
-	B-B6567-09701		BODY,CYL VM500	ﾎﾞﾃﾞｨ	2	
-	B-B6567-09801		BODY,CYL VM550	ﾎﾞﾃﾞｨ	2	
-	B-B6567-09901		BODY,CYL VM600	ﾎﾞﾃﾞｨ	2	
2	B-B6567-08102		ROD,PISTON VM200	ﾛｯﾄﾞ	2	
-	B-B6567-08202		ROD,PISTON VM225	ﾛｯﾄﾞ	2	
-	B-B6567-08302		ROD,PISTON VM250	ﾛｯﾄﾞ	2	
-	B-B6567-08402		ROD,PISTON VM270	ﾛｯﾄﾞ	2	
-	B-B6567-08502		ROD,PISTON VM275	ﾛｯﾄﾞ	2	
-	B-B6567-08602		ROD,PISTON VM300	ﾛｯﾄﾞ	2	
-	B-B6567-08702		ROD,PISTON VM325	ﾛｯﾄﾞ	2	
-	B-B6567-08802		ROD,PISTON VM330	ﾛｯﾄﾞ	2	
-	B-B6567-08902		ROD,PISTON VM350	ﾛｯﾄﾞ	2	
-	B-B6567-09002		ROD,PISTON VM366	ﾛｯﾄﾞ	2	

FIG.179 LIFT CYLINDER [VM2N5]

(M7028410) リフトシリンダ

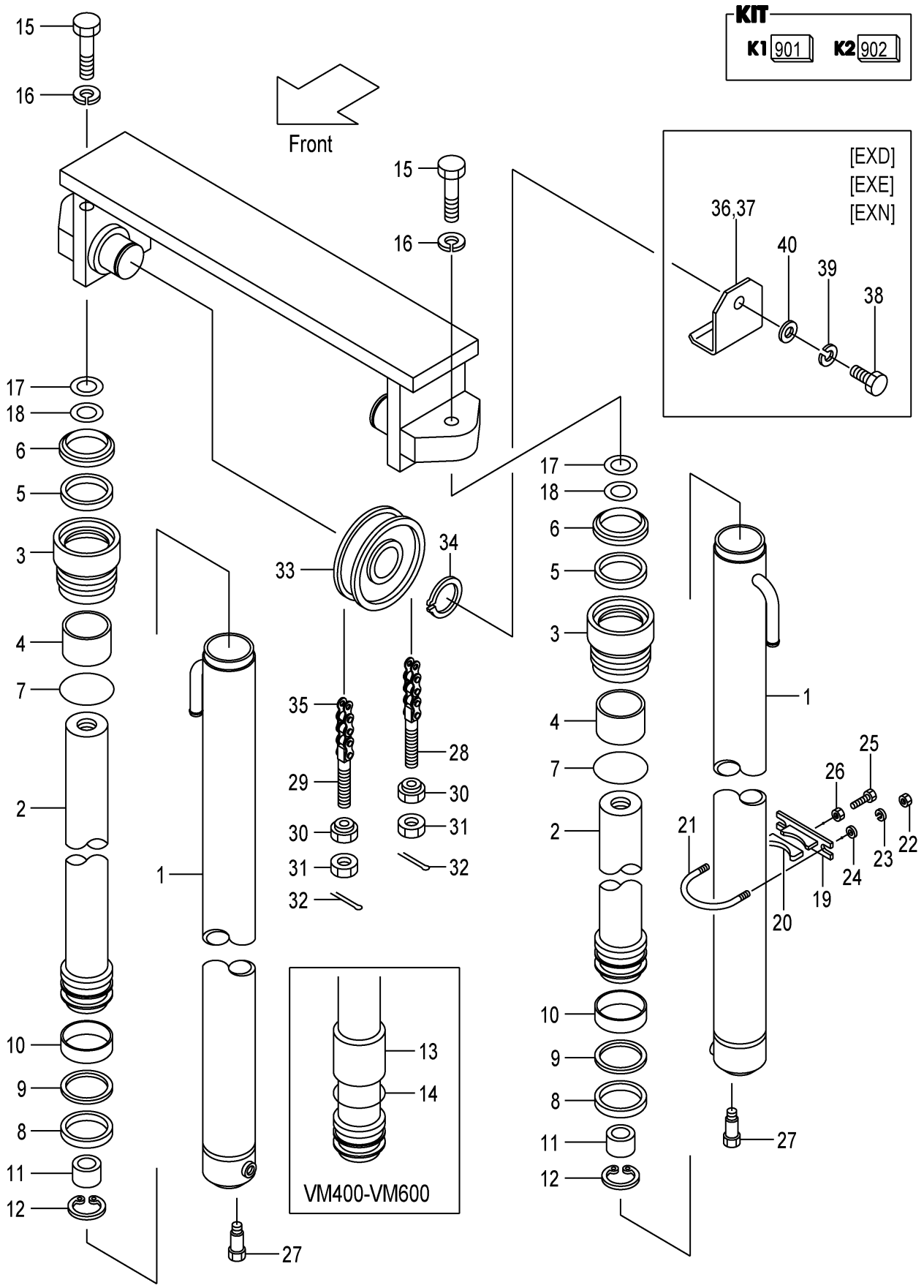

A:VM2N5(2T)
B:VM2N5(2.5T)

Item No	Part No.	Mark	Description		Req'd	Remarks : Serial No.
-	B-B6567-09102		ROD,PISTON VM370	ﾛｯﾄﾞ	2	
-	B-B6567-09202		ROD,PISTON VM375	ﾛｯﾄﾞ	2	
-	B-B6567-09302		ROD,PISTON VM400	ﾛｯﾄﾞ	2	
-	B-B6567-09402		ROD,PISTON VM425	ﾛｯﾄﾞ	2	
-	B-B6567-09502		ROD,PISTON VM450	ﾛｯﾄﾞ	2	
-	B-B6567-09602		ROD,PISTON VM475	ﾛｯﾄﾞ	2	
-	B-B6567-09702		ROD,PISTON VM500	ﾛｯﾄﾞ	2	
-	B-B6567-09802		ROD,PISTON VM550	ﾛｯﾄﾞ	2	
-	B-B6567-09902		ROD,PISTON VM600	ﾛｯﾄﾞ	2	
3	B-30121-50102	*	CAP	ｷｬｯﾌﾟ	2	
4	B-30131-40017	*	BUSHING	ﾌﾞｯｼﾝｸﾞ	2	
5	B-30961-04012	*	U-RING	Uﾘﾝｸﾞ	2	
6	B-30191-40025	*	RING,WIPER	ﾘﾝｸﾞ	2	
7	B-30161-91774	*	O-RING	Oﾘﾝｸﾞ	2	
8	B-30161-50046	*	U-RING	Uﾘﾝｸﾞ	2	
9	B-30461-50039	*	RING,BACK-UP	ﾘﾝｸﾞ	2	
10	B-30131-50018		BUSHING	ﾌﾞｯｼﾝｸﾞ	2	
11	B-B6551-91008		RING,CUSION	ﾘﾝｸﾞ	2	
12	B-30141-91049		RING,SNAP	ﾘﾝｸﾞ	2	
13	B-B6111-40022		SPACER	ｽﾍﾟｰｻ	2	(VM400-500)
-	B-B6111-40024		SPACER	ｽﾍﾟｰｻ	2	(VM550,600)
14	B-95151-04000		O-RING	Oﾘﾝｸﾞ	2	
15	01103-14040		BOLT	ﾎﾞﾙﾄ	2	
16	02011-00014		WASHER	ﾜｯｼｬ	2	
17	22517-40051		SHIM,T-0.2	ｼﾑ	4	
18	22717-40081		SHIM,T-0.5	ｼﾑ	4	
A2	225N8-43021		SUPPORT-ASSY	ｻﾎﾟｰﾄｱｯｾﾝ	2	(VM200-500) INC.19,20
-	225N8-43021		SUPPORT-ASSY	ｻﾎﾟｰﾄｱｯｾﾝ	4	(VM550,600) INC.19,20
19	22N58-43011		SUPPORT	ｻﾎﾟｰﾄ	2	(VM200-500)
-	22N58-43011		SUPPORT	ｻﾎﾟｰﾄ	4	(VM550,600)
20	24868-42111		RUBBER	ﾗﾊﾞｰ	2	(VM200-500)
-	24868-42111		RUBBER	ﾗﾊﾞｰ	4	(VM550,600)
21	234A8-42551		U-BOLT	Uﾎﾞﾙﾄ	2	(VM200-500)
-	234A8-42551		U-BOLT	Uﾎﾞﾙﾄ	4	(VM550,600)
22	01400-00010		NUT	ﾅｯﾄ	4	(VM200-500)
-	01400-00010		NUT	ﾅｯﾄ	8	(VM550,600)
23	02010-20010		WASHER	ﾜｯｼｬ	4	(VM200-500)
-	02010-20010		WASHER	ﾜｯｼｬ	8	(VM550,600)
24	02000-20010		WASHER	ﾜｯｼｬ	4	(VM200-500)
-	02000-20010		WASHER	ﾜｯｼｬ	8	(VM550,600)
25	01120-12040		BOLT	ﾎﾞﾙﾄ	2	(VM200-500)
-	01120-12040		BOLT	ﾎﾞﾙﾄ	4	(VM550,600)
26	01400-00012		NUT	ﾅｯﾄ	2	(VM200-500)
-	01400-00012		NUT	ﾅｯﾄ	4	(VM550,600)
27	214A8-42661		BOLT	ﾎﾞﾙﾄ	2	
28	23500-82001		PIN,ANCHOR	ﾋﾟﾝ	2	
-	23658-42531		PIN,ANCHOR	ﾋﾟﾝ	2	[FC][CSA][CS35][FCS35][FCS45] [FCS55]
29	52672-72231		PIN,ANCHOR	ﾋﾟﾝ	2	

FIG.179 LIFT CYLINDER [VM2N5]

(M7028410) リフトシリンダ

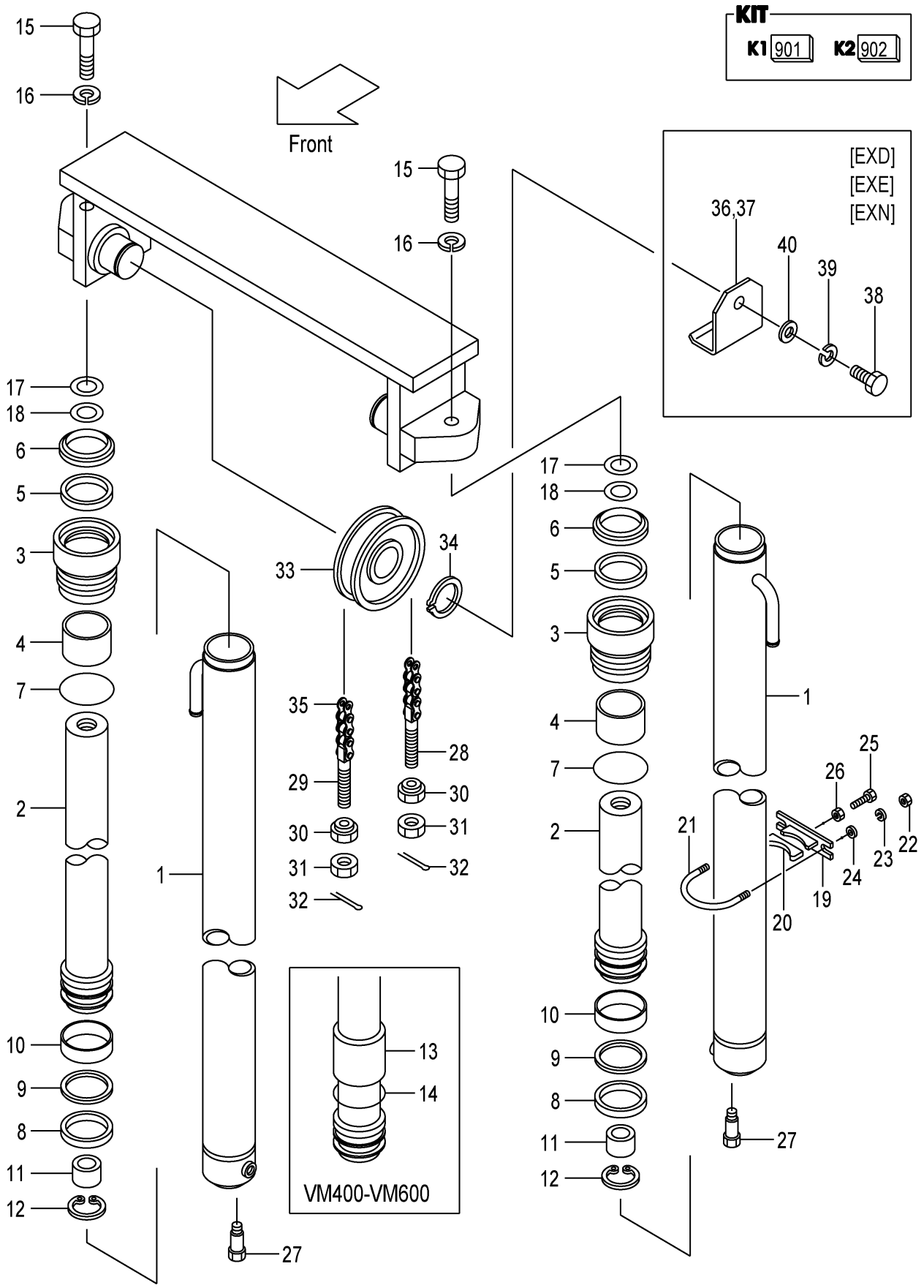

A:VM2N5(2T)
B:VM2N5(2.5T)

Item No	Part No.	Mark	Description		Req'd	Remarks : Serial No.
-	22218-42111		PIN,ANCHOR	ﾋﾟﾝ	2	[FC][CSA][CS35][FCS35][FCS45] [FCS55]
30	22218-40191		NUT	ﾅｯﾄ	4	
31	01400-00018		NUT	ﾅｯﾄ	4	
32	02200-03030		PIN	ﾋﾟﾝ	4	
33	234A8-43501		SHEAVE	ｼｰﾌﾞ	2	
34	22208-40031		SHEAVE	ｼｰﾌﾞ	2	[FC][CSA][CS35][FCS35][FCS45] [FCS55]
-	02100-00040		RING,SNAP	ﾘﾝｸﾞ	2	
35	22679-45711		CHAIN,LEAF VM200	ﾁｪｰﾝ	2	
-	22679-45771		CHAIN,LEAF VM225	ﾁｪｰﾝ	2	
-	22679-45851		CHAIN,LEAF VM250	ﾁｪｰﾝ	2	
-	22679-45891		CHAIN,LEAF VM270	ﾁｪｰﾝ	2	
-	22679-45911		CHAIN,LEAF VM275	ﾁｪｰﾝ	2	
-	22679-45971		CHAIN,LEAF VM300	ﾁｪｰﾝ	2	
-	22679-46031		CHAIN,LEAF VM325	ﾁｪｰﾝ	2	
-	22679-46051		CHAIN,LEAF VM330	ﾁｪｰﾝ	2	
-	22679-46111		CHAIN,LEAF VM350	ﾁｪｰﾝ	2	
-	22679-46151		CHAIN,LEAF VM366	ﾁｪｰﾝ	2	
-	22679-46151		CHAIN,LEAF VM370	ﾁｪｰﾝ	2	
-	22679-46171		CHAIN,LEAF VM375	ﾁｪｰﾝ	2	
-	22679-46271		CHAIN,LEAF VM400	ﾁｪｰﾝ	2	
-	22679-46331		CHAIN,LEAF VM425	ﾁｪｰﾝ	2	
-	22679-46391		CHAIN,LEAF VM450	ﾁｪｰﾝ	2	
-	22679-46451		CHAIN,LEAF VM475	ﾁｪｰﾝ	2	
-	22679-46531		CHAIN,LEAF VM500	ﾁｪｰﾝ	2	
-	22679-46691		CHAIN,LEAF VM550	ﾁｪｰﾝ	2	
-	22679-46811		CHAIN,LEAF VM600	ﾁｪｰﾝ	2	
-	09001-10043		CHAIN,ROLLER VM200	ﾁｪｰﾝ	2	[FC][FCS35][FCS45][FCS55]
-	09001-10047		CHAIN,ROLLER VM225	ﾁｪｰﾝ	2	[FC][FCS35][FCS45][FCS55]
-	09001-10051		CHAIN,ROLLER VM250	ﾁｪｰﾝ	2	[FC][FCS35][FCS45][FCS55]
-	09001-10053		CHAIN,ROLLER VM270	ﾁｪｰﾝ	2	[FC][FCS35][FCS45][FCS55]
-	09001-10055		CHAIN,ROLLER VM275	ﾁｪｰﾝ	2	[FC][FCS35][FCS45][FCS55]
-	09001-10059		CHAIN,ROLLER VM300	ﾁｪｰﾝ	2	[FC][FCS35][FCS45][FCS55]
-	09001-10063		CHAIN,ROLLER VM325	ﾁｪｰﾝ	2	[FC][FCS35][FCS45][FCS55]
-	09001-10063		CHAIN,ROLLER VM330	ﾁｪｰﾝ	2	[FC][FCS35][FCS45][FCS55]
-	09001-10067		CHAIN,ROLLER VM350	ﾁｪｰﾝ	2	[FC][FCS35][FCS45][FCS55]
-	09001-10069		CHAIN,ROLLER VM366	ﾁｪｰﾝ	2	[FC][FCS35][FCS45][FCS55]
-	09001-10069		CHAIN,ROLLER VM370	ﾁｪｰﾝ	2	[FC][FCS35][FCS45][FCS55]
-	09001-10071		CHAIN,ROLLER VM375	ﾁｪｰﾝ	2	[FC][FCS35][FCS45][FCS55]
-	09001-10075		CHAIN,ROLLER VM400	ﾁｪｰﾝ	2	[FC][FCS35][FCS45][FCS55]
-	09001-10079		CHAIN,ROLLER VM425	ﾁｪｰﾝ	2	[FC][FCS35][FCS45][FCS55]
-	09001-10083		CHAIN,ROLLER VM450	ﾁｪｰﾝ	2	[FC][FCS35][FCS45][FCS55]
-	09001-10087		CHAIN,ROLLER VM475	ﾁｪｰﾝ	2	[FC][FCS35][FCS45][FCS55]
-	09001-10091		CHAIN,ROLLER VM500	ﾁｪｰﾝ	2	[FC][FCS35][FCS45][FCS55]
-	09001-10101		CHAIN,ROLLER VM550	ﾁｪｰﾝ	2	[FC][FCS35][FCS45][FCS55]
-	09001-10109		CHAIN,ROLLER VM600	ﾁｪｰﾝ	2	[FC][FCS35][FCS45][FCS55]
36	514A3-04201		COVER,CHAIN,A	ｶﾊﾞｰ	1	[EXD][EXE][EXN]
37	514A3-04211		COVER,CHAIN,B	ｶﾊﾞｰ	1	[EXD][EXE][EXN]
38	01100-16016		BOLT	ﾎﾞﾙﾄ	2	[EXD][EXE][EXN]

FIG.179 LIFT CYLINDER [VM2N5]

(M7028410) リフトシリンダ

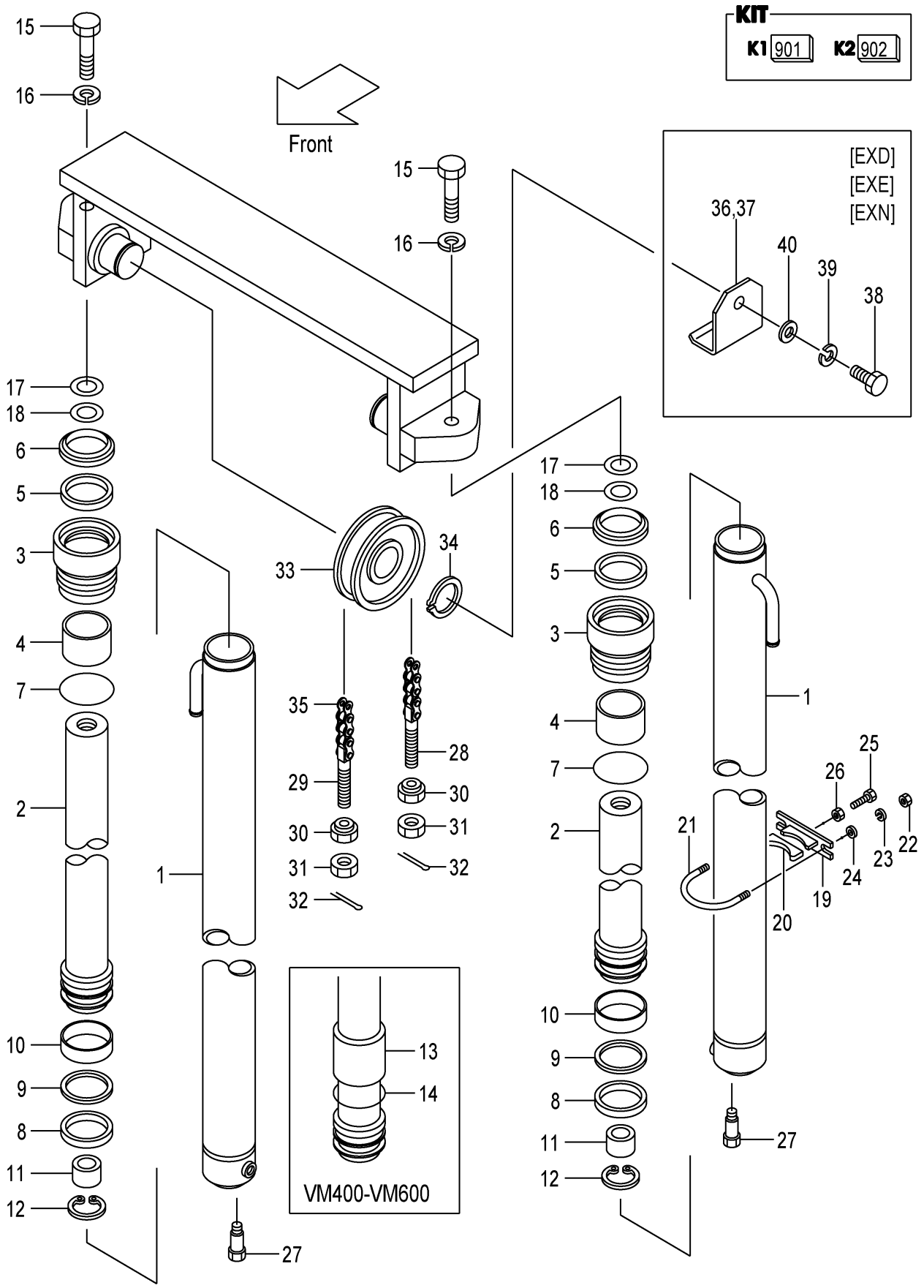

A:VM2N5(2T)
B:VM2N5(2.5T)

Item No	Part No.	Mark	Description	Req'd	Remarks : Serial No.
39	02010-00016		WASHER ﾜｯｼｬ	2	[EXD][EXE][EXN]
40	02000-00016		WASHER ﾜｯｼｬ	2	[EXD][EXE][EXN]

FIG.180 MAST PIPING [VM2N5]

(M7028420) マストパイピング

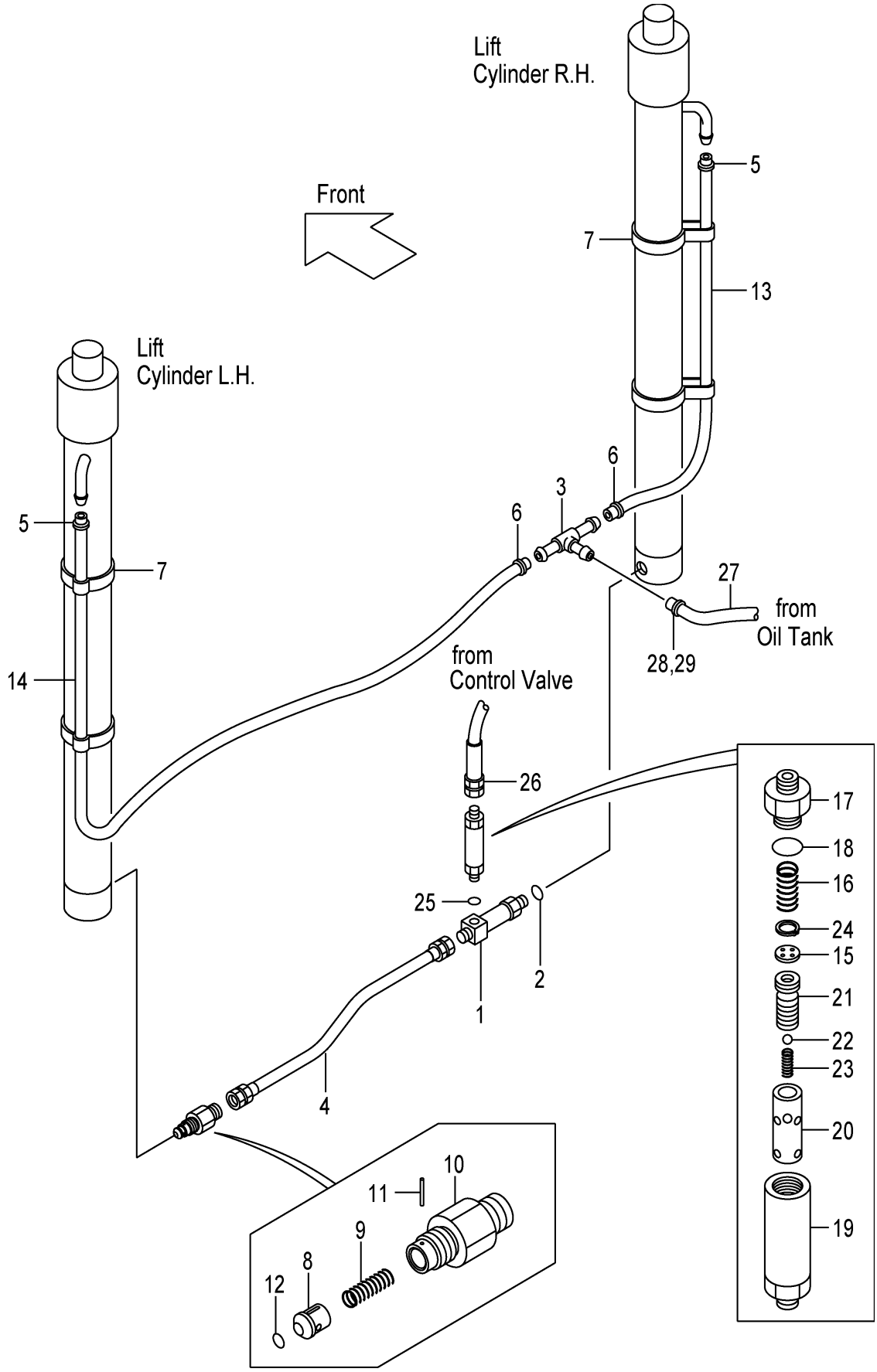

A:VM2N5(2T)
B:VM2N5(2.5T)

Item No	Part No.	Mark	Description		Req'd	Remarks : Serial No.
A1	234A8-41101		THREE-WAY-ASSY	ｽﾘｰｳｪｲｱｯｾﾝ	1	INC.1,2
1	NO PART NO.	#	THREE-WAY	ｽﾘｰｳｴｲ	1	
2	03320-00140		O-RING	Oﾘﾝｸﾞ	1	
3	53675-55051		THREE-WAY	ｽﾘｰｳｴｲ	1	
4	234A8-02201		HOSE	ﾎｰｽ	1	
5	24329-46201		CLIP	ｸﾘｯﾌﾟ	2	
6	04911-00021		CLIP	ｸﾘｯﾌﾟ	2	
7	22N58-45001		BAND	ﾊﾞﾝﾄﾞ	4	
A2	234A8-40701		VALVE-ASSY,CUT	ｶｯﾄﾊﾞﾙﾌﾞｱｯｾﾝ	1	INC.8-12
8	234A8-42602		PISTON	ﾋﾟｽﾄﾝ	1	
9	234A8-42611		SPRING	ｽﾌﾟﾘﾝｸﾞ	1	
10	234A8-42622		NIPPLE	ﾆｯﾌﾟﾙ	1	
11	02270-01014		PIN	ﾋﾟﾝ	1	
12	03320-00140		O-RING	Oﾘﾝｸﾞ	1	
13	24328-40110		HOSE,RH VM200	ﾎｰｽ	1	
-	24328-40120		HOSE,RH VM225	ﾎｰｽ	1	
-	24328-40135		HOSE,RH VM250	ﾎｰｽ	1	
-	24328-40145		HOSE,RH VM270	ﾎｰｽ	1	
-	24328-40145		HOSE,RH VM275	ﾎｰｽ	1	
-	24328-40160		HOSE,RH VM300	ﾎｰｽ	1	
-	24328-40170		HOSE,RH VM325	ﾎｰｽ	1	
-	24328-40175		HOSE,RH VM330	ﾎｰｽ	1	
-	24328-40185		HOSE,RH VM350	ﾎｰｽ	1	
-	24328-40195		HOSE,RH VM366	ﾎｰｽ	1	
-	24328-40195		HOSE,RH VM370	ﾎｰｽ	1	
-	24328-40195		HOSE,RH VM375	ﾎｰｽ	1	
-	24328-40215		HOSE,RH VM400	ﾎｰｽ	1	
-	24328-40225		HOSE,RH VM425	ﾎｰｽ	1	
-	24328-40240		HOSE,RH VM450	ﾎｰｽ	1	
-	24328-40250		HOSE,RH VM475	ﾎｰｽ	1	
-	24328-40265		HOSE,RH VM500	ﾎｰｽ	1	
-	24328-40295		HOSE,RH VM550	ﾎｰｽ	1	
	24328-40320		HOSE,RH VM600	ﾎｰｽ	1	
14	24328-40145		HOSE,LH VM200	ﾎｰｽ	1	
	24328-40165		HOSE,LH VM225	ﾎｰｽ	1	
-	24328-40170		HOSE,LH VM250	ﾎｰｽ	1	
-	24328-40180		HOSE,LH VM270	ﾎｰｽ	1	
-	24328-40180		HOSE,LH VM275	ﾎｰｽ	1	
-	24328-40190		HOSE,LH VM300	ﾎｰｽ	1	
-	24328-40205		HOSE,LH VM325	ﾎｰｽ	1	
-	24328-40210		HOSE,LH VM330	ﾎｰｽ	1	
-	24328-40220		HOSE,LH VM350	ﾎｰｽ	1	
-	24328-40230		HOSE,LH VM366	ﾎｰｽ	1	
-	24328-40230		HOSE,LH VM370	ﾎｰｽ	1	
-	24328-40230		HOSE,LH VM375	ﾎｰｽ	1	
-	24328-40250		HOSE,LH VM400	ﾎｰｽ	1	
-	24328-40260		HOSE,LH VM425	ﾎｰｽ	1	
-	24328-40275		HOSE,LH VM450	ﾎｰｽ	1	
-	24328-40285		HOSE,LH VM475	ﾎｰｽ	1	
-	24328-40300		HOSE,LH VM500	ﾎｰｽ	1	

FIG.180 MAST PIPING [VM2N5]

(M7028420) マストパイピング

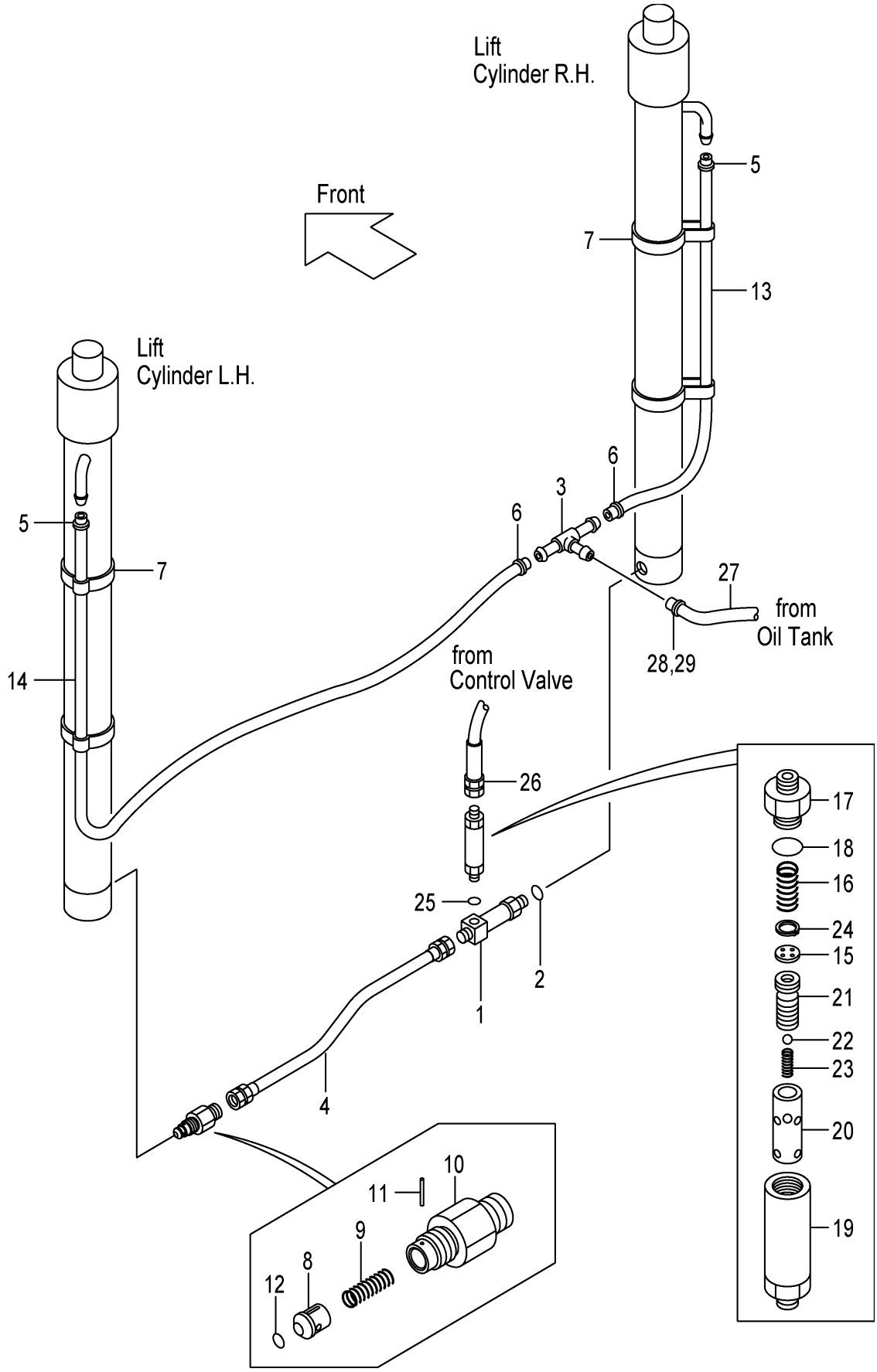

A:VM2N5(2T)
B:VM2N5(2.5T)

Item No	Part No.	Mark	Description		Req'd	Remarks : Serial No.
-	24328-40330		HOSE,LH VM550	ﾎｰｽ	1	
-	24328-40355		HOSE,LH VM600	ﾎｰｽ	1	
A3	234A8-41001		REGURATOR-ASSY,FLOW	ﾌﾛｰﾚｷﾞｭﾚｰﾀｱｯｾﾝ	1	INC.15-24
15	NO PART NO.	#	PLATE	ﾌﾟﾚｰﾄ	1	
16	27979-43101		SPRING	ｽﾌﾟﾘﾝｸﾞ	1	
17	NO PART NO.	#	NIPPLE	ﾆｯﾌﾟﾙ	1	
18	03320-00280		O-RING	Oﾘﾝｸﾞ	1	
19	NO PART NO.	#	CASE	ｹｰｽ	1	
20	NO PART NO.	#	SLEEVE	ｽﾘｰﾌﾞ	1	
21	NO PART NO.	#	PISTON	ﾋﾟｽﾄﾝ	1	
22	24459-42951		BALL,NYLON	ﾎﾞｰﾙ	1	
23	214A8-44151		SPRING	ｽﾌﾟﾘﾝｸﾞ	1	
24	02110-00018		RING,SNAP	ﾘﾝｸﾞ	1	
25	03320-00180		O-RING	Oﾘﾝｸﾞ	1	
26	234A8-02101		HOSE	ﾎｰｽ	1	
27	24328-40150		HOSE	ﾎｰｽ	1	
28	04911-00021		CLIP	ｸﾘｯﾌﾟ	1	
29	24329-46201		CLIP	ｸﾘｯﾌﾟ	1	

FIG.181 FORK [VFM2N5]

(M7028140) フォーク

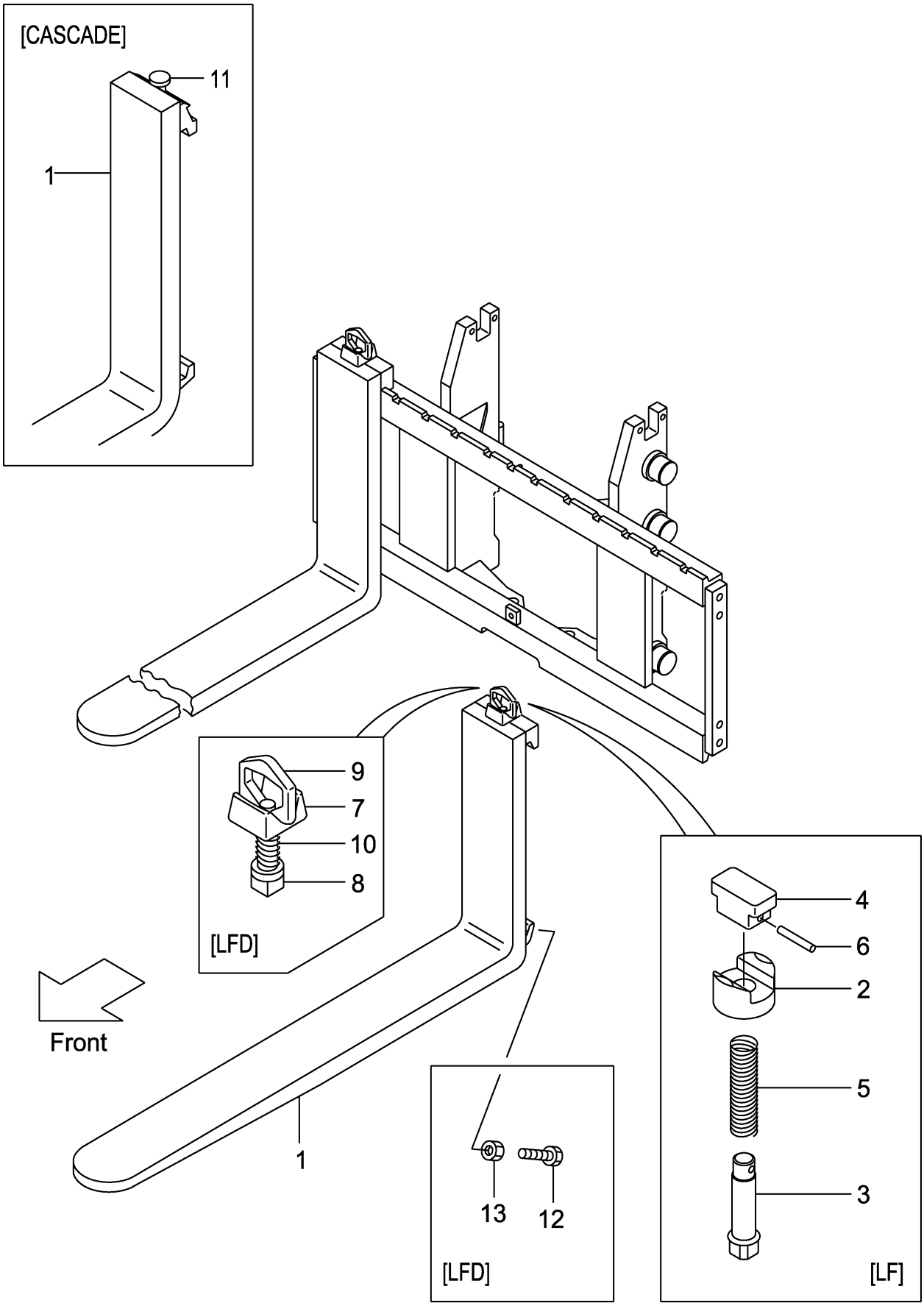

A:VFM2N5(2T)
B:VFM2N5(2.5T)

Item No	Part No.	Mark	Description		Req'd	Remarks : Serial No.
1	231A8-10101		FORK	ﾌｫｰｸ	2	A
						(L=920) INC.2-6
-	214A8-10512		FORK	ﾌｫｰｸ	2	B
						(L=1070) INC.2-6
-	231A8-10171		FORK	ﾌｫｰｸ	2	A
						[LF090] INC.2-6
-	231F8-10571		FORK	ﾌｫｰｸ	2	B
						[LF090] INC.2-6
-	231A8-10101		FORK	ﾌｫｰｸ	2	A
						[LF092] INC.2-6
-	231F8-10501		FORK	ﾌｫｰｸ	2	B
						[LF092] INC.2-6
-	214A8-10512		FORK	ﾌｫｰｸ	2	[EX] INC.2-6
-	214A8-10582		FORK	ﾌｫｰｸ	2	[LF100] INC.2-6
-	214A8-10512		FORK	ﾌｫｰｸ	2	[LF107] INC.2-6
-	214A8-10592		FORK	ﾌｫｰｸ	2	[LF110] INC.2-6
-	214A8-10602		FORK	ﾌｫｰｸ	2	[LF120] INC.2-6
-	214A8-10522		FORK	ﾌｫｰｸ	2	[LF122] INC.2-6
-	214A8-10612		FORK	ﾌｫｰｸ	2	[LF130] INC.2-6
-	214A8-10532		FORK	ﾌｫｰｸ	2	[LF137] INC.2-6
-	214A8-10622		FORK	ﾌｫｰｸ	2	[LF140] INC.2-6
-	214A8-10632		FORK	ﾌｫｰｸ	2	[LF150] INC.2-6
-	214A8-10542		FORK	ﾌｫｰｸ	2	[LF152] INC.2-6
-	214A8-10642		FORK	ﾌｫｰｸ	2	[LF160] INC.2-6
-	214A8-10552		FORK	ﾌｫｰｸ	2	[LF167] INC.2-6
-	214A8-10653		FORK	ﾌｫｰｸ	2	[LF170] INC.2-6
-	214A8-10663		FORK	ﾌｫｰｸ	2	[LF180] INC.2-6
-	214A8-10563		FORK	ﾌｫｰｸ	2	[LF182] INC.2-6
-	214A8-10673		FORK	ﾌｫｰｸ	2	[LF190] INC.2-6
-	214A8-10683		FORK	ﾌｫｰｸ	2	[LF200] INC.2-6
-	234A8-10571		FORK	ﾌｫｰｸ	2	[LFD090] INC.7-10
-	234A8-10501		FORK	ﾌｫｰｸ	2	[LFD092] INC.7-10
-	234A8-10581		FORK	ﾌｫｰｸ	2	[LFD100] INC.7-10
-	234A8-10511		FORK	ﾌｫｰｸ	2	[LFD107] INC.7-10
-	234A8-10591		FORK	ﾌｫｰｸ	2	[LFD110] INC.7-10
-	234A8-10601		FORK	ﾌｫｰｸ	2	[LFD120] INC.7-10
-	234A8-10521		FORK	ﾌｫｰｸ	2	[LFD122] INC.7-10
-	234A8-10611		FORK	ﾌｫｰｸ	2	[LFD130] INC.7-10
-	234A8-10531		FORK	ﾌｫｰｸ	2	[LFD137] INC.7-10
-	234A8-10621		FORK	ﾌｫｰｸ	2	[LFD140] INC.7-10
-	234A8-10631		FORK	ﾌｫｰｸ	2	[LFD150] INC.7-10
-	234A8-10541		FORK	ﾌｫｰｸ	2	[LFD152] INC.7-10
-	234A8-10641		FORK	ﾌｫｰｸ	2	[LFD160] INC.7-10
-	234A8-10551		FORK	ﾌｫｰｸ	2	[LFD167] INC.7-10
-	234A8-10652		FORK	ﾌｫｰｸ	2	[LFD170] INC.7-10
-	234A8-10662		FORK	ﾌｫｰｸ	2	[LFD180] INC.7-10
-	234A8-10562		FORK	ﾌｫｰｸ	2	[LFD182] INC.7-10
-	234A8-10672		FORK	ﾌｫｰｸ	2	[LFD190] INC.7-10
-	234A8-10682		FORK	ﾌｫｰｸ	2	[LFD200] INC.7-10
-	22N58-10501		FORK	ﾌｫｰｸ	2	[LF092/CASCADE] INC.11

FIG.181 FORK [VFM2N5]

(M7028140) フォーク

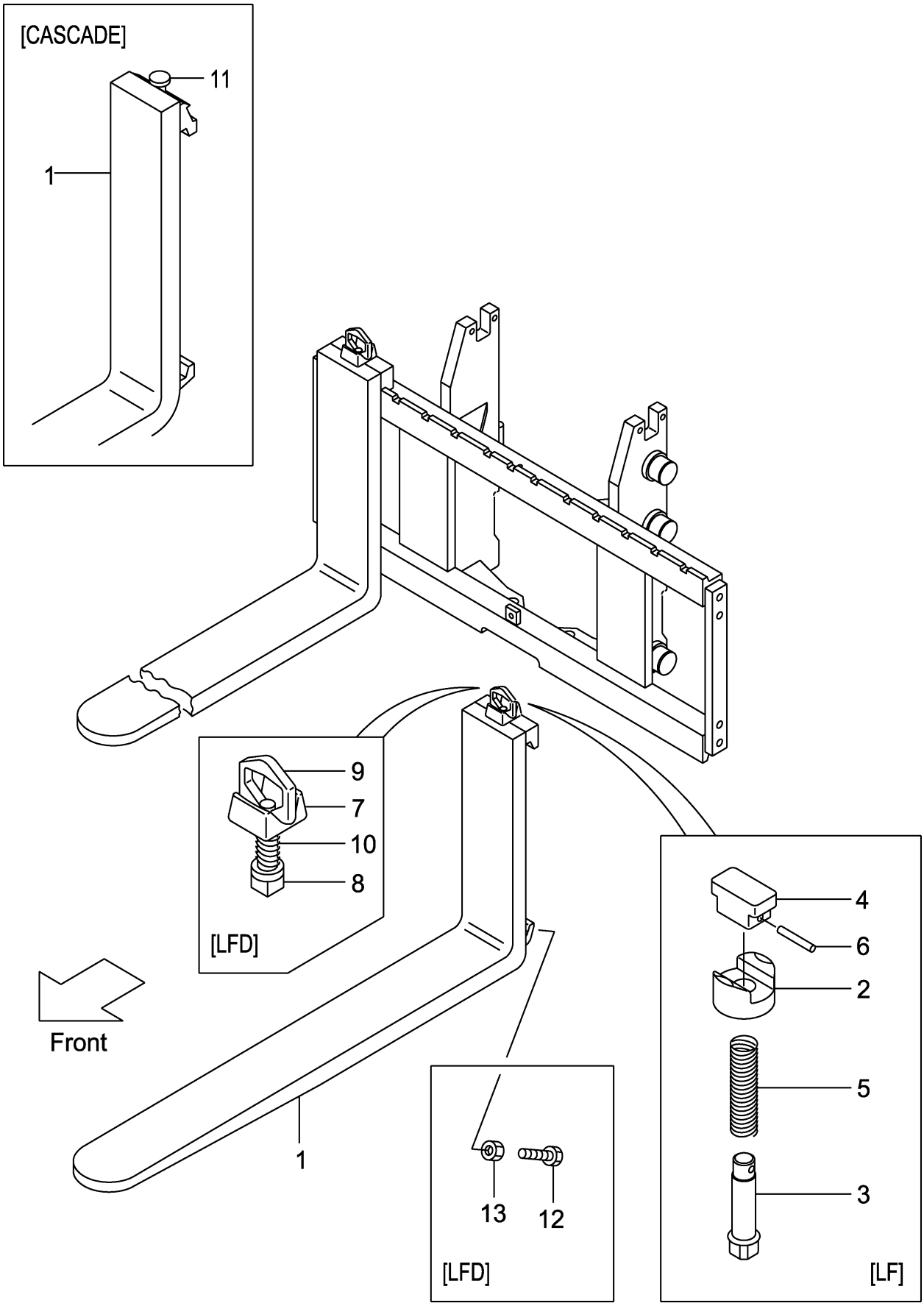

A:VFM2N5(2T)
B:VFM2N5(2.5T)

Item No	Part No.	Mark	Description		Req'd	Remarks : Serial No.
-	22N58-10511		FORK	ﾌｫｰｸ	2	[LF107/CASCADE] INC.11
-	22N58-10521		FORK	ﾌｫｰｸ	2	[LF122/CASCADE] INC.11
2	216G8-12921		HOLDER	ﾎﾙﾀﾞ	2	[LF]
3	231A8-12001		PIN	ﾋﾟﾝ	2	[LF]
4	231A8-12011		KNOB	ﾉﾌﾞ	2	[LF]
5	231A8-12021		SPRING	ｽﾌﾟﾘﾝｸﾞ	2	[LF]
6	231A8-12031		PIN,SPRING	ﾋﾟﾝ	2	[LF]
A1	214A8-11001		STOPPER-ASSY,FORK	ﾌｫｰｸｽﾄｯﾊﾟｱｯｾﾝ	2	[LFD] INC.7-10
7	214A8-12001		HEAD	ﾍｯﾄﾞ	2	[LFD]
8	214A8-12011		STOPPER	ｽﾄｯﾊﾟ	2	[LFD]
9	214A8-12021		HANDLE	ﾊﾝﾄﾞﾙ	2	[LFD]
10	214A8-12031		SPRING	ｽﾌﾟﾘﾝｸﾞ	2	[LFD]
11	W-K2PK-M		KIT,PIN,STOPPER	ｽﾄｯﾊﾟﾋﾟﾝｷｯﾄ	2	[CASCADE]
12	216G8-12101		BOLT	ﾎﾞﾙﾄ	4	[LFD]
13	01402-00010		NUT	ﾅｯﾄ	4	[LFD]

FIG.182 LIFT BRACKET [VFM2N5]

(M7020610) ﾘﾌﾄﾌﾞﾗｹｯﾄ

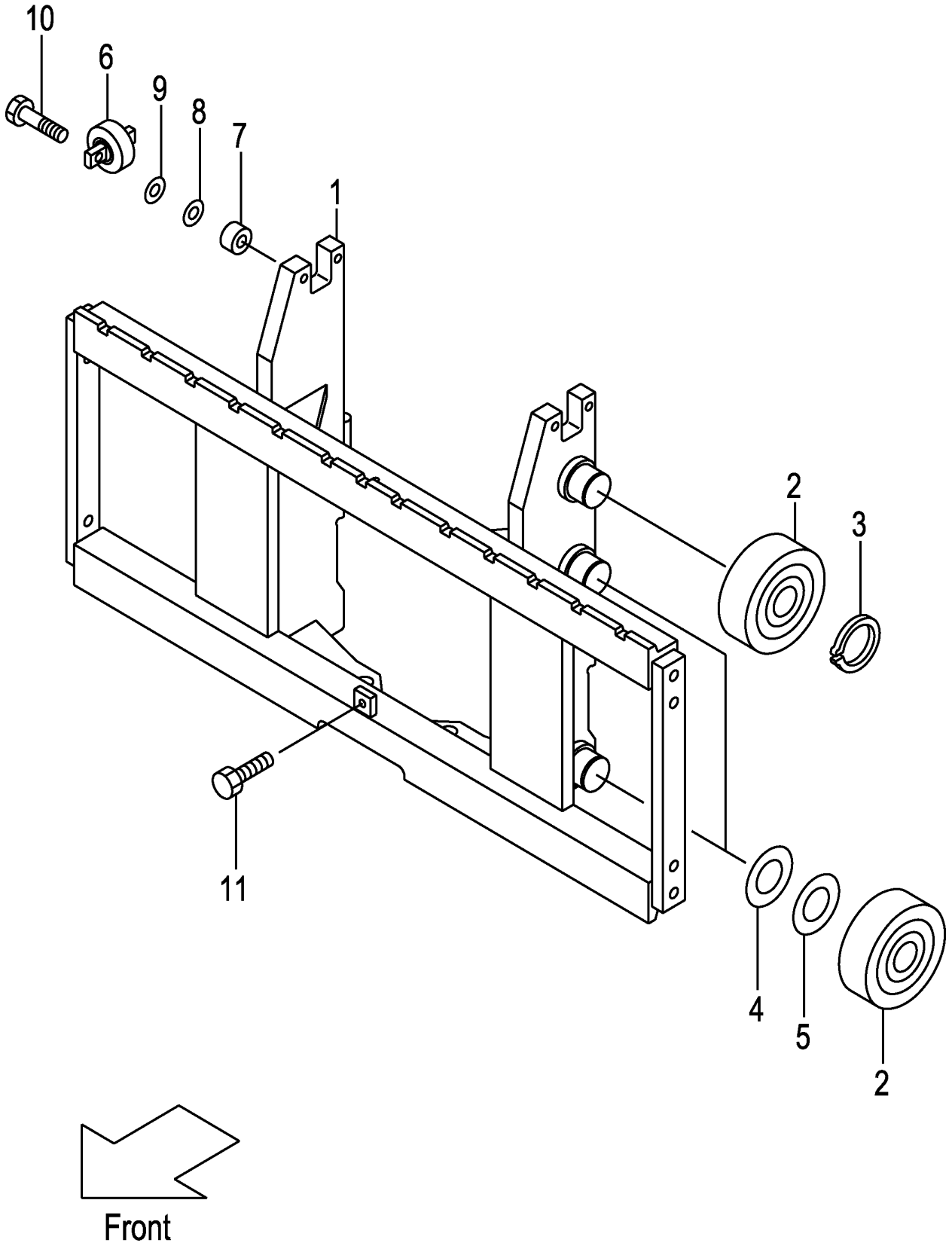

A:VFM2N5(2T)
B:VFM2N5(2.5T)

Item No	Part No.	Mark	Description		Req'd	Remarks : Serial No.
1	22N50-60201		BRACKET,LIFT	ﾌﾞﾗｹｯﾄ	1	
-	52N51-61201		BRACKET,LIFT	ﾌﾞﾗｹｯﾄ	1	[WFX110][WFX114][WFX127] [WFX135][WFX138]
-	52N51-61211		BRACKET,LIFT	ﾌﾞﾗｹｯﾄ	1	[WFX135][WFX138][WFX145] [WFX146][WFX154][WFX180]
2	277P8-22051		ROLLER,END,119.0	ﾛｰﾗ	6	
-	577P3-74001		ROLLER,END,119.0	ﾛｰﾗ	6	[FC][CS35][FCS35][FCS45] [FCS55]
-	277P8-22061		ROLLER,END,119.5	ﾛｰﾗ	(6)	
-	577P3-74011		ROLLER,END,119.5	ﾛｰﾗ	(6)	[FC][CS35][FCS35][FCS45] [FCS55]
3	02100-00045		RING,SNAP	ﾘﾝｸﾞ	2	
4	277P8-22071		SHIM,T-0.5	ｼﾑ	5	
5	277P8-22081		SHIM,T-1.0	ｼﾑ	5	
6	22N58-32701		ROLLER,SIDE,42.0	ﾛｰﾗ	2	
-	52N53-74001		ROLLER,SIDE,42.0	ﾛｰﾗ	2	[FC][CS35][FCS35][FCS45] [FCS55]
7	22N58-32711		SPACER	ｽﾍﾟｰｻ	4	
8	22018-30261		SHIM,T-0.2	ｼﾑ	8	
9	22018-30121		SHIM,T-1.0	ｼﾑ	4	
10	01103-10045		BOLT	ﾎﾞﾙﾄ	4	
11	01184-12025		BOLT	ﾎﾞﾙﾄ	1	

FIG.183 BACKREST [VFM2N5]

(M7028250) ﾊﾞｯｸﾚｽﾄ

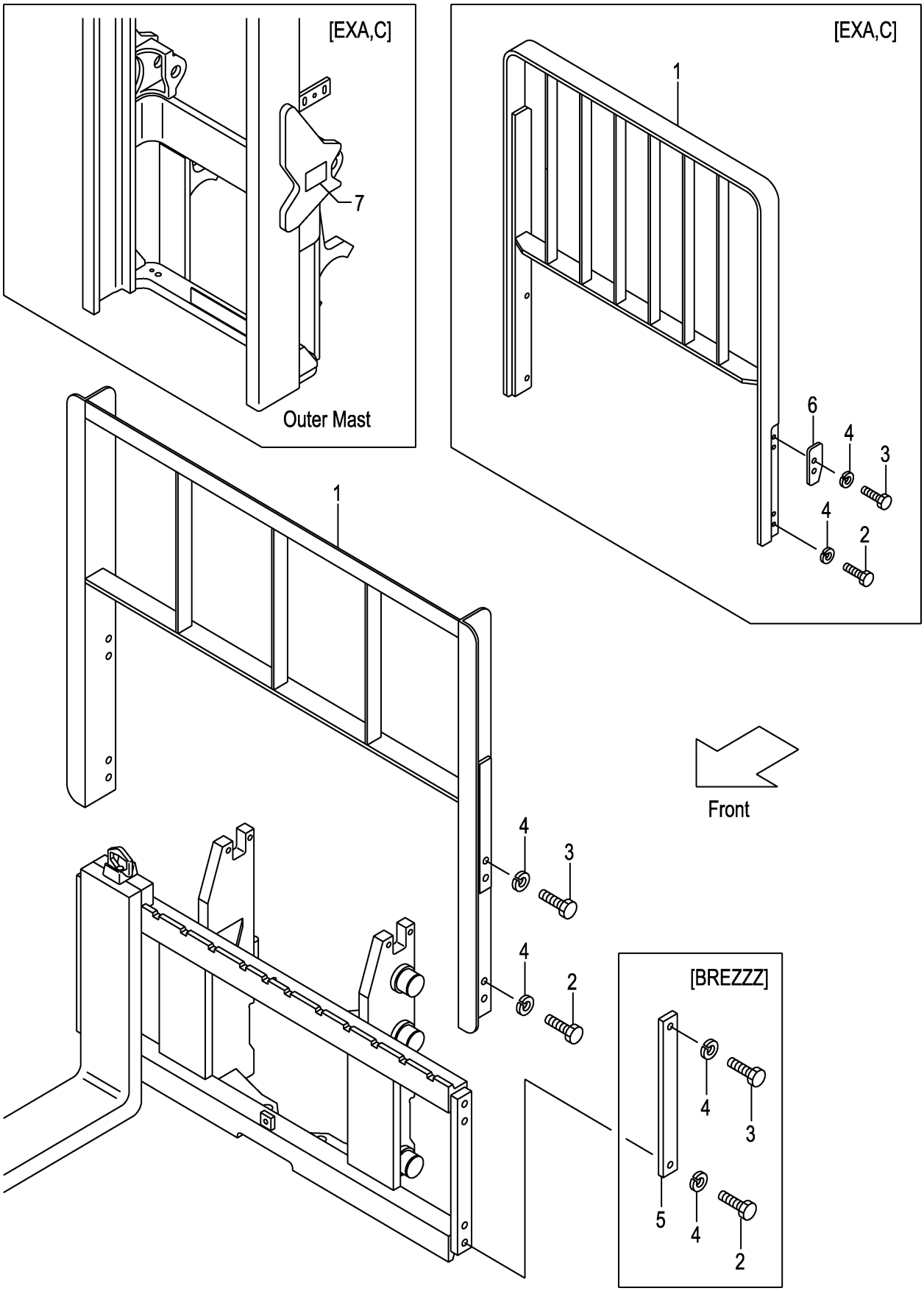

A:VFM2N5(2T)
B:VFM2N5(2.5T)

Item No	Part No.	Mark	Description		Req'd	Remarks : Serial No.
1	234A8-22202		BACKREST	ﾊﾞｯｸﾚｽﾄ	1	
-	239A8-20101		BACKREST	ﾊﾞｯｸﾚｽﾄ	1	[HBR110]
-	239A8-20111		BACKREST	ﾊﾞｯｸﾚｽﾄ	1	[HBR120]
-	239A8-20121		BACKREST	ﾊﾞｯｸﾚｽﾄ	1	[HBR130]
-	239A8-20131		BACKREST	ﾊﾞｯｸﾚｽﾄ	1	[HBR140]
-	239A8-20141		BACKREST	ﾊﾞｯｸﾚｽﾄ	1	[HBR150]
-	534A1-64402		BACKREST	ﾊﾞｯｸﾚｽﾄ	1	[WFX135]
-	534A1-64412		BACKREST	ﾊﾞｯｸﾚｽﾄ	1	[WFX146]
-	534A2-74001		BACKREST	ﾊﾞｯｸﾚｽﾄ	1	[EXA][EXC]
-	534A2-74101		BACKREST	ﾊﾞｯｸﾚｽﾄ	1	[EXA/WFX135][EXC/WFX135]
-	534A2-74201		BACKREST	ﾊﾞｯｸﾚｽﾄ	1	[EXA/WFX146][EXC/WFX146]
2	01100-14025		BOLT	ﾎﾞﾙﾄ	4	
-	01100-14025		BOLT	ﾎﾞﾙﾄ	4	[EXA][EXC]
-	01100-14030		BOLT	ﾎﾞﾙﾄ	4	[HBR]
-	01100-14025		BOLT	ﾎﾞﾙﾄ	2	[BREZZZ]
3	01100-14030		BOLT	ﾎﾞﾙﾄ	4	
-	01100-14035		BOLT	ﾎﾞﾙﾄ	4	[EXA][EXC]
-	01100-14030		BOLT	ﾎﾞﾙﾄ	4	[HBR]
-	01100-14025		BOLT	ﾎﾞﾙﾄ	2	[BREZZZ]
4	02010-00014		WASHER	ﾜｯｼｬ	8	
-	02010-00014		WASHER	ﾜｯｼｬ	4	[BREZZZ]
5	23659-42161		PLATE,SIDE	ﾌﾟﾚｰﾄ	2	[BREZZZ]
6	534A2-74051		PLATE,STOPPER	ﾌﾟﾚｰﾄ	2	[EXA][EXC]
7	534A2-74301		DECAL,CAUTION	ﾃﾞｶﾙ	1	[EXA][EXC]

FIG.184 MAST [VFM2N5]

(M7020410) マスト

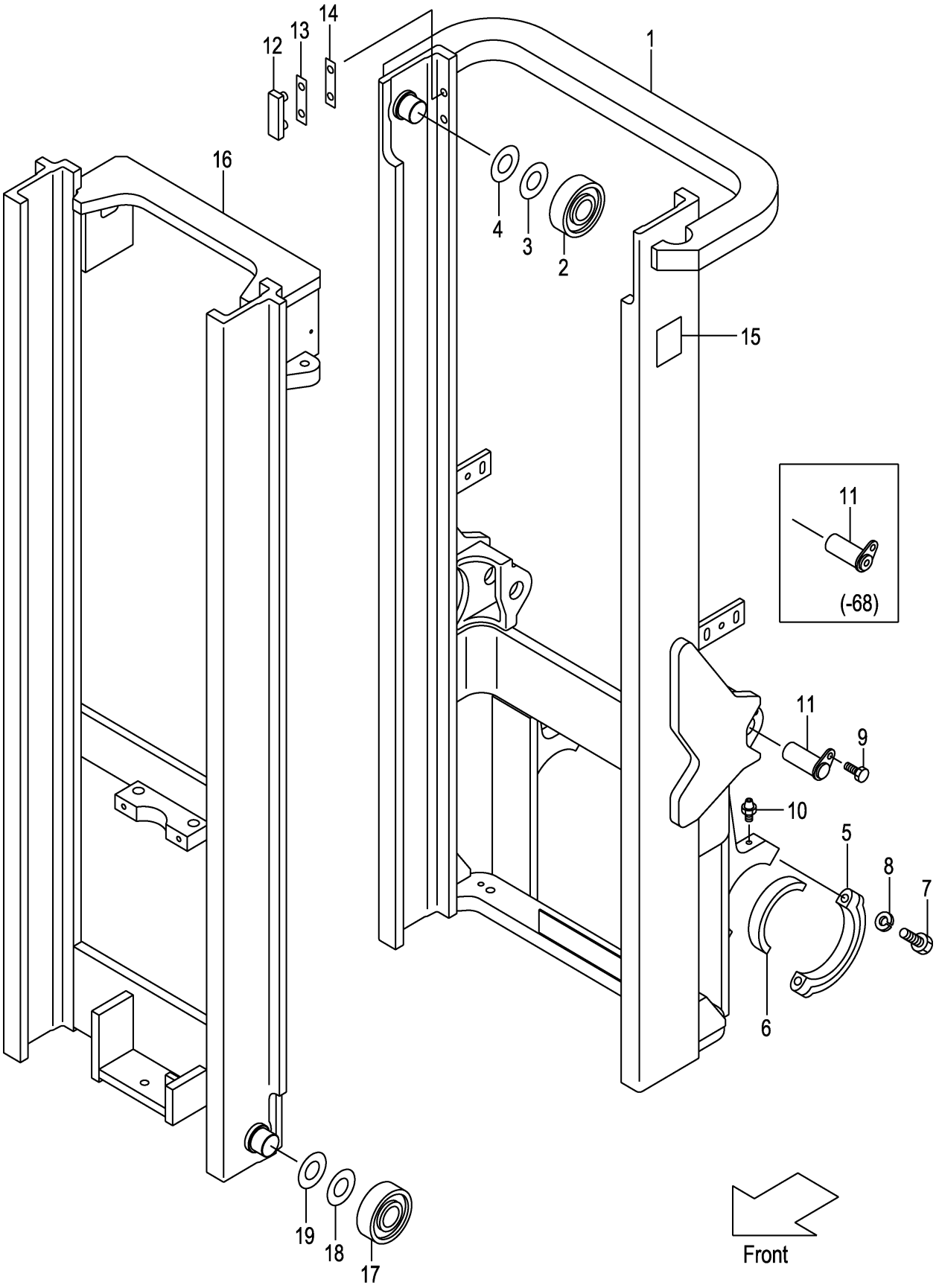

A:VFM2N5(2T)
B:VFM2N5(2.5T)

Item No	Part No.	Mark	Description	Req'd	Remarks : Serial No.
1	22N50-40211		MAST,OUTER VFM200 ｱｳﾀﾏｽﾄ	1	MAST NO.1-43
-	22N50-40212		MAST,OUTER VFM200 ｱｳﾀﾏｽﾄ	1	MAST NO.44-
-	22N50-40221		MAST,OUTER VFM225 ｱｳﾀﾏｽﾄ	1	MAST NO.1-43
-	22N50-40222		MAST,OUTER VFM225 ｱｳﾀﾏｽﾄ	1	MAST NO.44-
-	22N50-40231		MAST,OUTER VFM250 ｱｳﾀﾏｽﾄ	1	MAST NO.1-43
-	22N50-40232		MAST,OUTER VFM250 ｱｳﾀﾏｽﾄ	1	MAST NO.44-
-	22N50-40241		MAST,OUTER VFM270 ｱｳﾀﾏｽﾄ	1	MAST NO.1-43
-	22N50-40242		MAST,OUTER VFM270 ｱｳﾀﾏｽﾄ	1	MAST NO.44-
-	22N50-40251		MAST,OUTER VFM275 ｱｳﾀﾏｽﾄ	1	MAST NO.1-43
-	22N50-40252		MAST,OUTER VFM275 ｱｳﾀﾏｽﾄ	1	MAST NO.44-
-	22N50-40201		MAST,OUTER VFM300 ｱｳﾀﾏｽﾄ	1	MAST NO.1-43
-	22N50-40202		MAST,OUTER VFM300 ｱｳﾀﾏｽﾄ	1	MAST NO.44-
-	22N50-40261		MAST,OUTER VFM325 ｱｳﾀﾏｽﾄ	1	MAST NO.1-43
-	22N50-40262		MAST,OUTER VFM325 ｱｳﾀﾏｽﾄ	1	MAST NO.44-
-	22N50-40271		MAST,OUTER VFM330 ｱｳﾀﾏｽﾄ	1	MAST NO.1-43
-	22N50-40272		MAST,OUTER VFM330 ｱｳﾀﾏｽﾄ	1	MAST NO.44-
-	22N50-40281		MAST,OUTER VFM350 ｱｳﾀﾏｽﾄ	1	MAST NO.1-43
-	22N50-40282		MAST,OUTER VFM350 ｱｳﾀﾏｽﾄ	1	MAST NO.44-
-	22N50-40291		MAST,OUTER VFM366 ｱｳﾀﾏｽﾄ	1	MAST NO.1-43
-	22N50-40292		MAST,OUTER VFM366 ｱｳﾀﾏｽﾄ	1	MAST NO.44-
-	22N50-40301		MAST,OUTER VFM370 ｱｳﾀﾏｽﾄ	1	MAST NO.1-43
-	22N50-40302		MAST,OUTER VFM370 ｱｳﾀﾏｽﾄ	1	MAST NO.44-
-	22N50-40311		MAST,OUTER VFM375 ｱｳﾀﾏｽﾄ	1	MAST NO.1-43
-	22N50-40312		MAST,OUTER VFM375 ｱｳﾀﾏｽﾄ	1	MAST NO.44-
-	22N50-40321		MAST,OUTER VFM400 ｱｳﾀﾏｽﾄ	1	MAST NO.1-43
-	22N50-40322		MAST,OUTER VFM400 ｱｳﾀﾏｽﾄ	1	MAST NO.44-
-	22N50-40331		MAST,OUTER VFM425 ｱｳﾀﾏｽﾄ	1	MAST NO.1-43
-	22N50-40332		MAST,OUTER VFM425 ｱｳﾀﾏｽﾄ	1	MAST NO.44-
-	22N50-40341		MAST,OUTER VFM450 ｱｳﾀﾏｽﾄ	1	MAST NO.1-43
-	22N50-40342		MAST,OUTER VFM450 ｱｳﾀﾏｽﾄ	1	MAST NO.44-
-	22N50-40351		MAST,OUTER VFM475 ｱｳﾀﾏｽﾄ	1	MAST NO.1-43
-	22N50-40352		MAST,OUTER VFM475 ｱｳﾀﾏｽﾄ	1	MAST NO.44-
-	22N50-40361		MAST,OUTER VFM500 ｱｳﾀﾏｽﾄ	1	MAST NO.1-43
-	22N50-40362		MAST,OUTER VFM500 ｱｳﾀﾏｽﾄ	1	MAST NO.44-
-	22N50-40371		MAST,OUTER VFM550 ｱｳﾀﾏｽﾄ	1	MAST NO.1-43
-	22N50-40372		MAST,OUTER VFM550 ｱｳﾀﾏｽﾄ	1	MAST NO.44-
-	22N50-40381		MAST,OUTER VFM600 ｱｳﾀﾏｽﾄ	1	MAST NO.1-43
-	22N50-40382		MAST,OUTER VFM600 ｱｳﾀﾏｽﾄ	1	MAST NO.44-
-	52N53-91211		MAST,OUTER VFM200 ｱｳﾀﾏｽﾄ	1	MAST NO.1-43 [EXR][RW]
-	52N53-91212		MAST,OUTER VFM200 ｱｳﾀﾏｽﾄ	1	MAST NO.44- [EXR][RW]
-	52N53-91221		MAST,OUTER VFM225 ｱｳﾀﾏｽﾄ	1	MAST NO.1-43 [EXR][RW]
-	52N53-91222		MAST,OUTER VFM225 ｱｳﾀﾏｽﾄ	1	MAST NO.44- [EXR][RW]
-	52N53-91231		MAST,OUTER VFM250 ｱｳﾀﾏｽﾄ	1	MAST NO.1-43 [EXR][RW]
-	52N53-91232		MAST,OUTER VFM250 ｱｳﾀﾏｽﾄ	1	MAST NO.44- [EXR][RW]

FIG.184 MAST [VFM2N5]

(M7020410) マスト

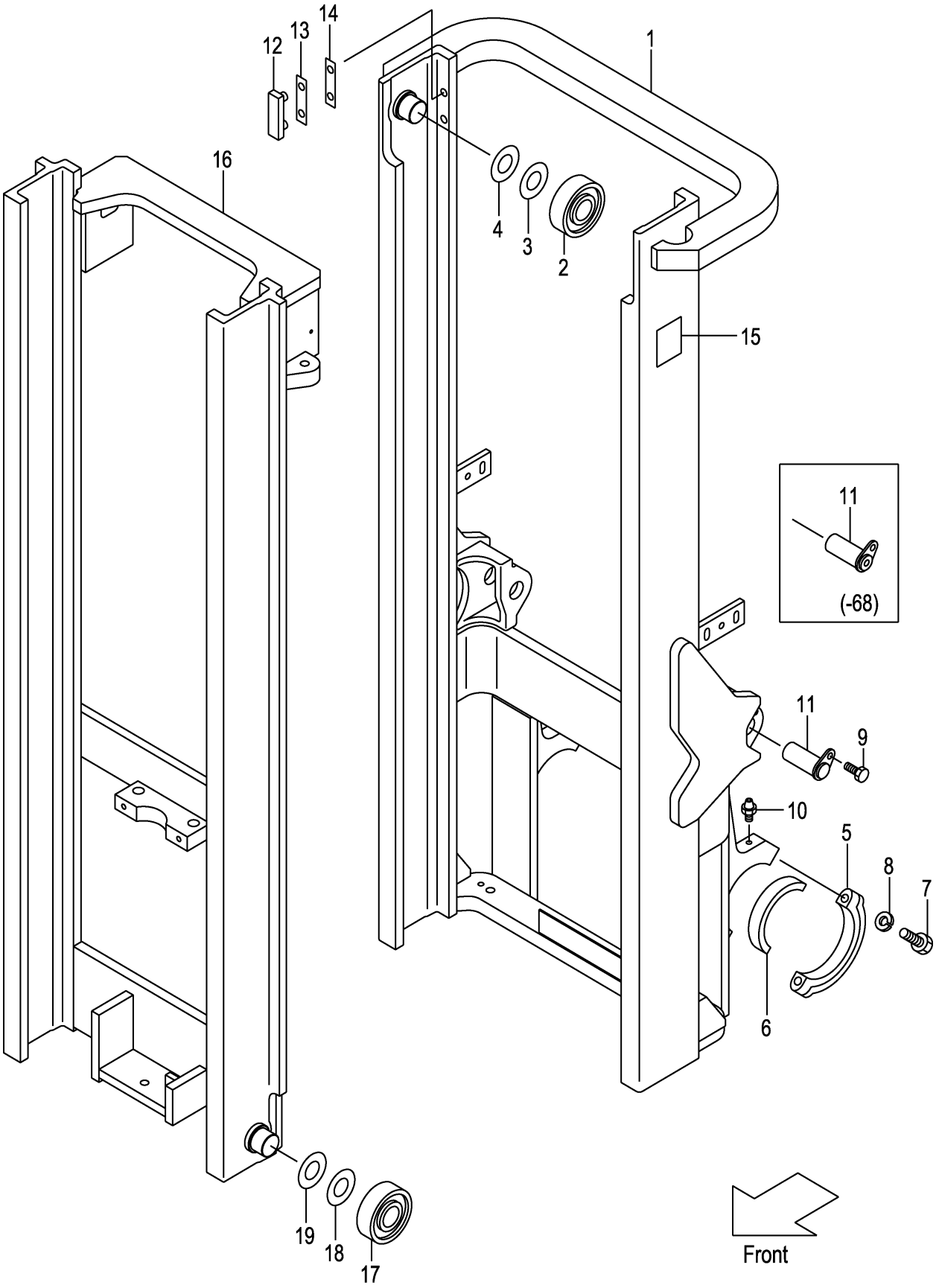

A:VFM2N5(2T)
B:VFM2N5(2.5T)

Item No	Part No.	Mark	Description	Req'd	Remarks : Serial No.
-	52N53-91241		MAST,OUTER VFM270 ｱｳﾀﾏｽﾄ	1	MAST NO.1-43 [EXR][RW]
-	52N53-91242		MAST,OUTER VFM270 ｱｳﾀﾏｽﾄ	1	MAST NO.44- [EXR][RW]
-	52N53-91251		MAST,OUTER VFM275 ｱｳﾀﾏｽﾄ	1	MAST NO.1-43 [EXR][RW]
-	52N53-91252		MAST,OUTER VFM275 ｱｳﾀﾏｽﾄ	1	MAST NO.44- [EXR][RW]
-	52N53-91201		MAST,OUTER VFM300 ｱｳﾀﾏｽﾄ	1	MAST NO.1-43 [EXR][RW]
-	52N53-91202		MAST,OUTER VFM300 ｱｳﾀﾏｽﾄ	1	MAST NO.44- [EXR][RW]
-	52N53-91261		MAST,OUTER VFM325 ｱｳﾀﾏｽﾄ	1	MAST NO.1-43 [EXR][RW]
-	52N53-91262		MAST,OUTER VFM325 ｱｳﾀﾏｽﾄ	1	MAST NO.44- [EXR][RW]
-	52N53-91271		MAST,OUTER VFM330 ｱｳﾀﾏｽﾄ	1	MAST NO.1-43 [EXR][RW]
-	52N53-91272		MAST,OUTER VFM330 ｱｳﾀﾏｽﾄ	1	MAST NO.44- [EXR][RW]
-	52N53-91281		MAST,OUTER VFM350 ｱｳﾀﾏｽﾄ	1	MAST NO.1-43 [EXR][RW]
-	52N53-91282		MAST,OUTER VFM350 ｱｳﾀﾏｽﾄ	1	MAST NO.44- [EXR][RW]
-	52N53-91291		MAST,OUTER VFM366 ｱｳﾀﾏｽﾄ	1	MAST NO.1-43 [EXR][RW]
-	52N53-91292		MAST,OUTER VFM366 ｱｳﾀﾏｽﾄ	1	MAST NO.44- [EXR][RW]
-	52N53-91301		MAST,OUTER VFM370 ｱｳﾀﾏｽﾄ	1	MAST NO.1-43 [EXR][RW]
-	52N53-91302		MAST,OUTER VFM370 ｱｳﾀﾏｽﾄ	1	MAST NO.44- [EXR][RW]
-	52N53-91311		MAST,OUTER VFM375 ｱｳﾀﾏｽﾄ	1	MAST NO.1-43 [EXR][RW]
-	52N53-91312		MAST,OUTER VFM375 ｱｳﾀﾏｽﾄ	1	MAST NO.44- [EXR][RW]
-	52N53-91321		MAST,OUTER VFM400 ｱｳﾀﾏｽﾄ	1	MAST NO.1-43 [EXR][RW]
-	52N53-91322		MAST,OUTER VFM400 ｱｳﾀﾏｽﾄ	1	MAST NO.44- [EXR][RW]
-	52N53-91331		MAST,OUTER VFM425 ｱｳﾀﾏｽﾄ	1	MAST NO.1-43 [EXR][RW]
-	52N53-91332		MAST,OUTER VFM425 ｱｳﾀﾏｽﾄ	1	MAST NO.44- [EXR][RW]
-	52N53-91341		MAST,OUTER VFM450 ｱｳﾀﾏｽﾄ	1	MAST NO.1-43 [EXR][RW]
-	52N53-91342		MAST,OUTER VFM450 ｱｳﾀﾏｽﾄ	1	MAST NO.44- [EXR][RW]
-	52N53-91351		MAST,OUTER VFM475 ｱｳﾀﾏｽﾄ	1	MAST NO.1-43 [EXR][RW]

FIG.184 MAST [VFM2N5]

(M7020410) マスト

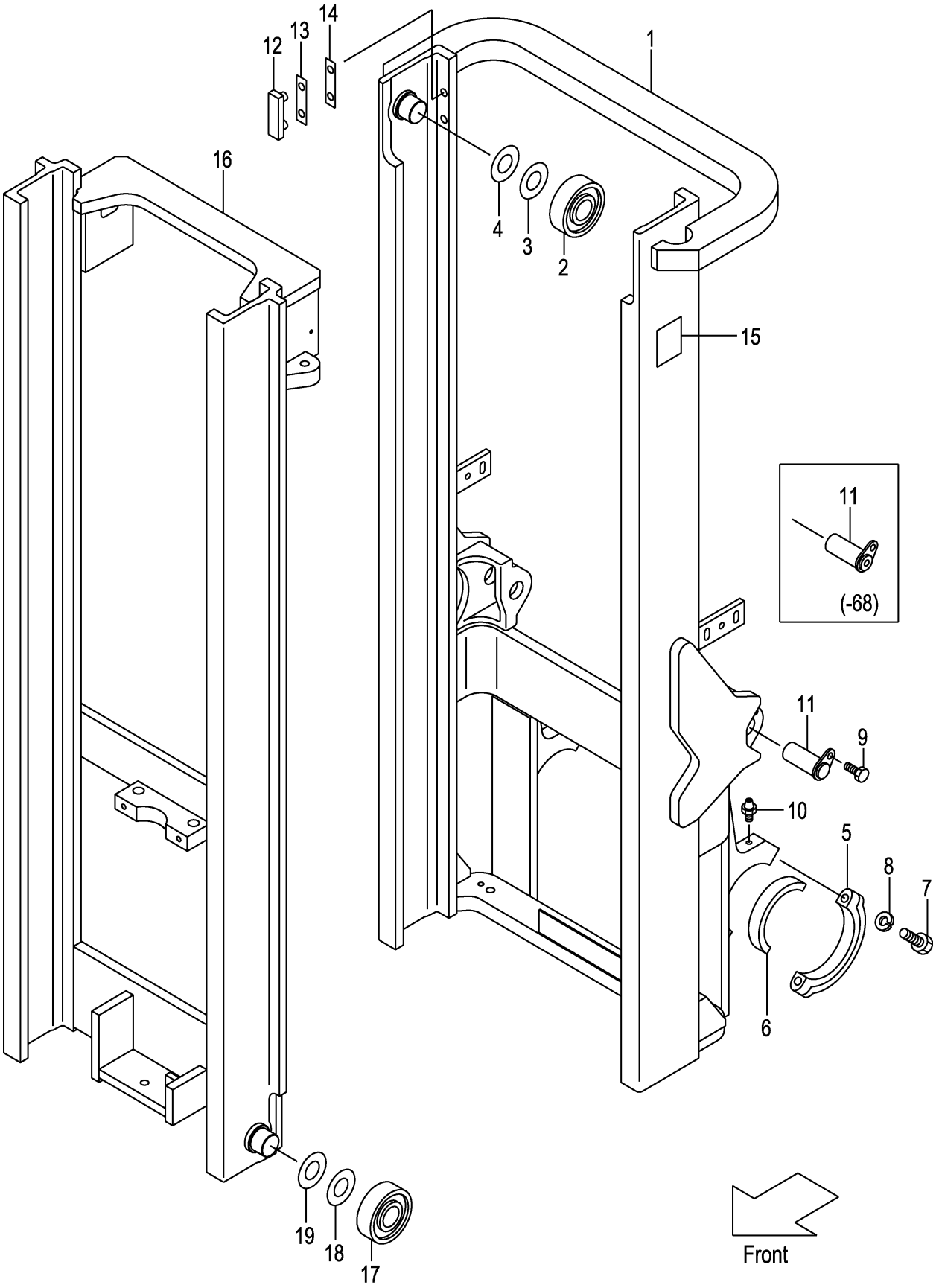

A:VFM2N5(2T)
B:VFM2N5(2.5T)

Item No	Part No.	Mark	Description		Req'd	Remarks : Serial No.
-	52N53-91352		MAST,OUTER VFM475	ｱｳﾀﾏｽﾄ	1	MAST NO.44- [EXR][RW]
-	52N53-91361		MAST,OUTER VFM500	ｱｳﾀﾏｽﾄ	1	MAST NO.1-43 [EXR][RW]
-	52N53-91362		MAST,OUTER VFM500	ｱｳﾀﾏｽﾄ	1	MAST NO.44- [EXR][RW]
-	52N53-91371		MAST,OUTER VFM550	ｱｳﾀﾏｽﾄ	1	MAST NO.1-43 [EXR][RW]
-	52N53-91372		MAST,OUTER VFM550	ｱｳﾀﾏｽﾄ	1	MAST NO.44- [EXR][RW]
-	52N53-91381		MAST,OUTER VFM600	ｱｳﾀﾏｽﾄ	1	MAST NO.1-43 [EXR][RW]
-	52N53-91382		MAST,OUTER VFM600	ｱｳﾀﾏｽﾄ	1	MAST NO.44- [EXR][RW]
2	277P8-22051		ROLLER,END,119.0	ﾛｰﾗ	2	
-	577P3-74001		ROLLER,END,119.0	ﾛｰﾗ	2	[FC][CS35][FCS35][FCS45] [FCS55]
3	277P8-22071		SHIM,T-0.5	ｼﾑ	12	
4	277P8-22081		SHIM,T-1.0	ｼﾑ	12	
5	277P8-32701		CAP	ｷｬｯﾌﾟ	2	
6	214A8-02201		BUSHING	ﾌﾞｯｼﾝｸﾞ	2	
7	01103-16065		BOLT	ﾎﾞﾙﾄ	4	
8	02011-00016		WASHER	ﾜｯｼｬ	4	
9	216G8-52301		BOLT & WASHER	ﾎﾞﾙﾄ&ﾜｯｼｬ	2	
10	04901-00100		FITTING	ﾌｨｯﾃｨﾝｸﾞ	2	
11	272K8-52201		PIN	ﾋﾟﾝ	2	MAST NO.1-68
-	22N58-52501		PIN	ﾋﾟﾝ	2	MAST NO.69-
12	216G8-33401		SLIPPER	ｽﾘｯﾊﾟ	2	
13	216G8-33361		SHIM,T-0.5	ｼﾑ	8	
14	216G8-33371		SHIM,T-1.0	ｼﾑ	4	
15	23678-06002		PLATE,NAME	ﾌﾟﾚｰﾄ	1	
16	22N50-40411		MAST,INNER VFM200	ｲﾝﾅﾏｽﾄ	1	
-	22N50-40421		MAST,INNER VFM225	ｲﾝﾅﾏｽﾄ	1	
-	22N50-40431		MAST,INNER VFM250	ｲﾝﾅﾏｽﾄ	1	
-	22N50-40441		MAST,INNER VFM270	ｲﾝﾅﾏｽﾄ	1	
-	22N50-40451		MAST,INNER VFM275	ｲﾝﾅﾏｽﾄ	1	
-	22N50-40401		MAST,INNER VFM300	ｲﾝﾅﾏｽﾄ	1	
-	22N50-40461		MAST,INNER VFM325	ｲﾝﾅﾏｽﾄ	1	
-	22N50-40471		MAST,INNER VFM330	ｲﾝﾅﾏｽﾄ	1	
-	22N50-40481		MAST,INNER VFM350	ｲﾝﾅﾏｽﾄ	1	
-	22N50-40491		MAST,INNER VFM366	ｲﾝﾅﾏｽﾄ	1	
-	22N50-40501		MAST,INNER VFM370	ｲﾝﾅﾏｽﾄ	1	
-	22N50-40511		MAST,INNER VFM375	ｲﾝﾅﾏｽﾄ	1	
-	22N50-40521		MAST,INNER VFM400	ｲﾝﾅﾏｽﾄ	1	
-	22N50-40531		MAST,INNER VFM425	ｲﾝﾅﾏｽﾄ	1	
-	22N50-40541		MAST,INNER VFM450	ｲﾝﾅﾏｽﾄ	1	
-	22N50-40551		MAST,INNER VFM475	ｲﾝﾅﾏｽﾄ	1	
-	22N50-40561		MAST,INNER VFM500	ｲﾝﾅﾏｽﾄ	1	
-	22N50-40571		MAST,INNER VFM550	ｲﾝﾅﾏｽﾄ	1	
-	22N50-40581		MAST,INNER VFM600	ｲﾝﾅﾏｽﾄ	1	

FIG.184 MAST [VFM2N5]

(M7020410) マスト

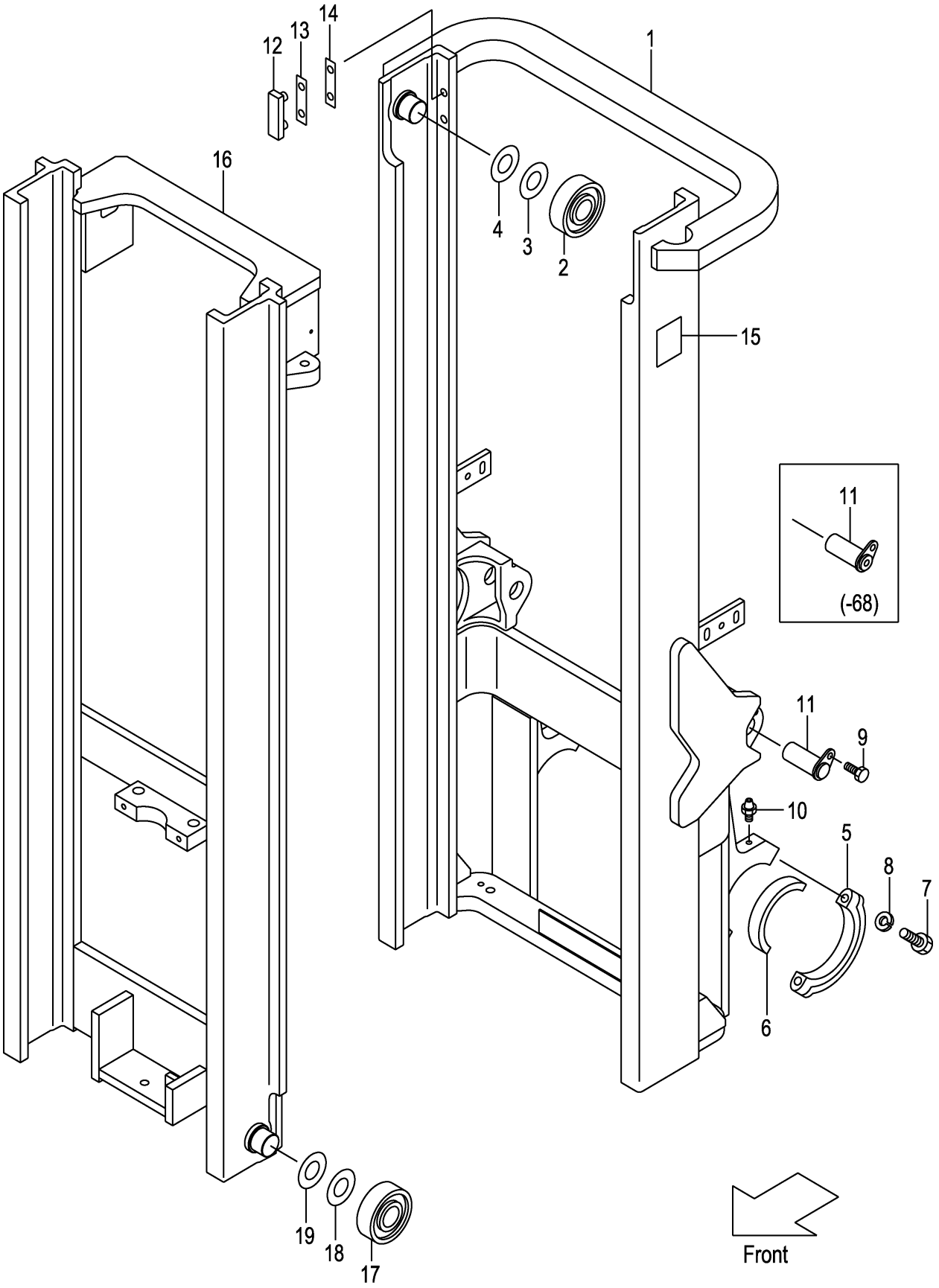

A:VFM2N5(2T)
B:VFM2N5(2.5T)

Item No	Part No.	Mark	Description	Req'd	Remarks : Serial No.
17	277P8-22051		ROLLER,END,119.0 ﾛｰﾗ	2	
-	577P3-74001		ROLLER,END,119.0 ﾛｰﾗ	2	[FC][CS35][FCS35][FCS45] [FCS55]
-	277P8-22061		ROLLER,END,119.5 ﾛｰﾗ	(2)	
-	577P3-74011		ROLLER,END,119.5 ﾛｰﾗ	(2)	[FC][CS35][FCS35][FCS45] [FCS55]
18	277P8-22071		SHIM,T-0.5 ｼﾑ	12	
19	277P8-22081		SHIM,T-1.0 ｼﾑ	12	

FIG.185 TILT GAUGE [VFM2N5/(TG,PPC,PR,PRC,MPC)]

(M7020420) ﾃｨﾙﾄｹﾞｰｼﾞ

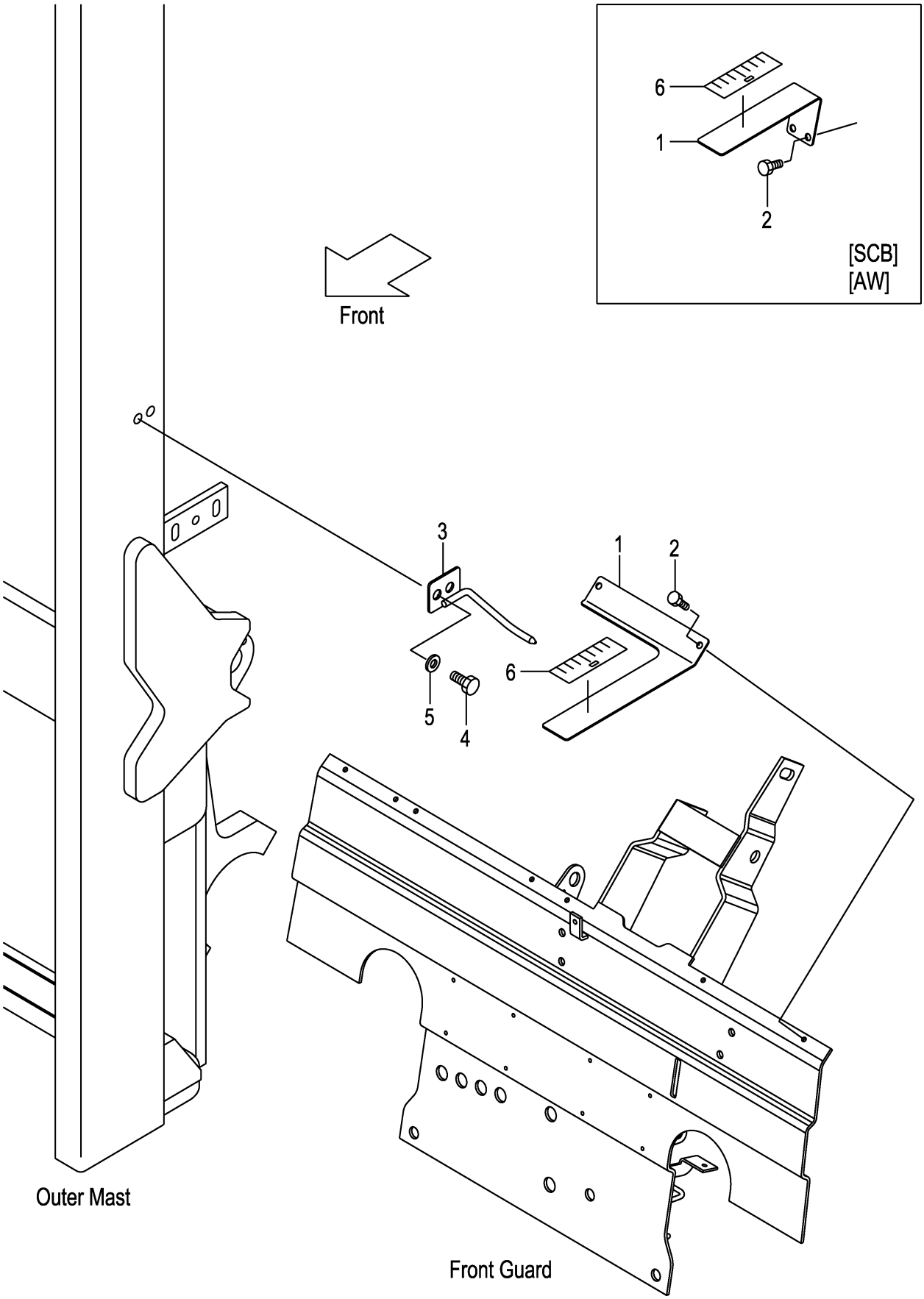

A:VFM2N5(2T)
B:VFM2N5(2.5T)

Item No	Part No.	Mark	Description		Req'd	Remarks : Serial No.
1	62A89-21811		GAUGE,TILT	ｹﾞｰｼﾞ	1	[(TG,PPC,PR,PRC,MPC) /VFM250-600]
-	62A89-21831		GAUGE,TILT	ｹﾞｰｼﾞ	1	[SCB/(TG,PPC,PR,PRC,MPC) /VFM250-600
-	62A89-21831		GAUGE,TILT	ｹﾞｰｼﾞ	1	[AW/](TG,PPC,PR,PRC,MPC) /VFM250-600]
2	01183-06020		BOLT	ﾎﾞﾙﾄ	2	[(TG,PPC,PR,PRC,MPC) /VFM250-600]
-	01183-06020		BOLT	ﾎﾞﾙﾄ	2	[SCB/(TG,PPC,PR,PRC,MPC) /VFM250-600]
-	01183-06020		BOLT	ﾎﾞﾙﾄ	2	[AW/(TG,PPC,PR,PRC,MPC) /VFM250-600]
3	62A89-21851		INDICATOR	ｲﾝｼﾞｹｰﾀ	1	[(TG,PPC,PR,PRC,MPC) /VFM250-600]
-	62A89-21851		INDICATOR	ｲﾝｼﾞｹｰﾀ	1	[SCB/(TG,PPC,PR,PRC,MPC) /VFM250-600]
-	62A89-21851		INDICATOR	ｲﾝｼﾞｹｰﾀ	1	[AW/(TG,PPC,PR,PRC,MPC) /VFM250-600]
4	01184-12025		BOLT	ﾎﾞﾙﾄ	2	[(TG,PPC,PR,PRC,MPC) /VFM250-600]
-	01184-12025		BOLT	ﾎﾞﾙﾄ	2	[SCB/(TG,PPC,PR,PRC,MPC) /VFM250-600]
-	01184-12025		BOLT	ﾎﾞﾙﾄ	2	[AW/(TG,PPC,PR,PRC,MPC) /VFM250-600]
5	02000-00012		WASHER	ﾜｯｼｬ	2	[(TG,PPC,PR,PRC,MPC) /VFM250-600]
-	02000-00012		WASHER	ﾜｯｼｬ	2	[SCB/(TG,PPC,PR,PRC,MPC) /VFM250-600]
-	02000-00012		WASHER	ﾜｯｼｬ	2	[AW/(TG,PPC,PR,PRC,MPC) /VFM250-600]
6	62459-23371		SEAL,GAUGE	ｼｰﾙ	1	[(TG,PPC,PR,PRC,MPC) /VFM250-600]
-	62459-23371		SEAL,GAUGE	ｼｰﾙ	1	[SCB/(TG,PPC,PR,PRC,MPC) /VFM250-600]
-	62459-23371		SEAL,GAUGE	ｼｰﾙ	1	[AW/(TG,PPC,PR,PRC,MPC) /VFM250-600]

FIG.186 LIFT CYLINDER (FRONT)[VFM2N5]

(M7020510) リフトシリンダ(フロント)

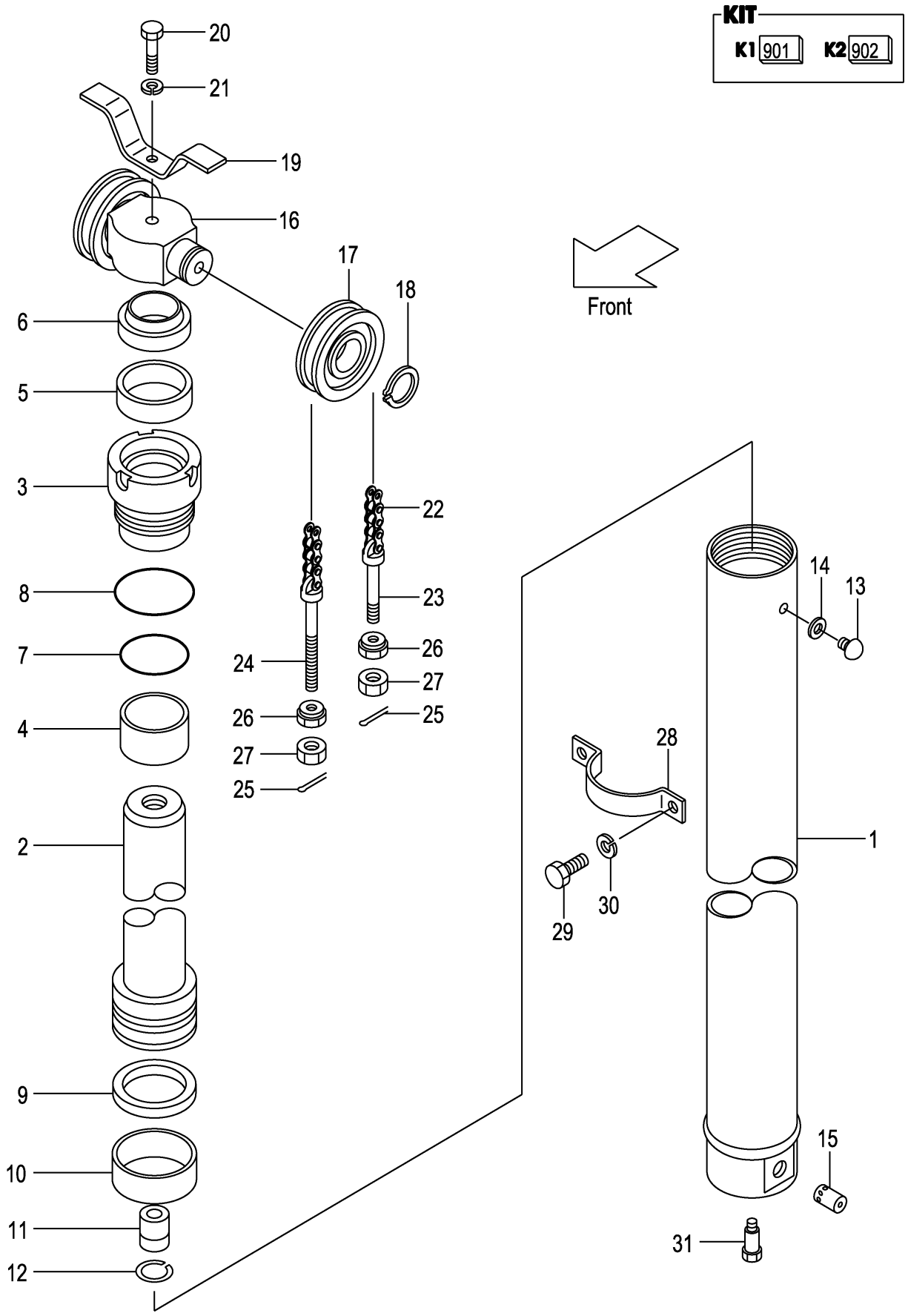

A:VFM2N5(2T)
B:VFM2N5(2.5T)

Item No	Part No.	Mark	Description		Req'd	Remarks : Serial No.
A1	22N50-50511		CYL-ASSY,LIFT VFM200	ﾘﾌﾄｼﾘﾝﾀﾞｱｯｾﾝ	1	INC.1-15
-	22N50-50521		CYL-ASSY,LIFT VFM225	ﾘﾌﾄｼﾘﾝﾀﾞｱｯｾﾝ	1	INC.1-15
-	22N50-50531		CYL-ASSY,LIFT VFM250	ﾘﾌﾄｼﾘﾝﾀﾞｱｯｾﾝ	1	INC.1-15
-	212T0-50511		CYL-ASSY,LIFT VFM270	ﾘﾌﾄｼﾘﾝﾀﾞｱｯｾﾝ	1	INC.1-15
-	212T0-50521		CYL-ASSY,LIFT VFM275	ﾘﾌﾄｼﾘﾝﾀﾞｱｯｾﾝ	1	INC.1-15
-	212T0-50501		CYL-ASSY,LIFT VFM300	ﾘﾌﾄｼﾘﾝﾀﾞｱｯｾﾝ	1	INC.1-15
-	212T0-50531		CYL-ASSY,LIFT VFM325	ﾘﾌﾄｼﾘﾝﾀﾞｱｯｾﾝ	1	INC.1-15
-	212T0-50541		CYL-ASSY,LIFT VFM330	ﾘﾌﾄｼﾘﾝﾀﾞｱｯｾﾝ	1	INC.1-15
-	212T0-50551		CYL-ASSY,LIFT VFM350	ﾘﾌﾄｼﾘﾝﾀﾞｱｯｾﾝ	1	INC.1-15
-	212T0-50561		CYL-ASSY,LIFT VFM366	ﾘﾌﾄｼﾘﾝﾀﾞｱｯｾﾝ	1	INC.1-15
-	212T0-80561		CYL-ASSY,LIFT VFM370	ﾘﾌﾄｼﾘﾝﾀﾞｱｯｾﾝ	1	INC.1-15
-	212T0-50571		CYL-ASSY,LIFT VFM375	ﾘﾌﾄｼﾘﾝﾀﾞｱｯｾﾝ	1	INC.1-15
-	212T0-50581		CYL-ASSY,LIFT VFM400	ﾘﾌﾄｼﾘﾝﾀﾞｱｯｾﾝ	1	INC.1-15
-	212T0-50591		CYL-ASSY,LIFT VFM425	ﾘﾌﾄｼﾘﾝﾀﾞｱｯｾﾝ	1	INC.1-15
-	212T0-50601		CYL-ASSY,LIFT VFM450	ﾘﾌﾄｼﾘﾝﾀﾞｱｯｾﾝ	1	INC.1-15
-	212T0-50611		CYL-ASSY,LIFT VFM475	ﾘﾌﾄｼﾘﾝﾀﾞｱｯｾﾝ	1	INC.1-15
-	212T0-50621		CYL-ASSY,LIFT VFM500	ﾘﾌﾄｼﾘﾝﾀﾞｱｯｾﾝ	1	INC.1-15
-	212T0-50631		CYL-ASSY,LIFT VFM550	ﾘﾌﾄｼﾘﾝﾀﾞｱｯｾﾝ	1	INC.1-15
-	212T0-50641		CYL-ASSY,LIFT VFM600	ﾘﾌﾄｼﾘﾝﾀﾞｱｯｾﾝ	1	INC.1-15
901	B-B675B-00003	K1	KIT,HEAD	ﾍｯﾄﾞｷｯﾄ	1	INC.3,4
902	B-B675A-00006	K2	KIT,REPAIR	ﾘﾍﾟｱｷｯﾄ	1	INC.5-10,14
1	B-B6717-94101		BODY,CYL VFM200	ﾎﾞﾃﾞｨ	1	
-	B-B6717-94201		BODY,CYL VFM225	ﾎﾞﾃﾞｨ	1	
-	B-B6717-94301		BODY,CYL VFM250	ﾎﾞﾃﾞｨ	1	
-	B-B6717-92601		BODY,CYL VFM270	ﾎﾞﾃﾞｨ	1	
-	B-B6717-92701		BODY,CYL VFM275	ﾎﾞﾃﾞｨ	1	
-	B-B6717-92801		BODY,CYL VFM300	ﾎﾞﾃﾞｨ	1	
-	B-B6717-92901		BODY,CYL VFM325	ﾎﾞﾃﾞｨ	1	
-	B-B6717-93001		BODY,CYL VFM330	ﾎﾞﾃﾞｨ	1	
-	B-B6717-93101		BODY,CYL VFM350	ﾎﾞﾃﾞｨ	1	
-	B-B6717-93201		BODY,CYL VFM366	ﾎﾞﾃﾞｨ	1	
-	B-B6717-88201		BODY,CYL VFM370	ﾎﾞﾃﾞｨ	1	
-	B-B6717-93301		BODY,CYL VFM375	ﾎﾞﾃﾞｨ	1	
-	B-B6717-93401		BODY,CYL VFM400	ﾎﾞﾃﾞｨ	1	
-	B-B6717-93501		BODY,CYL VFM425	ﾎﾞﾃﾞｨ	1	
-	B-B6717-93601		BODY,CYL VFM450	ﾎﾞﾃﾞｨ	1	
-	B-B6717-93701		BODY,CYL VFM475	ﾎﾞﾃﾞｨ	1	
-	B-B6717-93801		BODY,CYL VFM500	ﾎﾞﾃﾞｨ	1	
-	B-B6717-93901		BODY,CYL VFM550	ﾎﾞﾃﾞｨ	1	
-	B-B6717-94001		BODY,CYL VFM600	ﾎﾞﾃﾞｨ	1	
2	B-B6717-94102		ROD VFM200	ﾛｯﾄﾞ	1	
-	B-B6717-94202		ROD VFM225	ﾛｯﾄﾞ	1	
-	B-B6717-94302		ROD VFM250	ﾛｯﾄﾞ	1	
-	B-B6717-92602		ROD VFM270	ﾛｯﾄﾞ	1	
-	B-B6717-92702		ROD VFM275	ﾛｯﾄﾞ	1	
-	B-B6717-92802		ROD VFM300	ﾛｯﾄﾞ	1	
-	B-B6717-92902		ROD VFM325	ﾛｯﾄﾞ	1	
-	B-B6717-93002		ROD VFM330	ﾛｯﾄﾞ	1	
-	B-B6717-93102		ROD VFM350	ﾛｯﾄﾞ	1	
-	B-B6717-93202		ROD VFM366	ﾛｯﾄﾞ	1	

FIG.186 LIFT CYLINDER (FRONT)[VFM2N5]

(M7020510) リフトシリンダ(フロント)

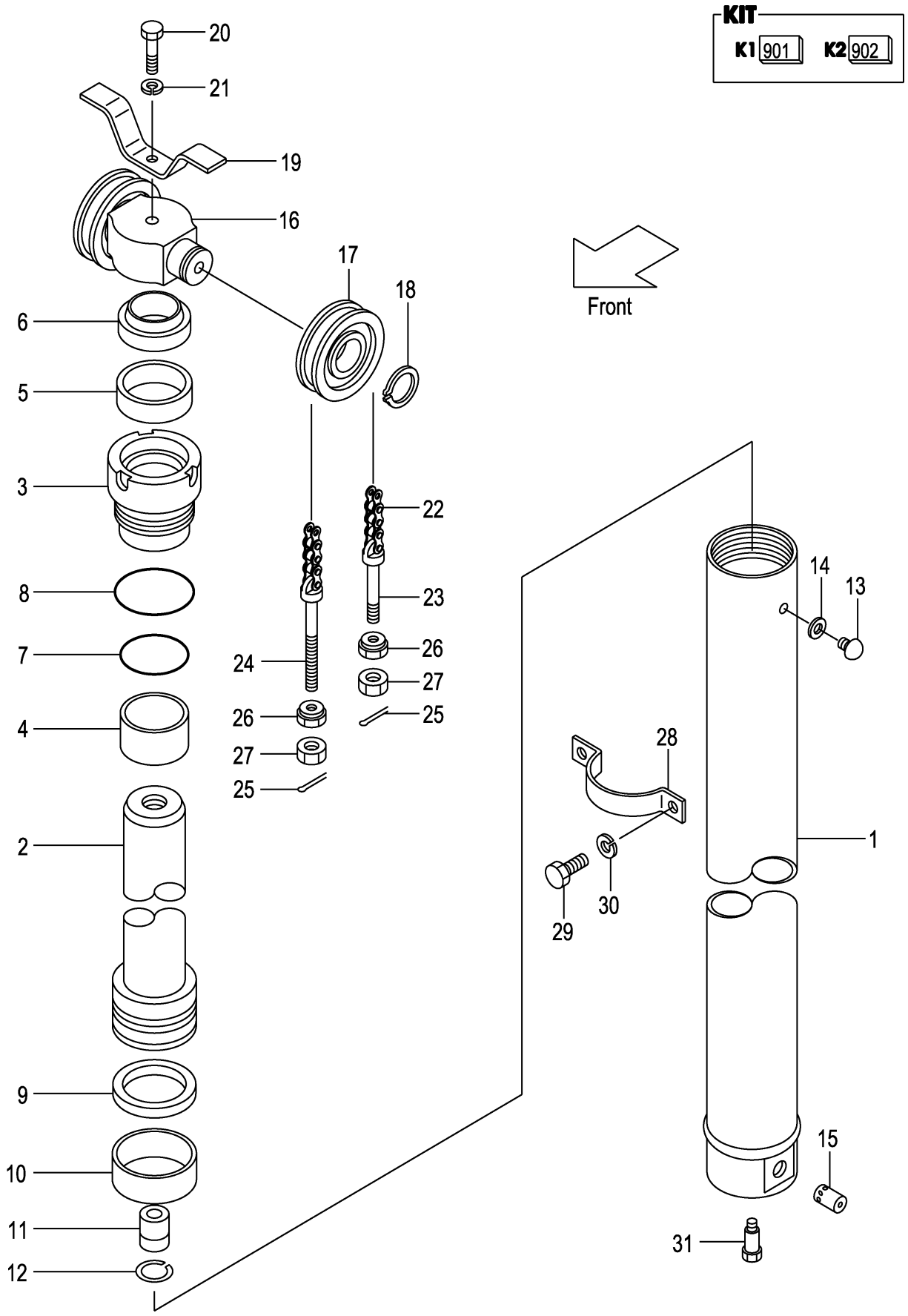

A:VFM2N5(2T)
B:VFM2N5(2.5T)

Item No	Part No.	Mark	Description		Req'd	Remarks : Serial No.
-	B-B6717-88202		ROD VFM370	ﾛｯﾄﾞ	1	
-	B-B6717-93302		ROD VFM375	ﾛｯﾄﾞ	1	
-	B-B6717-93402		ROD VFM400	ﾛｯﾄﾞ	1	
-	B-B6717-93502		ROD VFM425	ﾛｯﾄﾞ	1	
-	B-B6717-93602		ROD VFM450	ﾛｯﾄﾞ	1	
-	B-B6717-93702		ROD VFM475	ﾛｯﾄﾞ	1	
-	B-B6717-93802		ROD VFM500	ﾛｯﾄﾞ	1	
-	B-B6717-93902		ROD VFM550	ﾛｯﾄﾞ	1	
-	B-B6717-94002		ROD VFM600	ﾛｯﾄﾞ	1	
3	B-B6121-75007	*	HEAD	ﾍｯﾄﾞ	1	
4	B-30131-55009	*	BUSHING	ﾌﾞｯｼﾝｸﾞ	1	
5	B-30961-55013	*	U-RING	Uﾘﾝｸﾞ	1	
6	B-30191-55050	*	RING,WIPER	ﾘﾝｸﾞ	1	
7	B-95123-07000	*	O-RING	Oﾘﾝｸﾞ	1	
8	B-95151-07500	*	O-RING	Oﾘﾝｸﾞ	1	
9	B-B6983-75007	*	RING,SEAL	ﾘﾝｸﾞ	1	
10	B-B6181-75007	*	RING,SLIDE	ﾘﾝｸﾞ	1	
11	B-C4300-22001		VALVE,CHECK	ﾊﾞﾙﾌﾞ	1	
12	B-94721-22101		RING,SNAP	ﾘﾝｸﾞ	1	
13	B-B6521-90004		PLUG	ﾌﾟﾗｸﾞ	1	
14	B-B6711-00001	*	GASKET	ｶﾞｽｹｯﾄ	1	
15	B-26570-30115		VALVE	ﾊﾞﾙﾌﾞ	1	
16	212T0-82001		HEAD,PISTON	ﾍｯﾄﾞ	1	
17	234A8-43501		SHEEVE	ｼｰﾌﾞ	2	
-	22208-40031		SHEEVE	ｼｰﾌﾞ	2	[FC][FCS35][FCS45][FCS55]
18	02100-00040		RING,SNAP	ﾘﾝｸﾞ	2	
19	214A0-82681		STOPPER,CHAIN	ｽﾄｯﾊﾟ	1	
20	01100-16070		BOLT	ﾎﾞﾙﾄ	1	
-	01100-16075		BOLT	ﾎﾞﾙﾄ	1	[FC][FCS35][FCS45][FCS55]
21	02010-00016		WASHER	ﾜｯｼｬ	1	
22	22679-45611		CHAIN,LEAF VFM200	ﾁｪｰﾝ	2	
-	22679-45671		CHAIN,LEAF VFM225	ﾁｪｰﾝ	2	
-	22679-45711		CHAIN,LEAF VFM250	ﾁｪｰﾝ	2	
-	22679-45771		CHAIN,LEAF VFM270	ﾁｪｰﾝ	2	
-	22679-45791		CHAIN,LEAF VFM275	ﾁｪｰﾝ	2	
-	22679-45811		CHAIN,LEAF VFM300	ﾁｪｰﾝ	2	
-	22679-45891		CHAIN,LEAF VFM325	ﾁｪｰﾝ	2	
-	22679-45891		CHAIN,LEAF VFM330	ﾁｪｰﾝ	2	
-	22679-45951		CHAIN,LEAF VFM350	ﾁｪｰﾝ	2	
-	22679-45991		CHAIN,LEAF VFM366	ﾁｪｰﾝ	2	
-	22679-46011		CHAIN,LEAF VFM370	ﾁｪｰﾝ	2	
-	22679-46011		CHAIN,LEAF VFM375	ﾁｪｰﾝ	2	
-	22679-46111		CHAIN,LEAF VFM400	ﾁｪｰﾝ	2	
-	22679-46171		CHAIN,LEAF VFM425	ﾁｪｰﾝ	2	
-	22679-46231		CHAIN,LEAF VFM450	ﾁｪｰﾝ	2	
-	22679-46311		CHAIN,LEAF VFM475	ﾁｪｰﾝ	2	
-	22679-46371		CHAIN,LEAF VFM500	ﾁｪｰﾝ	2	
-	22679-46531		CHAIN,LEAF VFM550	ﾁｪｰﾝ	2	
-	22679-46651		CHAIN,LEAF VFM600	ﾁｪｰﾝ	2	
-	09001-10035		CHAIN,ROLLER VFM200	ﾁｪｰﾝ	2	[FC][FCS35][FCS45][FCS55]

FIG.186 LIFT CYLINDER (FRONT)[VFM2N5]

(M7020510) リフトシリンダ(フロント)

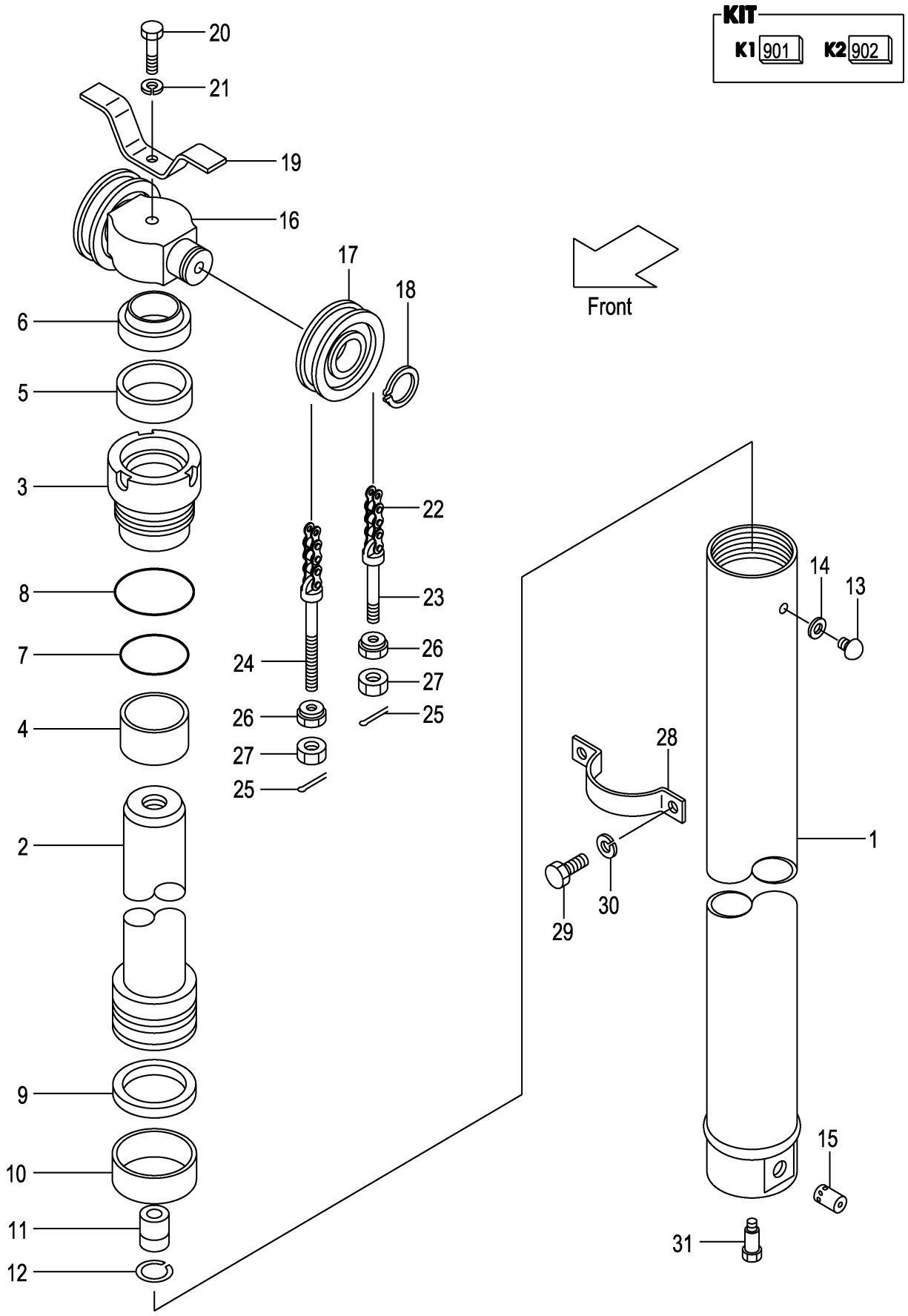

A:VFM2N5(2T)
B:VFM2N5(2.5T)

Item No	Part No.	Mark	Description		Req'd	Remarks : Serial No.
-	09001-10039		CHAIN,ROLLER VFM225	ﾁｪｰﾝ	2	[FC][FCS35][FCS45][FCS55]
-	09001-10041		CHAIN,ROLLER VFM250	ﾁｪｰﾝ	2	[FC][FCS35][FCS45][FCS55]
-	09001-10045		CHAIN,ROLLER VFM270	ﾁｪｰﾝ	2	[FC][FCS35][FCS45][FCS55]
-	09001-10045		CHAIN,ROLLER VFM275	ﾁｪｰﾝ	2	[FC][FCS35][FCS45][FCS55]
-	09001-10047		CHAIN,ROLLER VFM300	ﾁｪｰﾝ	2	[FC][FCS35][FCS45][FCS55]
-	09001-10051		CHAIN,ROLLER VFM320	ﾁｪｰﾝ	2	[FC][FCS35][FCS45][FCS55]
-	09001-10051		CHAIN,ROLLER VFM330	ﾁｪｰﾝ	2	[FC][FCS35][FCS45][FCS55]
-	09001-10055		CHAIN,ROLLER VFM350	ﾁｪｰﾝ	2	[FC][FCS35][FCS45][FCS55]
-	09001-10057		CHAIN,ROLLER VFM366	ﾁｪｰﾝ	2	[FC][FCS35][FCS45][FCS55]
-	09001-10059		CHAIN,ROLLER VFM370	ﾁｪｰﾝ	2	[FC][FCS35][FCS45][FCS55]
-	09001-10059		CHAIN,ROLLER VFM375	ﾁｪｰﾝ	2	[FC][FCS35][FCS45][FCS55]
-	09001-10065		CHAIN,ROLLER VFM400	ﾁｪｰﾝ	2	[FC][FCS35][FCS45][FCS55]
-	09001-10069		CHAIN,ROLLER VFM425	ﾁｪｰﾝ	2	[FC][FCS35][FCS45][FCS55]
-	09001-10073		CHAIN,ROLLER VFM450	ﾁｪｰﾝ	2	[FC][FCS35][FCS45][FCS55]
-	09001-10077		CHAIN,ROLLER VFM475	ﾁｪｰﾝ	2	[FC][FCS35][FCS45][FCS55]
-	09001-10081		CHAIN,ROLLER VFM500	ﾁｪｰﾝ	2	[FC][FCS35][FCS45][FCS55]
-	09001-10089		CHAIN,ROLLER VFM550	ﾁｪｰﾝ	2	[FC][FCS35][FCS45][FCS55]
-	09001-10097		CHAIN,ROLLER VFM600	ﾁｪｰﾝ	2	[FC][FCS35][FCS45][FCS55]
23	23500-82001		PIN,ANCHOR	ﾋﾟﾝ	2	
-	231A0-82001		PIN,ANCHOR	ﾋﾟﾝ	2	[FC][FCS35][FCS45][FCS55]
24	52672-72231		PIN,ANCHOR	ﾋﾟﾝ	2	
-	22218-42111		PIN,ANCHOR	ﾋﾟﾝ	2	[FC][FCS35][FCS45][FCS55]
25	02200-03030		PIN,COTTER	ﾋﾟﾝ	4	
26	22218-40191		NUT	ﾅｯﾄ	4	
27	01402-00018		NUT	ﾅｯﾄ	4	
-	01400-00018		NUT	ﾅｯﾄ	4	[FC][FCS35][FCS45][FCS55]
28	212T0-82101		SUPPORT,CYLINDER	ｻﾎﾟｰﾄ	1	
29	01103-10018		BOLT	ﾎﾞﾙﾄ	2	
30	02011-00010		WASHER	ﾜｯｼｬ	2	
31	214A0-82831		BOLT	ﾎﾞﾙﾄ	1	

FIG.187 LIFT CYLINDER (REAR)[VFM2N5]

(M7020520) リフトシリンダ(リヤー)

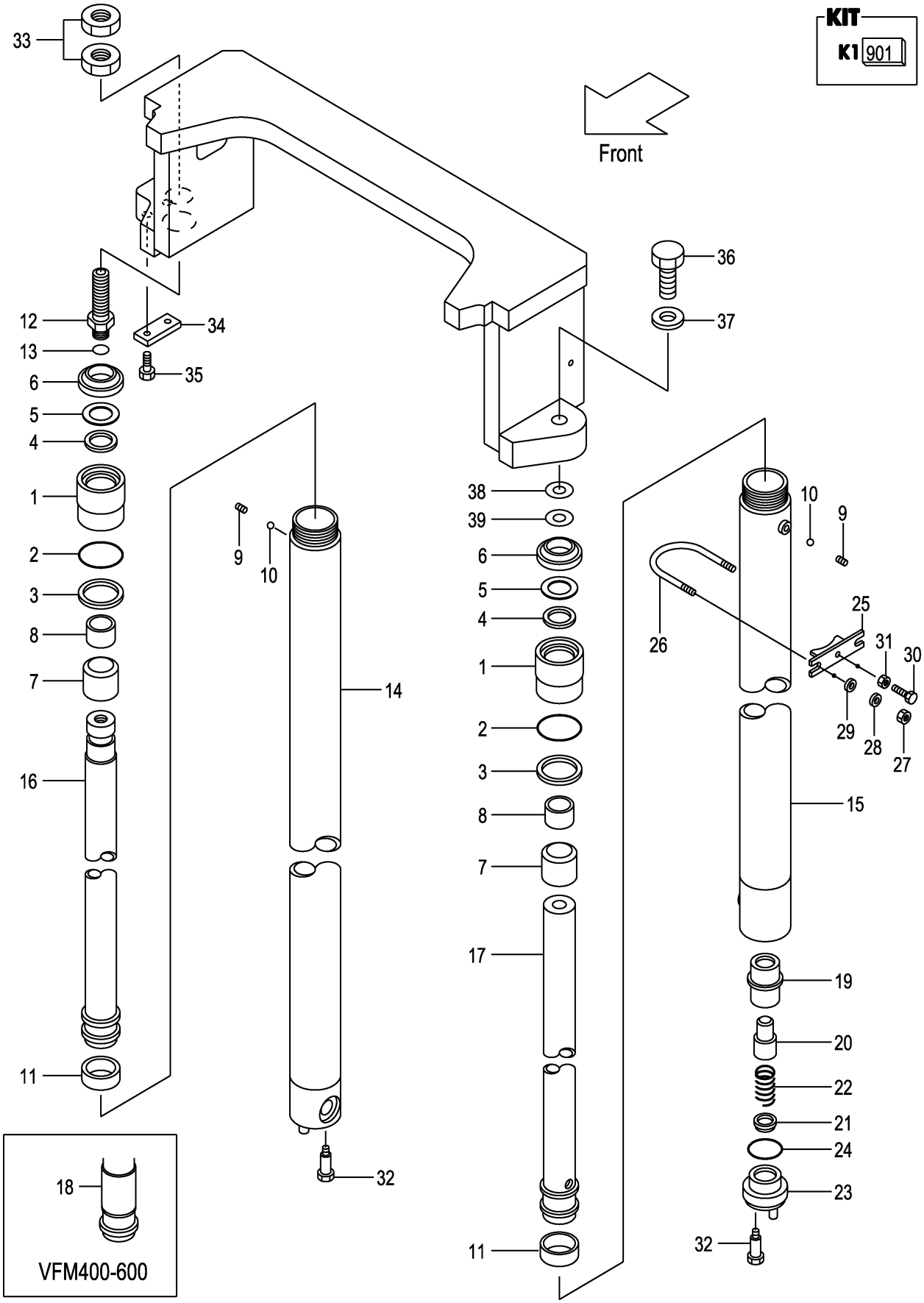

A:VFM2N5(2T)
B:VFM2N5(2.5T)

Item No	Part No.	Mark	Description	Req'd	Remarks : Serial No.
A1	234A0-50211		CYL-ASSY,LIFT,RH VFM200 ﾘﾌﾄｼﾘﾝﾀﾞｱｯｾﾝ	1	INC.1-14,16
-	234A0-50221		CYL-ASSY,LIFT,RH VFM225 ﾘﾌﾄｼﾘﾝﾀﾞｱｯｾﾝ	1	INC.1-14,16
-	234A0-51231		CYL-ASSY,LIFT,RH VFM250 ﾘﾌﾄｼﾘﾝﾀﾞｱｯｾﾝ	1	INC.1-14,16
-	234A0-50241		CYL-ASSY,LIFT,RH VFM270 ﾘﾌﾄｼﾘﾝﾀﾞｱｯｾﾝ	1	INC.1-14,16
-	234A0-50251		CYL-ASSY,LIFT,RH VFM275 ﾘﾌﾄｼﾘﾝﾀﾞｱｯｾﾝ	1	INC.1-14,16
-	234A0-50201		CYL-ASSY,LIFT,RH VFM300 ﾘﾌﾄｼﾘﾝﾀﾞｱｯｾﾝ	1	INC.1-14,16
-	234A0-50261		CYL-ASSY,LIFT,RH VFM325 ﾘﾌﾄｼﾘﾝﾀﾞｱｯｾﾝ	1	INC.1-14,16
-	234A0-50271		CYL-ASSY,LIFT,RH VFM330 ﾘﾌﾄｼﾘﾝﾀﾞｱｯｾﾝ	1	INC.1-14,16
-	234A0-50281		CYL-ASSY,LIFT,RH VFM350 ﾘﾌﾄｼﾘﾝﾀﾞｱｯｾﾝ	1	INC.1-14,16
-	234A0-50291		CYL-ASSY,LIFT,RH VFM366 ﾘﾌﾄｼﾘﾝﾀﾞｱｯｾﾝ	1	INC.1-14,16
-	234A0-50301		CYL-ASSY,LIFT,RH VFM370 ﾘﾌﾄｼﾘﾝﾀﾞｱｯｾﾝ	1	INC.1-14,16
-	234A0-50311		CYL-ASSY,LIFT,RH VFM375 ﾘﾌﾄｼﾘﾝﾀﾞｱｯｾﾝ	1	INC.1-14,16
-	234A0-50321		CYL-ASSY,LIFT,RH VFM400 ﾘﾌﾄｼﾘﾝﾀﾞｱｯｾﾝ	1	INC.1-14,16,18
-	234A0-50331		CYL-ASSY,LIFT,RH VFM425 ﾘﾌﾄｼﾘﾝﾀﾞｱｯｾﾝ	1	INC.1-14,16,18
-	234A0-50341		CYL-ASSY,LIFT,RH VFM450 ﾘﾌﾄｼﾘﾝﾀﾞｱｯｾﾝ	1	INC.1-14,16,18
-	234A0-50351		CYL-ASSY,LIFT,RH VFM475 ﾘﾌﾄｼﾘﾝﾀﾞｱｯｾﾝ	1	INC.1-14,16,18
-	234A0-50361		CYL-ASSY,LIFT,RH VFM500 ﾘﾌﾄｼﾘﾝﾀﾞｱｯｾﾝ	1	INC.1-14,16,18
-	234A0-50371		CYL-ASSY,LIFT,RH VFM550 ﾘﾌﾄｼﾘﾝﾀﾞｱｯｾﾝ	1	INC.1-14,16,18
-	234A0-50381		CYL-ASSY,LIFT,RH VFM600 ﾘﾌﾄｼﾘﾝﾀﾞｱｯｾﾝ	1	INC.1-14,16,18
A2	234A0-50011		CYL-ASSY,LIFT,LH VFM200 ﾘﾌﾄｼﾘﾝﾀﾞｱｯｾﾝ	1	INC.1-11,15,17
-	234A0-50021		CYL-ASSY,LIFT,LH VFM225 ﾘﾌﾄｼﾘﾝﾀﾞｱｯｾﾝ	1	INC.1-11,15,17
-	234A0-50031		CYL-ASSY,LIFT,LH VFM250 ﾘﾌﾄｼﾘﾝﾀﾞｱｯｾﾝ	1	INC.1-11,15,17
-	234A0-50041		CYL-ASSY,LIFT,LH VFM270 ﾘﾌﾄｼﾘﾝﾀﾞｱｯｾﾝ	1	INC.1-11,15,17
-	234A0-50051		CYL-ASSY,LIFT,LH VFM275 ﾘﾌﾄｼﾘﾝﾀﾞｱｯｾﾝ	1	INC.1-11,15,17
-	234A0-50001		CYL-ASSY,LIFT,LH VFM300 ﾘﾌﾄｼﾘﾝﾀﾞｱｯｾﾝ	1	INC.1-11,15,17

FIG.187 LIFT CYLINDER (REAR)[VFM2N5]

(M7020520) リフトシリンダ(リヤー)

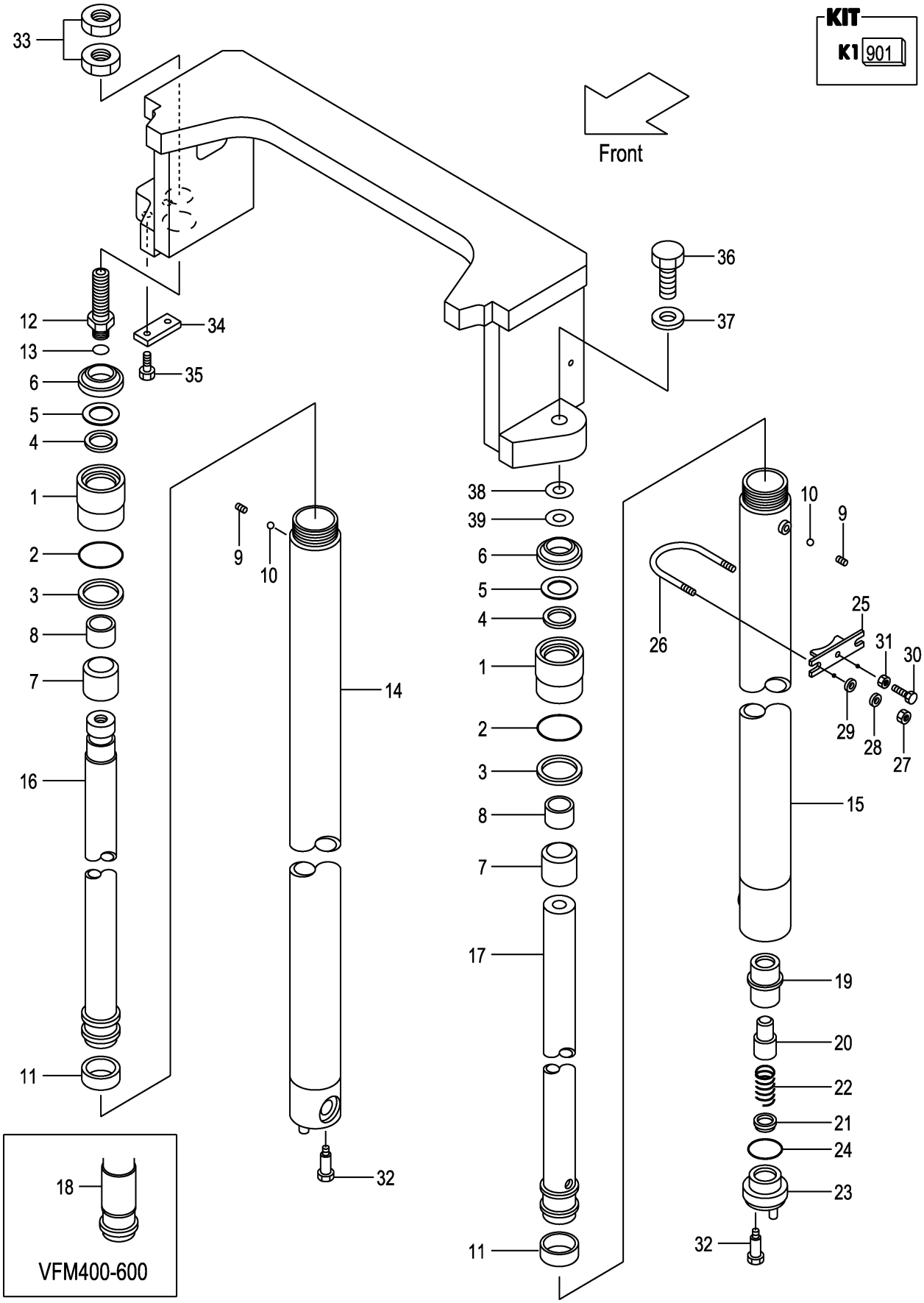

A:VFM2N5(2T)
B:VFM2N5(2.5T)

Item No	Part No.	Mark	Description		Req'd	Remarks : Serial No.
-	234A0-50061		CYL-ASSY,LIFT,LH VFM325	ﾘﾌﾄｼﾘﾝﾀﾞｱｯｾﾝ	1	INC.1-11,15,17
-	234A0-50071		CYL-ASSY,LIFT,LH VFM330	ﾘﾌﾄｼﾘﾝﾀﾞｱｯｾﾝ	1	INC.1-11,15,17
-	234A0-50081		CYL-ASSY,LIFT,LH VFM350	ﾘﾌﾄｼﾘﾝﾀﾞｱｯｾﾝ	1	INC.1-11,15,17
-	234A0-50091		CYL-ASSY,LIFT,LH VFM366	ﾘﾌﾄｼﾘﾝﾀﾞｱｯｾﾝ	1	INC.1-11,15,17
-	234A0-50101		CYL-ASSY,LIFT,LH VFM370	ﾘﾌﾄｼﾘﾝﾀﾞｱｯｾﾝ	1	INC.1-11,15,17
-	234A0-50111		CYL-ASSY,LIFT,LH VFM375	ﾘﾌﾄｼﾘﾝﾀﾞｱｯｾﾝ	1	INC.1-11,15,17
-	234A0-50121		CYL-ASSY,LIFT,LH VFM400	ﾘﾌﾄｼﾘﾝﾀﾞｱｯｾﾝ	1	INC.1-11,15,17,18
-	234A0-50131		CYL-ASSY,LIFT,LH VFM425	ﾘﾌﾄｼﾘﾝﾀﾞｱｯｾﾝ	1	INC.1-11,15,17,18
-	234A0-50141		CYL-ASSY,LIFT,LH VFM450	ﾘﾌﾄｼﾘﾝﾀﾞｱｯｾﾝ	1	INC.1-11,15,17,18
-	234A0-50151		CYL-ASSY,LIFT,LH VFM475	ﾘﾌﾄｼﾘﾝﾀﾞｱｯｾﾝ	1	INC.1-11,15,17,18
-	234A0-50161		CYL-ASSY,LIFT,LH VFM500	ﾘﾌﾄｼﾘﾝﾀﾞｱｯｾﾝ	1	INC.1-11,15,17,18
-	234A0-50171		CYL-ASSY,LIFT,LH VFM550	ﾘﾌﾄｼﾘﾝﾀﾞｱｯｾﾝ	1	INC.1-11,15,17,18
-	234A0-50181		CYL-ASSY,LIFT,LH VFM600	ﾘﾌﾄｼﾘﾝﾀﾞｱｯｾﾝ	1	INC.1-11,15,17,18
901	214A0-59821	K1	KIT,OVERHAUL	ｵｰﾊﾞﾎｰﾙｷｯﾄ	2	INC.2-6,11,24
1	234A0-52501		CAP,CYL	ｷｬｯﾌﾟ	2	
2	210F8-42631	*	O-RING	Oﾘﾝｸﾞ	2	
3	214A0-53681	*	RING,BACK-UP	ﾘﾝｸﾞ	2	
4	23650-52851	*	PACKING	ﾊﾟｯｷﾝｸﾞ	2	
5	23650-52861	*	RING,BACK-UP	ﾘﾝｸﾞ	2	
6	27410-53111	*	SEAL,DUST	ｼｰﾙ	2	
7	234A0-52511		SLEEVE	ｽﾘｰﾌﾞ	2	
8	23650-52841		BUSHING	ﾌﾞｯｼﾝｸﾞ	2	
9	234A0-52611		PLUG	ﾌﾟﾗｸﾞ	2	
10	03190-00006		BALL	ﾎﾞｰﾙ	2	
11	22580-53321	*	WEARING	ｳｴｱﾘﾝｸﾞ	2	
12	214A0-53721		NIPPLE	ﾆｯﾌﾟﾙ	1	(RH)
13	03320-00180		O-RING	Oﾘﾝｸﾞ	1	(RH)
14	234A0-50711		BODY,CYL,RH VFM200	ﾎﾞﾃﾞｨ	1	
-	234A0-50721		BODY,CYL,RH VFM225	ﾎﾞﾃﾞｨ	1	
-	234A0-50731		BODY,CYL,RH VFM250	ﾎﾞﾃﾞｨ	1	
-	234A0-50741		BODY,CYL,RH VFM270	ﾎﾞﾃﾞｨ	1	
-	234A0-50751		BODY,CYL,RH VFM275	ﾎﾞﾃﾞｨ	1	
-	234A0-50701		BODY,CYL,RH VFM300	ﾎﾞﾃﾞｨ	1	
-	234A0-50761		BODY,CYL,RH VFM325	ﾎﾞﾃﾞｨ	1	
-	234A0-50771		BODY,CYL,RH VFM330	ﾎﾞﾃﾞｨ	1	
-	234A0-50781		BODY,CYL,RH VFM350	ﾎﾞﾃﾞｨ	1	
-	234A0-50791		BODY,CYL,RH VFM366	ﾎﾞﾃﾞｨ	1	

FIG.187 LIFT CYLINDER (REAR)[VFM2N5]

(M7020520) リフトシリンダ(リヤー)

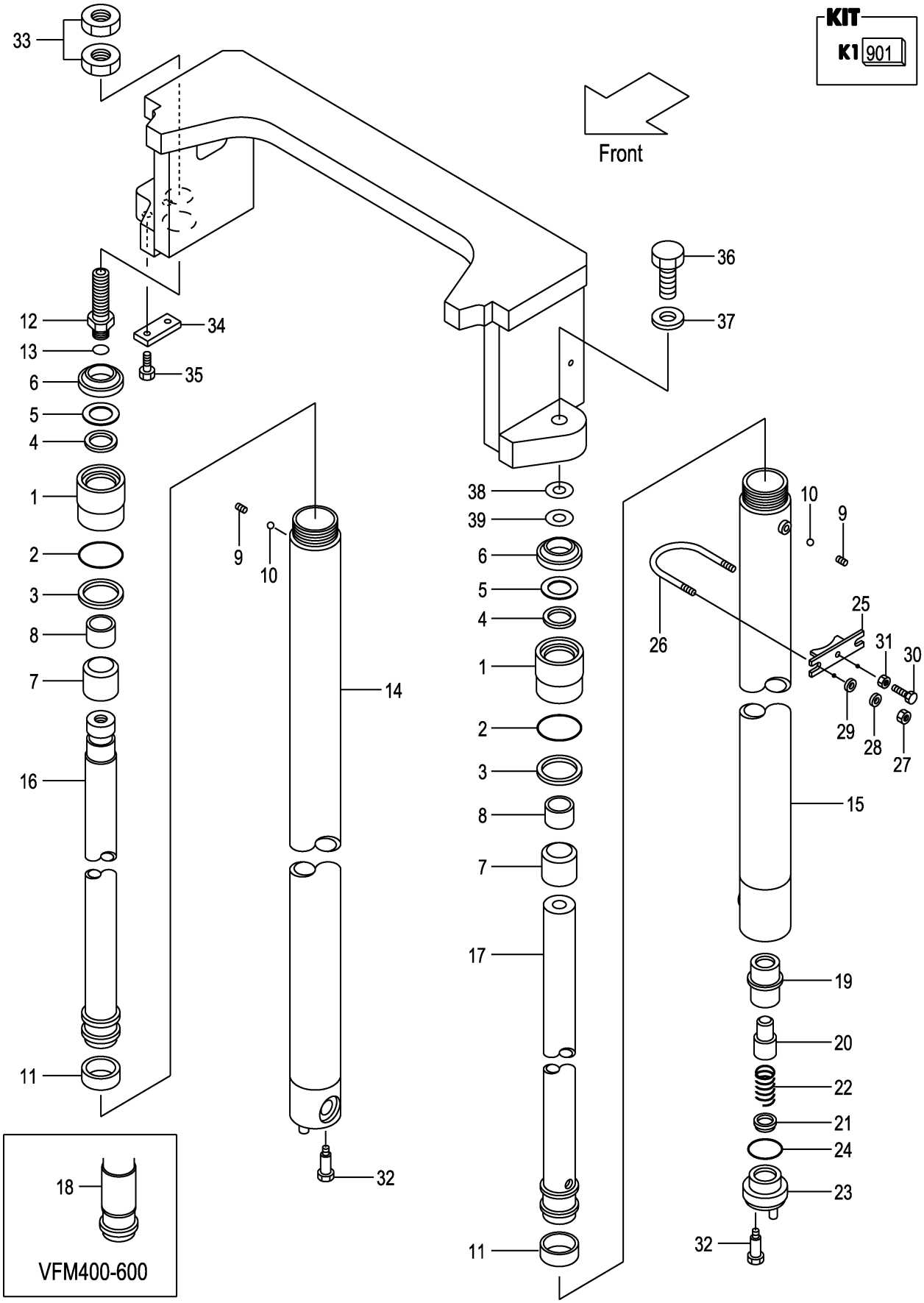

A:VFM2N5(2T)
B:VFM2N5(2.5T)

Item No	Part No.	Mark	Description	Req'd	Remarks : Serial No.
-	234A0-50801		BODY,CYL,RH VFM370 ﾎﾞﾃﾞｨ	1	
-	234A0-50811		BODY,CYL,RH VFM375 ﾎﾞﾃﾞｨ	1	
-	234A0-50821		BODY,CYL,RH VFM400 ﾎﾞﾃﾞｨ	1	
-	234A0-50831		BODY,CYL,RH VFM425 ﾎﾞﾃﾞｨ	1	
-	234A0-50841		BODY,CYL,RH VFM450 ﾎﾞﾃﾞｨ	1	
-	234A0-50851		BODY,CYL,RH VFM475 ﾎﾞﾃﾞｨ	1	
-	234A0-50861		BODY,CYL,RH VFM500 ﾎﾞﾃﾞｨ	1	
-	234A0-50871		BODY,CYL,RH VFM550 ﾎﾞﾃﾞｨ	1	
-	234A0-50881		BODY,CYL,RH VFM600 ﾎﾞﾃﾞｨ	1	
15	234A0-50511		BODY,CYL,LH VFM200 ﾎﾞﾃﾞｨ	1	
-	234A0-50521		BODY,CYL,LH VFM225 ﾎﾞﾃﾞｨ	1	
-	234A0-50531		BODY,CYL,LH VFM250 ﾎﾞﾃﾞｨ	1	
-	234A0-50541		BODY,CYL,LH VFM270 ﾎﾞﾃﾞｨ	1	
-	234A0-50551		BODY,CYL,LH VFM275 ﾎﾞﾃﾞｨ	1	
-	234A0-50501		BODY,CYL,LH VFM300 ﾎﾞﾃﾞｨ	1	
-	234A0-50561		BODY,CYL,LH VFM325 ﾎﾞﾃﾞｨ	1	
-	234A0-50571		BODY,CYL,LH VFM330 ﾎﾞﾃﾞｨ	1	
-	234A0-50581		BODY,CYL,LH VFM350 ﾎﾞﾃﾞｨ	1	
-	234A0-50591		BODY,CYL,LH VFM366 ﾎﾞﾃﾞｨ	1	
-	234A0-50601		BODY,CYL,LH VFM370 ﾎﾞﾃﾞｨ	1	
-	234A0-50611		BODY,CYL,LH VFM375 ﾎﾞﾃﾞｨ	1	
-	234A0-50621		BODY,CYL,LH VFM400 ﾎﾞﾃﾞｨ	1	
-	234A0-50631		BODY,CYL,LH VFM425 ﾎﾞﾃﾞｨ	1	
-	234A0-50641		BODY,CYL,LH VFM450 ﾎﾞﾃﾞｨ	1	
-	234A0-50651		BODY,CYL,LH VFM475 ﾎﾞﾃﾞｨ	1	
-	234A0-50661		BODY,CYL,LH VFM500 ﾎﾞﾃﾞｨ	1	
-	234A0-50671		BODY,CYL,LH VFM550 ﾎﾞﾃﾞｨ	1	
-	234A0-50681		BODY,CYL,LH VFM600 ﾎﾞﾃﾞｨ	1	
16	214A0-51711		ROD,PISTON,RH VFM200 ﾛｯﾄﾞ	1	
-	214A0-51721		ROD,PISTON,RH VFM225 ﾛｯﾄﾞ	1	
-	214A0-51731		ROD,PISTON,RH VFM250 ﾛｯﾄﾞ	1	
-	214A0-51741		ROD,PISTON,RH VFM270 ﾛｯﾄﾞ	1	
-	214A0-51751		ROD,PISTON,RH VFM275 ﾛｯﾄﾞ	1	
-	214A0-51701		ROD,PISTON,RH VFM300 ﾛｯﾄﾞ	1	
-	214A0-51761		ROD,PISTON,RH VFM325 ﾛｯﾄﾞ	1	
-	214A0-51771		ROD,PISTON,RH VFM330 ﾛｯﾄﾞ	1	
-	214A0-51781		ROD,PISTON,RH VFM350 ﾛｯﾄﾞ	1	
-	214A0-51791		ROD,PISTON,RH VFM366 ﾛｯﾄﾞ	1	
-	214A0-51801		ROD,PISTON,RH VFM370 ﾛｯﾄﾞ	1	
-	214A0-51811		ROD,PISTON,RH VFM375 ﾛｯﾄﾞ	1	
-	214A0-51821		ROD,PISTON,RH VFM400 ﾛｯﾄﾞ	1	
-	214A0-51831		ROD,PISTON,RH VFM425 ﾛｯﾄﾞ	1	
-	214A0-51841		ROD,PISTON,RH VFM450 ﾛｯﾄﾞ	1	
-	214A0-51851		ROD,PISTON,RH VFM475 ﾛｯﾄﾞ	1	
-	214A0-51861		ROD,PISTON,RH VFM500 ﾛｯﾄﾞ	1	
-	214A0-51871		ROD,PISTON,RH VFM550 ﾛｯﾄﾞ	1	
-	214A0-51881		ROD,PISTON,RH VFM600 ﾛｯﾄﾞ	1	
17	229F0-51211		ROD,PISTON,LH VFM200 ﾛｯﾄﾞ	1	
-	229F0-51221		ROD,PISTON,LH VFM225 ﾛｯﾄﾞ	1	
-	229F0-51231		ROD,PISTON,LH VFM250 ﾛｯﾄﾞ	1	

FIG.187 LIFT CYLINDER (REAR)[VFM2N5]

(M7020520) リフトシリンダ(リヤー)

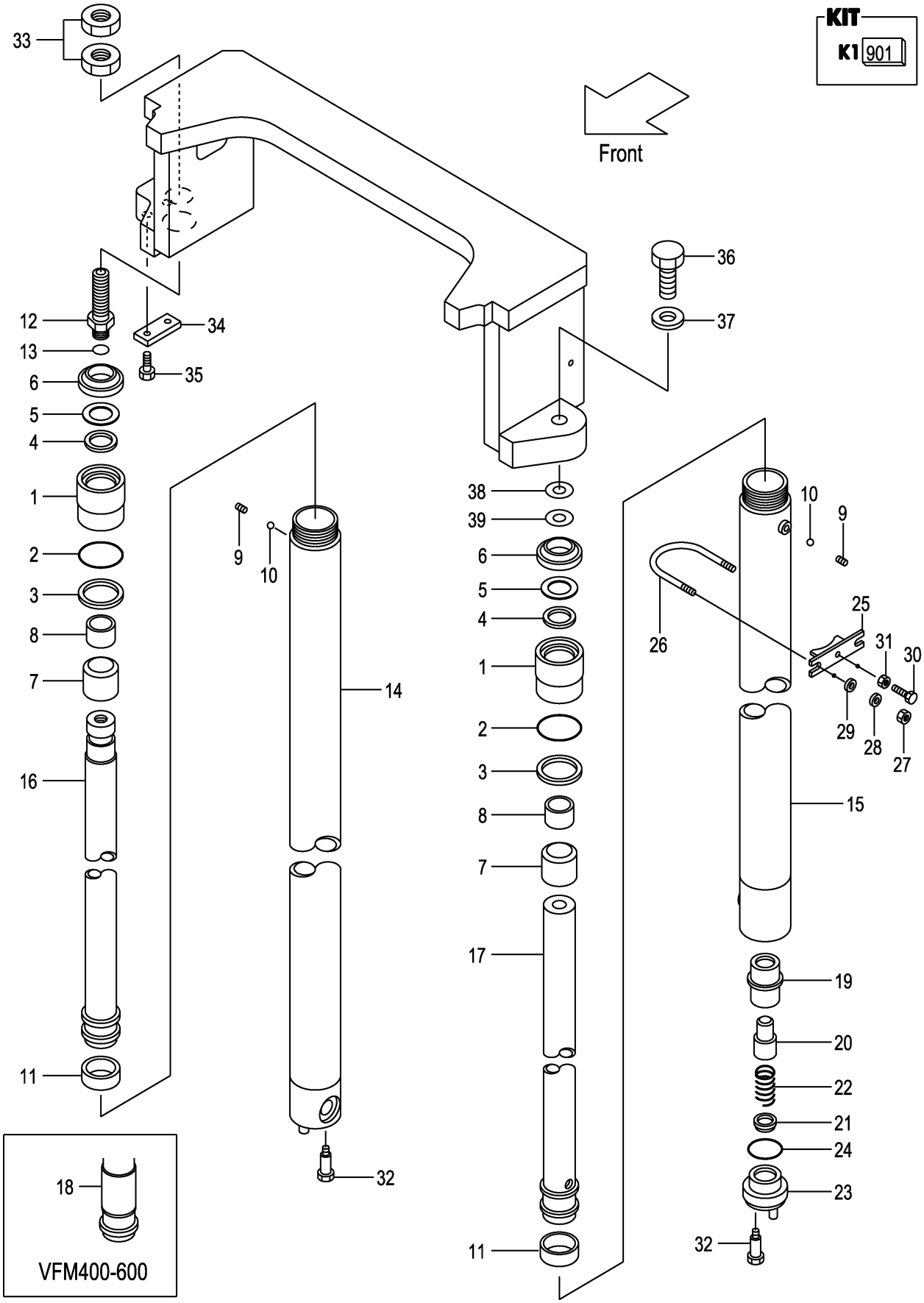

A:VFM2N5(2T)
B:VFM2N5(2.5T)

Item No	Part No.	Mark	Description		Req'd	Remarks : Serial No.
-	229F0-51241		ROD,PISTON,LH VFM270	ﾛｯﾄﾞ	1	
-	229F0-51251		ROD,PISTON,LH VFM275	ﾛｯﾄﾞ	1	
-	229F0-51201		ROD,PISTON,LH VFM300	ﾛｯﾄﾞ	1	
-	229F0-51261		ROD,PISTON,LH VFM325	ﾛｯﾄﾞ	1	
-	229F0-51271		ROD,PISTON,LH VFM330	ﾛｯﾄﾞ	1	
-	229F0-51281		ROD,PISTON,LH VFM350	ﾛｯﾄﾞ	1	
-	229F0-51291		ROD,PISTON,LH VFM366	ﾛｯﾄﾞ	1	
-	229F0-51301		ROD,PISTON,LH VFM370	ﾛｯﾄﾞ	1	
-	229F0-51311		ROD,PISTON,LH VFM375	ﾛｯﾄﾞ	1	
-	229F0-51321		ROD,PISTON,LH VFM400	ﾛｯﾄﾞ	1	
-	229F0-51331		ROD,PISTON,LH VFM425	ﾛｯﾄﾞ	1	
-	229F0-51341		ROD,PISTON,LH VFM450	ﾛｯﾄﾞ	1	
-	229F0-51351		ROD,PISTON,LH VFM475	ﾛｯﾄﾞ	1	
-	229F0-51361		ROD,PISTON,LH VFM500	ﾛｯﾄﾞ	1	
-	229F0-51371		ROD,PISTON,LH VFM550	ﾛｯﾄﾞ	1	
-	229F0-51381		ROD,PISTON,LH VFM600	ﾛｯﾄﾞ	1	
18	214A0-53901		SPACER	ｽﾍﾟｰｻ	2	(VFM400-500)
-	214A0-53901		SPACER	ｽﾍﾟｰｻ	4	(VFM550-600)
19	53658-43021		SLEEVE	ｽﾘｰﾌﾞ	1	
20	53658-43011		PISTON	ﾋﾟｽﾄﾝ	1	
21	53658-43001		CHECK	ﾁｪｯｸ	1	
22	53658-43031		SPRING	ｽﾌﾟﾘﾝｸﾞ	1	
23	53658-43041		PLUG	ﾌﾟﾗｸﾞ	1	
24	03320-00340	*	O-RING	Oﾘﾝｸﾞ	1	
25	22N58-43011		SUPPORT	ｻﾎﾟｰﾄ	2	(VFM200-375)
-	22N58-43011		SUPPORT	ｻﾎﾟｰﾄ	4	(VFM400-600)
26	234A8-42551		U-BOLT	Uﾎﾞﾙﾄ	2	(VFM200-375)
-	234A8-42551		U-BOLT	Uﾎﾞﾙﾄ	4	(VFM400-600)
27	234A8-42561		NUT	ﾅｯﾄ	4	(VFM200-375)
-	234A8-42561		NUT	ﾅｯﾄ	8	(VFM400-600)
28	02010-20010		WASHER	ﾜｯｼｬ	4	(VFM200-375)
-	02010-20010		WASHER	ﾜｯｼｬ	8	(VFM400-600)
29	02000-20010		WASHER	ﾜｯｼｬ	4	(VFM200-375)
-	02000-20010		WASHER	ﾜｯｼｬ	8	(VFM400-600)
30	232A8-42201		BOLT	ﾎﾞﾙﾄ	2	(VFM200-375)
-	232A8-42201		BOLT	ﾎﾞﾙﾄ	4	(VFM400-600)
31	234A8-42571		NUT	ﾅｯﾄ	2	(VFM200-375)
-	234A8-42571		NUT	ﾅｯﾄ	4	(VFM400-600)
32	214A8-42661		BOLT	ﾎﾞﾙﾄ	2	
33	24320-52001		NUT	ﾅｯﾄ	2	(RH)
34	282M8-32501		PLATE,KEY	ﾌﾟﾚｰﾄ	1	(RH)
35	01184-10020		BOLT	ﾎﾞﾙﾄ	2	(RH)
36	01103-14040		BOLT	ﾎﾞﾙﾄ	1	(LH)
37	02011-00014		WASHER	ﾜｯｼｬ	1	(LH)
38	23917-42191		SHIM,T-1.0	ｼﾑ	5	(LH)
39	22679-43831		SHIM,T-0.2	ｼﾑ	5	(LH)

FIG.188 MAST PIPING [VFM2N5]

(M7020530) マストパイピング

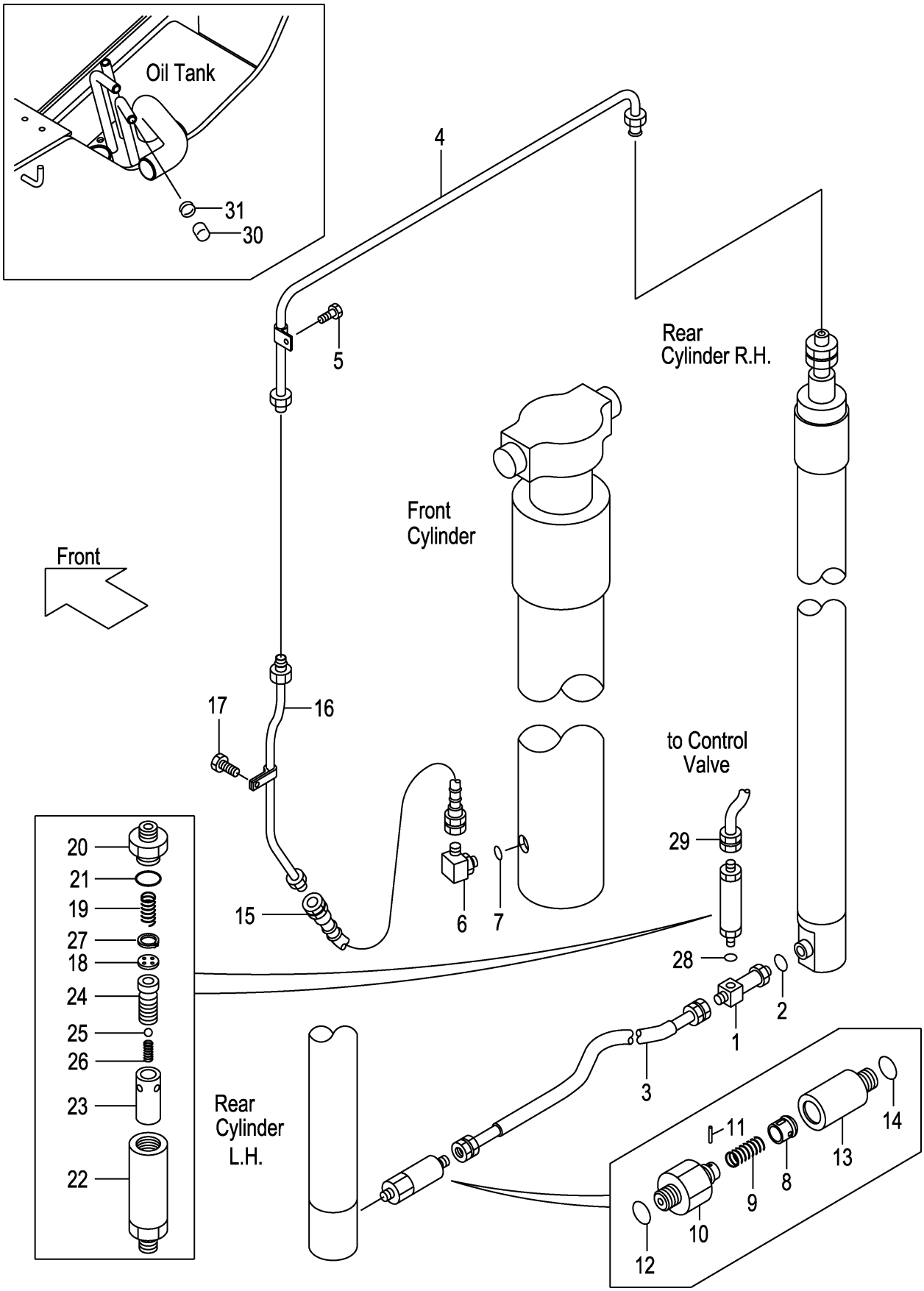

A:VFM2N5(2T)
B:VFM2N5(2.5T)

Item No	Part No.	Mark	Description		Req'd	Remarks : Serial No.
A1	234A8-41101		THREE-WAY-ASSY	ｽﾘｰｳｪｲｱｯｾﾝ	1	INC.1,2
1	NO PART NO.	#	THREE-WAY	ｽﾘｰｳｴｲ	1	
2	03320-00140		O-RING	Oﾘﾝｸﾞ	1	
3	277T0-62071		HOSE	ﾎｰｽ	1	
4	232A0-62001		PIPE	ﾊﾟｲﾌﾟ	1	
5	01183-06016		BOLT	ﾎﾞﾙﾄ	1	
A2	04150-20404		ELBOW-ASSY	ｴﾙﾎﾞｱｯｾﾝ	1	INC.6,7
6	NO PART NO.	#	ELBOW	ｴﾙﾎﾞ	1	
7	03320-00180		O-RING	Oﾘﾝｸﾞ	1	
A3	234A0-62051		VALVE-ASSY,CUT	ｶｯﾄﾊﾞﾙﾌﾞｱｯｾﾝ	1	INC.8-14
A4	234A8-40701		VALVE-SUB-ASSY	ﾊﾞﾙﾌﾞｻﾌﾞｱｯｾﾝ	1	INC.8-12
8	234A8-42602		PISTON	ﾋﾟｽﾄﾝ	1	
9	234A8-42611		SPRING	ｽﾌﾟﾘﾝｸﾞ	1	
10	234A8-42622		NIPPLE	ﾆｯﾌﾟﾙ	1	
11	02270-01014		PIN	ﾋﾟﾝ	1	
12	03320-00140		O-RING	Oﾘﾝｸﾞ	1	
13	234A0-62111		ADAPTER	ｱﾀﾞﾌﾟﾀ	1	
14	03320-00140		O-RING	Oﾘﾝｸﾞ	1	
15	214A0-62151		HOSE	ﾎｰｽ	1	
16	277P0-60301		PIPE VFM200	ﾊﾟｲﾌﾟ	1	
-	277P0-60311		PIPE VFM225	ﾊﾟｲﾌﾟ	1	
-	277P0-60321		PIPE VFM250	ﾊﾟｲﾌﾟ	1	
-	277P0-60331		PIPE VFM270	ﾊﾟｲﾌﾟ	1	
-	277P0-60341		PIPE VFM275	ﾊﾟｲﾌﾟ	1	
-	277P0-60351		PIPE VFM300	ﾊﾟｲﾌﾟ	1	
-	277P0-60361		PIPE VFM325	ﾊﾟｲﾌﾟ	1	
-	277P0-60371		PIPE VFM330	ﾊﾟｲﾌﾟ	1	
-	277P0-60381		PIPE VFM350	ﾊﾟｲﾌﾟ	1	
-	277P0-60391		PIPE VFM366	ﾊﾟｲﾌﾟ	1	
-	277P0-60401		PIPE VFM370	ﾊﾟｲﾌﾟ	1	
-	277P0-60411		PIPE VFM375	ﾊﾟｲﾌﾟ	1	
-	277P0-60421		PIPE VFM400	ﾊﾟｲﾌﾟ	1	
-	277P0-60431		PIPE VFM425	ﾊﾟｲﾌﾟ	1	
-	277P0-60441		PIPE VFM450	ﾊﾟｲﾌﾟ	1	
-	277P0-60451		PIPE VFM475	ﾊﾟｲﾌﾟ	1	
-	277P0-60461		PIPE VFM500	ﾊﾟｲﾌﾟ	1	
-	277P0-60471		PIPE VFM550	ﾊﾟｲﾌﾟ	1	
-	277P0-60481		PIPE VFM600	ﾊﾟｲﾌﾟ	1	
17	01183-06016		BOLT	ﾎﾞﾙﾄ	1	
A5	234A8-41001		REGULATOR-ASSY,FLOW	ﾌﾛｰﾚｷﾞｭﾚｰﾀｱｯｾﾝ	1	INC.18-27
18	NO PART NO.	#	PLATE	ﾌﾟﾚｰﾄ	1	
19	27979-43101		SPRING	ｽﾌﾟﾘﾝｸﾞ	1	
20	NO PART NO.	#	NIPPLE	ﾆｯﾌﾟﾙ	1	
21	03300-00280		O-RING	Oﾘﾝｸﾞ	1	
22	NO PART NO.	#	CASE	ｹｰｽ	1	
23	NO PART NO.	#	SLEEVE	ｽﾘｰﾌﾞ	1	
24	NO PART NO.	#	PISTON	ﾋﾟｽﾄﾝ	1	
25	24459-42951		BALL,NYLON	ﾎﾞｰﾙ	1	
26	214A8-44151		SPRING	ｽﾌﾟﾘﾝｸﾞ	1	
27	02110-00018		RING,SNAP	ﾘﾝｸﾞ	1	

FIG.188 MAST PIPING [VFM2N5]

(M7020530) マストパイピング

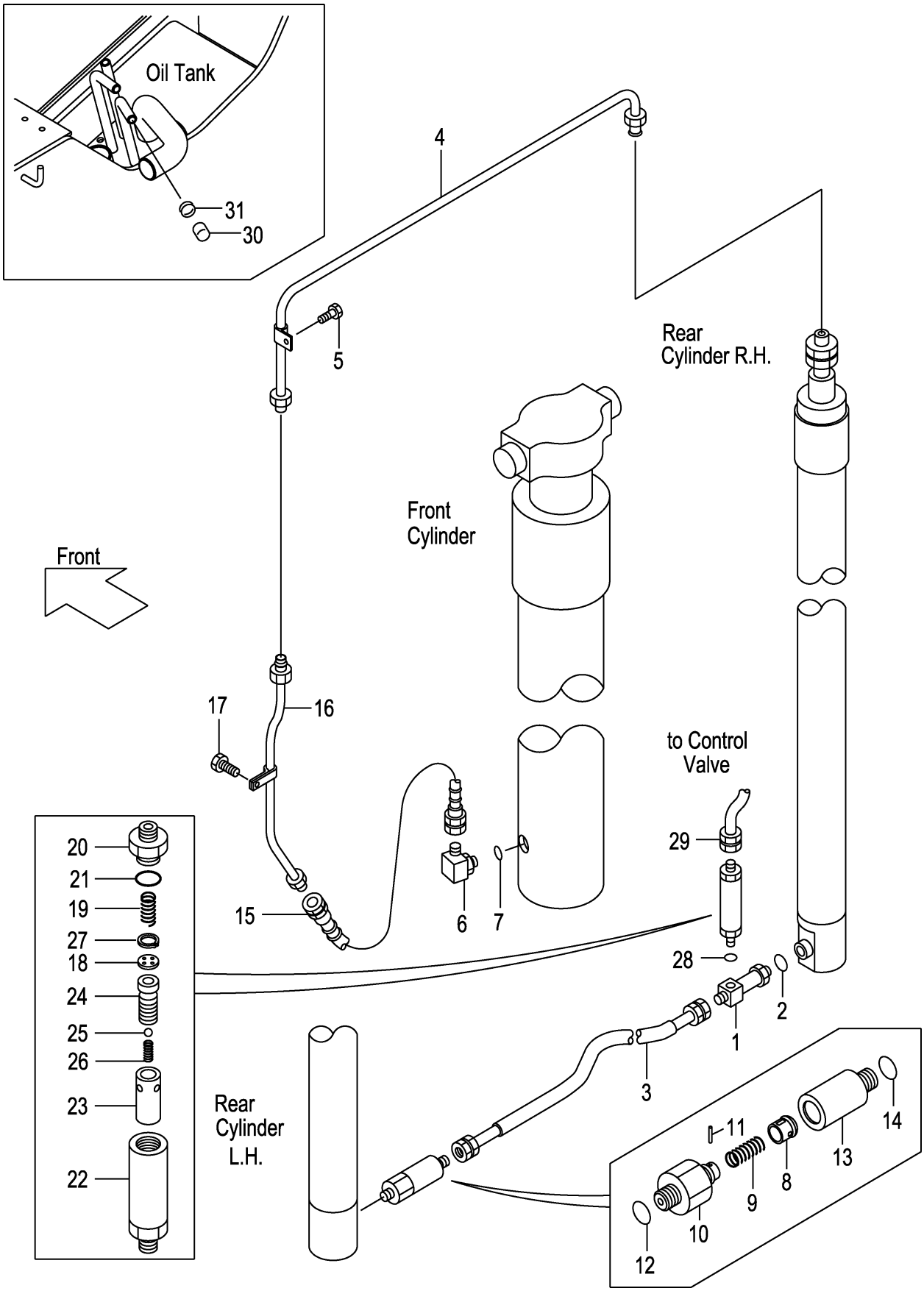

A:VFM2N5(2T)
B:VFM2N5(2.5T)

Item No	Part No.	Mark	Description		Req'd	Remarks : Serial No.
28	03320-00180		O-RING	Oﾘﾝｸﾞ	1	
29	234A8-02101		HOSE	ﾎｰｽ	1	
30	55593-62551		CAP	ｷｬｯﾌﾟ	1	
31	04914-00019		CLIP	ｸﾘｯﾌﾟ	1	

FIG.189 FORK [VFM2N4]

(M70281A0) フォーク

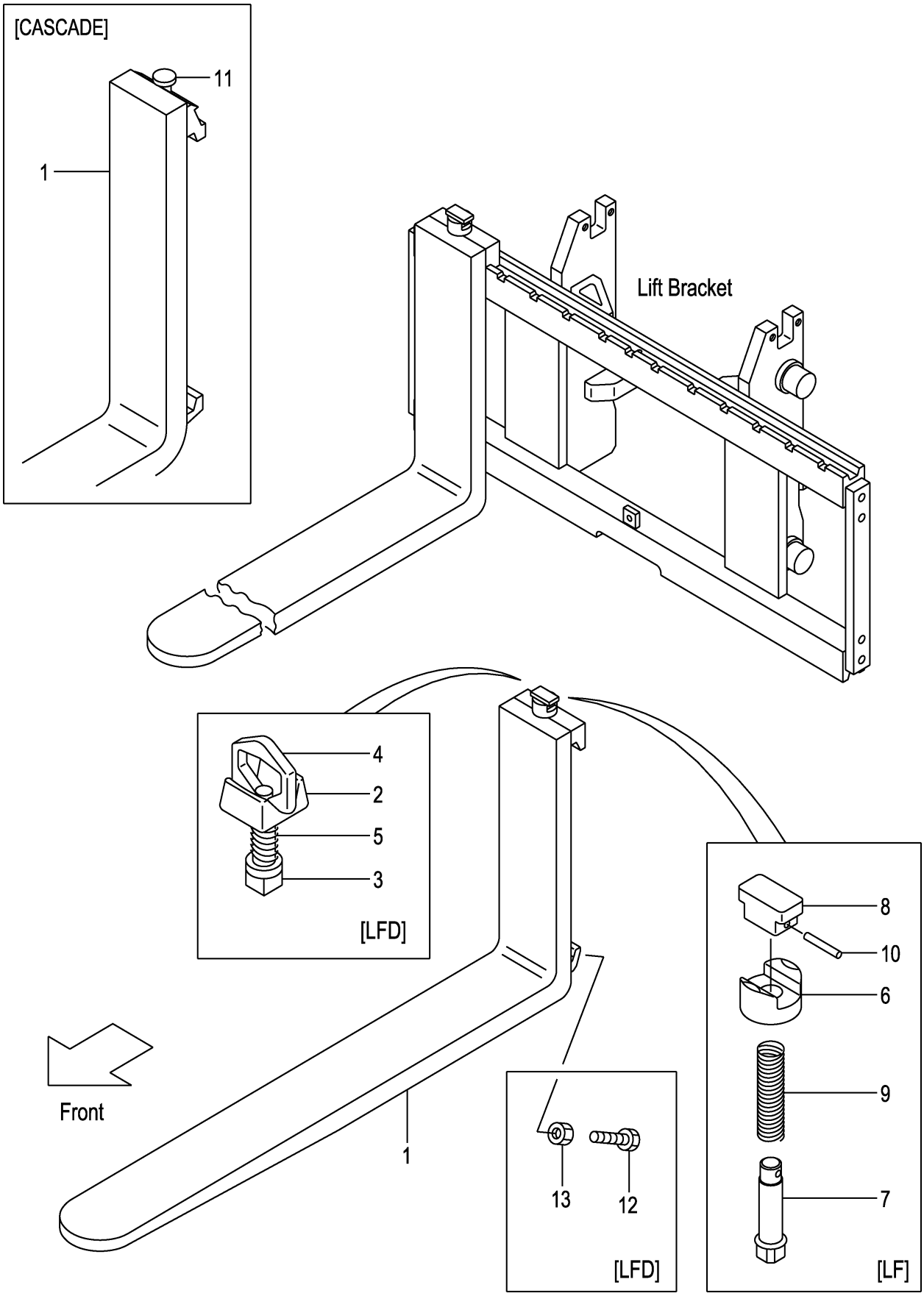

A:VFM2N4(2T)
B:VFM2N4(2.5T)

Item No	Part No.	Mark	Description		Req'd	Remarks : Serial No.
1	231A8-10101		FORK	ﾌｫｰｸ	2	A (L=920) INC.6-10
-	214A8-10512		FORK	ﾌｫｰｸ	2	B (L=1070) INC.6-10
-	231A8-10171		FORK	ﾌｫｰｸ	2	A [LF090] INC.6-10
-	231F8-10571		FORK	ﾌｫｰｸ	2	B [LF090] INC.6-10
-	231A8-10101		FORK	ﾌｫｰｸ	2	A [LF092] INC.6-10
-	231F8-10501		FORK	ﾌｫｰｸ	2	B [LF092] INC.6-10
-	214A8-10582		FORK	ﾌｫｰｸ	2	[LF100] INC.6-10
-	214A8-10512		FORK	ﾌｫｰｸ	2	[LF107] INC.6-10
-	214A8-10592		FORK	ﾌｫｰｸ	2	[LF110] INC.6-10
-	214A8-10602		FORK	ﾌｫｰｸ	2	[LF120] INC.6-10
-	214A8-10522		FORK	ﾌｫｰｸ	2	[LF122] INC.6-10
-	214A8-10612		FORK	ﾌｫｰｸ	2	[LF130] INC.6-10
-	214A8-10532		FORK	ﾌｫｰｸ	2	[LF137] INC.6-10
-	214A8-10622		FORK	ﾌｫｰｸ	2	[LF140] INC.6-10
-	214A8-10632		FORK	ﾌｫｰｸ	2	[LF150] INC.6-10
-	214A8-10542		FORK	ﾌｫｰｸ	2	[LF152] INC.6-10
-	214A8-10642		FORK	ﾌｫｰｸ	2	[LF160] INC.6-10
-	214A8-10552		FORK	ﾌｫｰｸ	2	[LF167] INC.6-10
-	214A8-10653		FORK	ﾌｫｰｸ	2	[LF170] INC.6-10
-	214A8-10663		FORK	ﾌｫｰｸ	2	[LF180] INC.6-10
-	214A8-10563		FORK	ﾌｫｰｸ	2	[LF182] INC.6-10
-	214A8-10673		FORK	ﾌｫｰｸ	2	[LF190] INC.6-10
-	214A8-10683		FORK	ﾌｫｰｸ	2	[LF200] INC.6-10
-	234A8-10571		FORK	ﾌｫｰｸ	2	[LFD090] INC.2-5
-	234A8-10501		FORK	ﾌｫｰｸ	2	[LFD092] INC.2-5
-	234A8-10581		FORK	ﾌｫｰｸ	2	[LFD100] INC.2-5
-	234A8-10511		FORK	ﾌｫｰｸ	2	[LFD107] INC.2-5
-	234A8-10591		FORK	ﾌｫｰｸ	2	[LFD110] INC.2-5
-	234A8-10601		FORK	ﾌｫｰｸ	2	[LFD120] INC.2-5
-	234A8-10521		FORK	ﾌｫｰｸ	2	[LFD122] INC.2-5
-	234A8-10611		FORK	ﾌｫｰｸ	2	[LFD130] INC.2-5
-	234A8-10531		FORK	ﾌｫｰｸ	2	[LFD137] INC.2-5
-	234A8-10621		FORK	ﾌｫｰｸ	2	[LFD140] INC.2-5
-	234A8-10631		FORK	ﾌｫｰｸ	2	[LFD150] INC.2-5
-	234A8-10541		FORK	ﾌｫｰｸ	2	[LFD152] INC.2-5
-	234A8-10641		FORK	ﾌｫｰｸ	2	[LFD160] INC.2-5
-	234A8-10551		FORK	ﾌｫｰｸ	2	[LFD167] INC.2-5
-	234A8-10652		FORK	ﾌｫｰｸ	2	[LFD170] INC.2-5
-	234A8-10662		FORK	ﾌｫｰｸ	2	[LFD180] INC.2-5
-	234A8-10562		FORK	ﾌｫｰｸ	2	[LFD182] INC.2-5
-	234A8-10672		FORK	ﾌｫｰｸ	2	[LFD190] INC.2-5
-	234A8-10682		FORK	ﾌｫｰｸ	2	[LFD200] INC.2-5
-	22N58-10501		FORK	ﾌｫｰｸ	2	[LF092/CASCADE] INC.11
-	22N58-10511		FORK	ﾌｫｰｸ	2	[LF107/CASCADE] INC.11

FIG.189 FORK [VFM2N4]

(M70281A0) フォーク

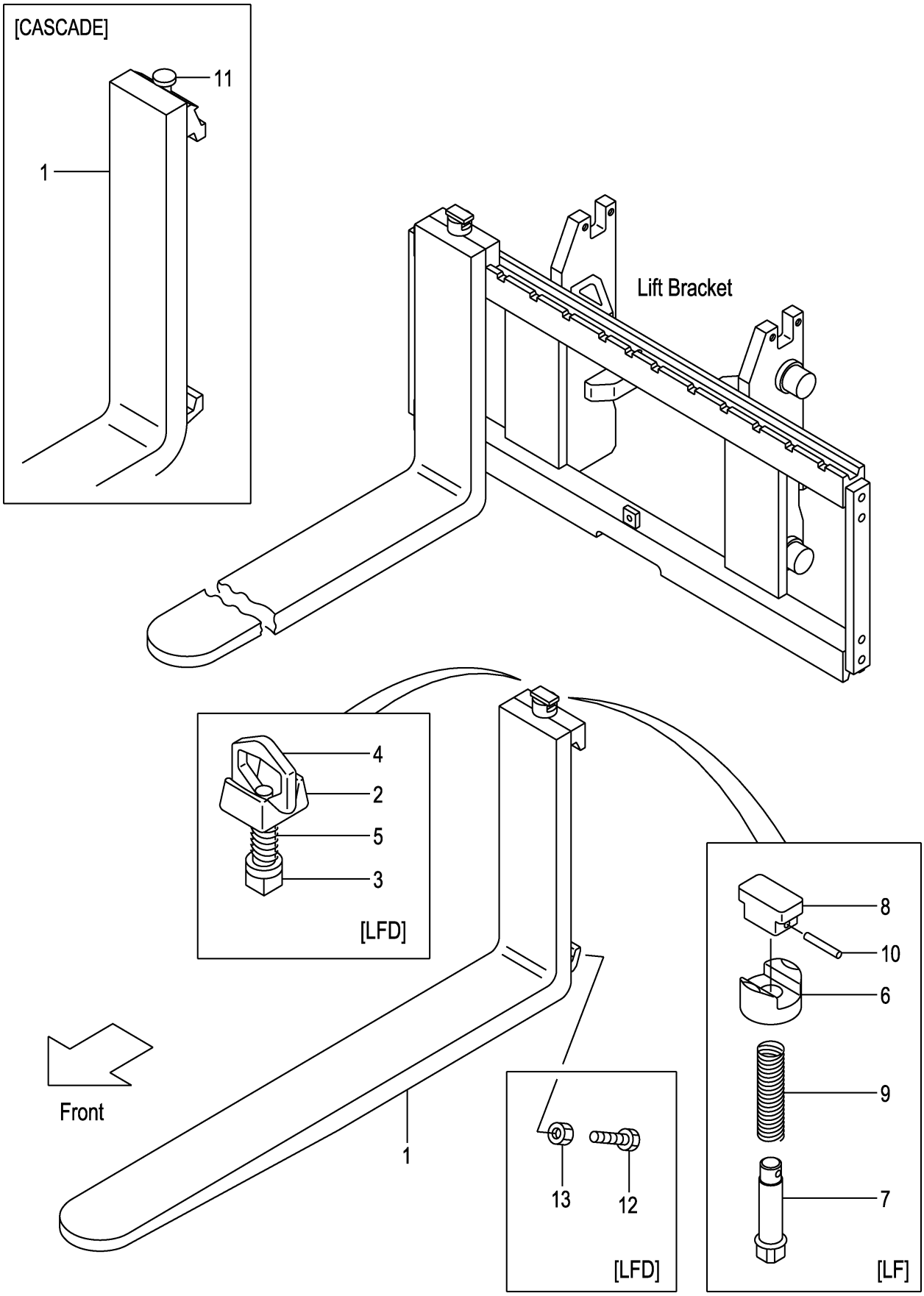

A:VFM2N4(2T)
B:VFM2N4(2.5T)

Item No	Part No.	Mark	Description		Req'd	Remarks : Serial No.
-	22N58-10521		FORK	ﾌｫｰｸ	2	[LF122/CASCADE] INC.11
A1	214A8-11001		STOPPER-ASSY,FORK	ﾌｫｰｸｽﾄｯﾊﾟｱｯｾﾝ	2	[LFD] INC.2-5
2	214A8-12001		HEAD	ﾍｯﾄﾞ	2	[LFD]
3	214A8-12011		STOPPER	ｽﾄｯﾊﾟ	2	[LFD]
4	214A8-12021		HANDLE	ﾊﾝﾄﾞﾙ	2	[LFD]
5	214A8-12031		SPRING	ｽﾌﾟﾘﾝｸﾞ	2	[LFD]
6	216G8-12921		HOLDER	ﾎﾙﾀﾞ	2	[LF]
7	231A8-12001		PIN	ﾋﾟﾝ	2	[LF]
8	231A8-12011		KNOB	ﾉﾌﾞ	2	[LF]
9	231A8-12021		SPRING	ｽﾌﾟﾘﾝｸﾞ	2	[LF]
10	231A8-12031		PIN,SPRING	ﾋﾟﾝ	2	[LF]
11	W-K2PK-M		KIT,PIN,STOPPER	ｷｯﾄ	2	[CASCADE]
12	216G8-12101		BOLT	ﾎﾞﾙﾄ	4	[LFD]
13	01402-00010		NUT	ﾅｯﾄ	4	[LFD]

FIG.190 LIFT BRACKET [VFM2N4]

(M7020630) ﾘﾌﾄﾌﾞﾗｹｯﾄ

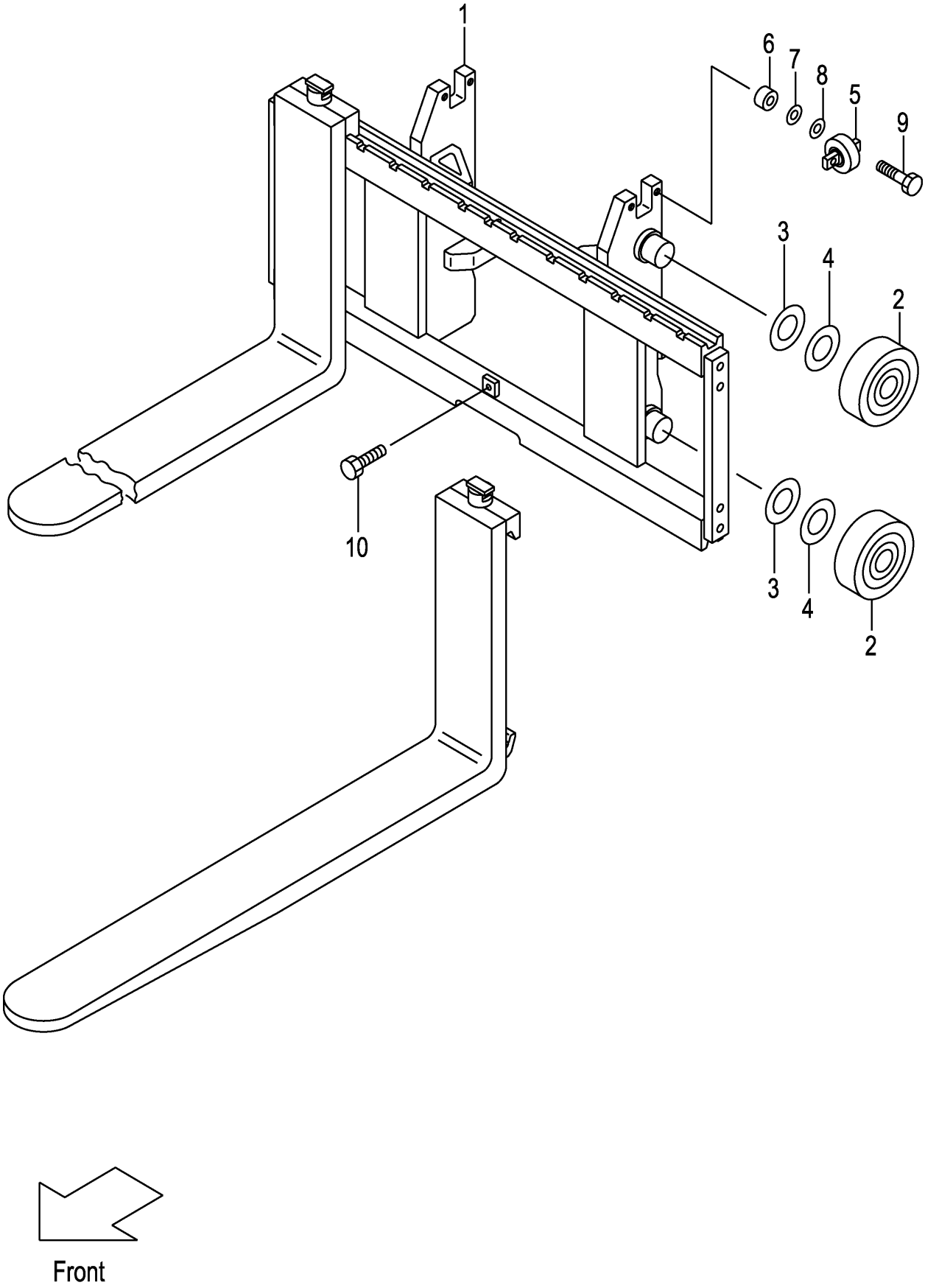

A:VFM2N4(2T)
B:VFM2N4(2.5T)

Item No	Part No.	Mark	Description		Req'd	Remarks : Serial No.
1	239B0-60101		BRACKET,LIFT	ﾌﾞﾗｹｯﾄ	1	
2	277P8-22051		ROLLER,END,119.0	ﾛｰﾗ	4	
-	277P8-22061		ROLLER,END,119.5	ﾛｰﾗ	(4)	
3	277P8-22071		SHIM,T-0.5	ｼﾑ	10	
4	277P8-22081		SHIM,T-1.0	ｼﾑ	10	
5	23458-32052		ROLLER,SIDE,54.0	ﾛｰﾗ	2	
6	22548-34031		SPACER	ｽﾍﾟｰｻ	4	
7	22548-34051		SHIM,T-0.5	ｼﾑ	5	
8	22548-34061		SHIM,T-1.0	ｼﾑ	5	
9	01184-12040		BOLT	ﾎﾞﾙﾄ	4	
10	01184-12025		BOLT	ﾎﾞﾙﾄ	1	
11	514A3-82301	+	CHART,CAPACITY	ﾁｬｰﾄ	1	
12	02432-01008	+	RIVET	ﾘﾍﾞｯﾄ	4	

FIG.191 BACKREST [VFM2N4]

(M70282B0) ﾊﾞｯｸﾚｽﾄ

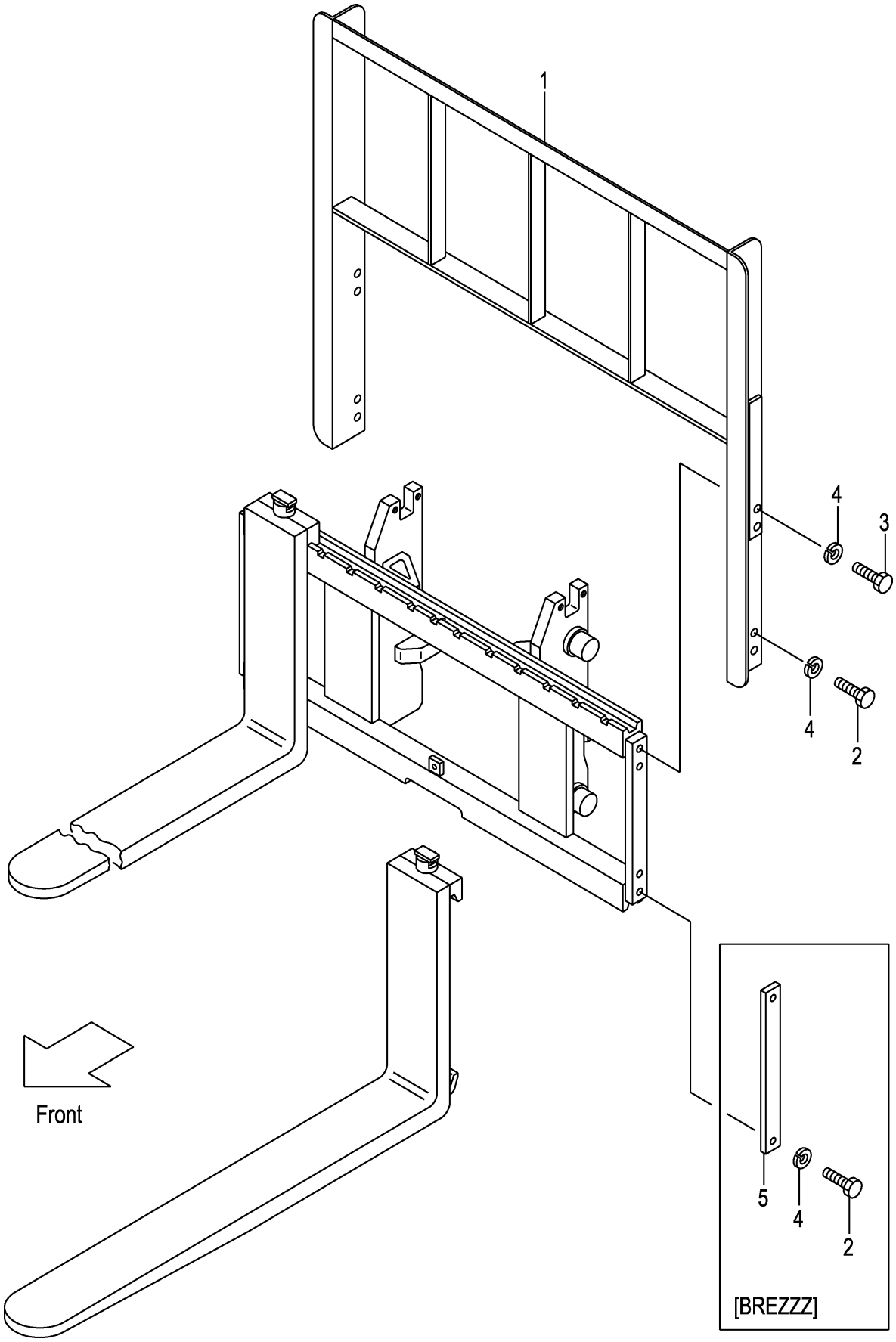

A:VFM2N4(2T)
B:VFM2N4(2.5T)

Item No	Part No.	Mark	Description		Req'd	Remarks : Serial No.
1	234A8-22202		BACKREST	ﾊﾞｯｸﾚｽﾄ	1	
2	01100-14025		BOLT	ﾎﾞﾙﾄ	4	
3	01100-14030		BOLT	ﾎﾞﾙﾄ	4	(WITHOUT BREZZZ)
4	02010-00014		WASHER	ﾜｯｼｬ	8	
-	02010-00014		WASHER	ﾜｯｼｬ	4	[BREZZZ]
5	23659-42161		PLATE,SIDE	ﾌﾟﾚｰﾄ	2	[BREZZZ]

FIG.192 MAST [VFM2N4]

(M7020450) マスト

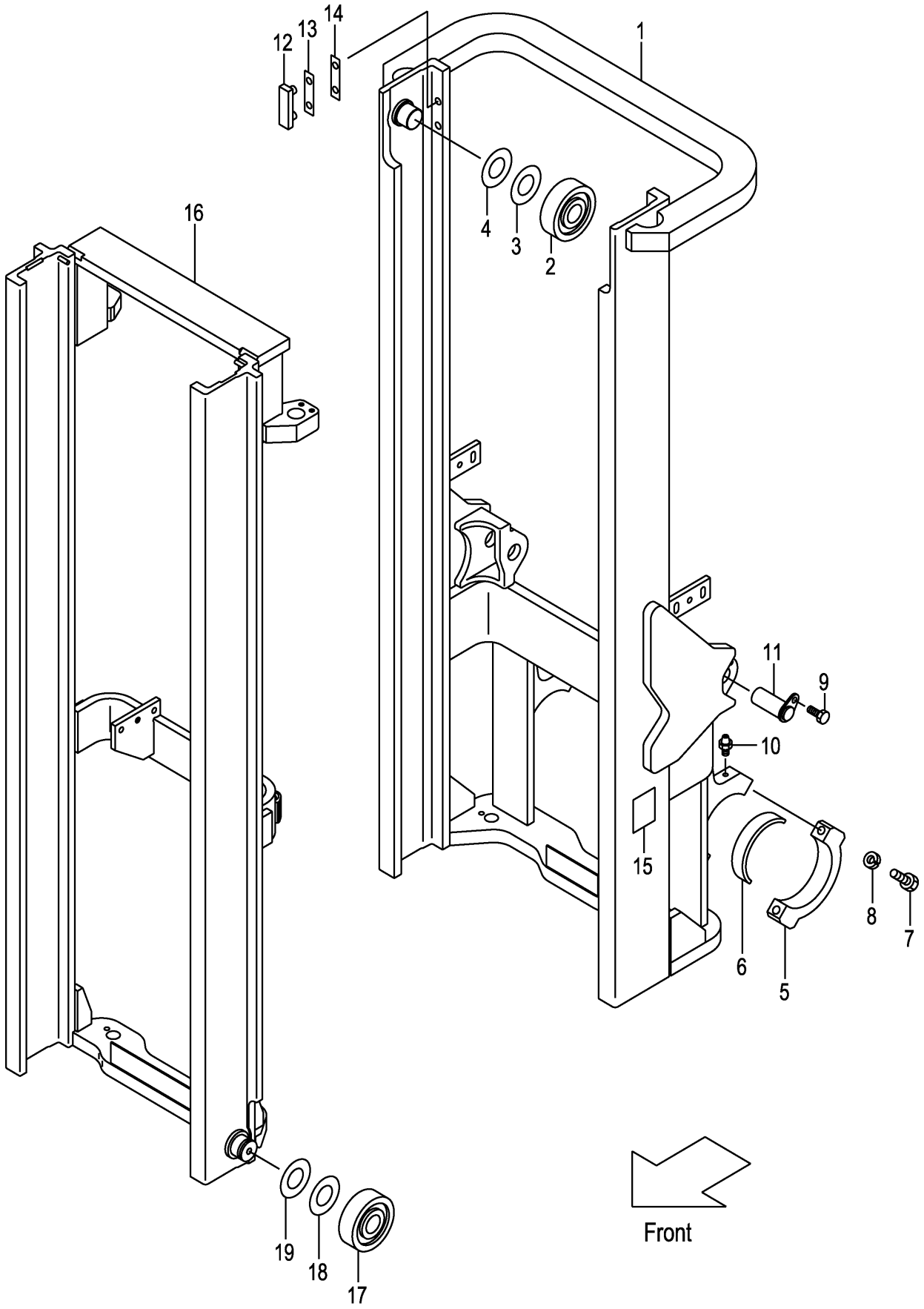

A:VFM2N4(2T)
B:VFM2N4(2.5T)

Item No	Part No.	Mark	Description		Req'd	Remarks : Serial No.
1	22N40-40201		MAST,OUTER VFM300	ｱｳﾀﾏｽﾄ	1	
-	22N40-40211		MAST,OUTER VFM325	ｱｳﾀﾏｽﾄ	1	
-	22N40-40221		MAST,OUTER VFM330	ｱｳﾀﾏｽﾄ	1	
-	22N40-40231		MAST,OUTER VFM350	ｱｳﾀﾏｽﾄ	1	
-	22N40-40241		MAST,OUTER VFM366	ｱｳﾀﾏｽﾄ	1	
-	22N40-40251		MAST,OUTER VFM370	ｱｳﾀﾏｽﾄ	1	
-	22N40-40261		MAST,OUTER VFM375	ｱｳﾀﾏｽﾄ	1	
-	22N40-40271		MAST,OUTER VFM400	ｱｳﾀﾏｽﾄ	1	
-	52N53-91701		MAST,OUTER VFM300	ｱｳﾀﾏｽﾄ	1	[EXR][RW][HC]
-	52N53-91761		MAST,OUTER VFM325	ｱｳﾀﾏｽﾄ	1	[EXR][RW][HC]
-	52N53-91771		MAST,OUTER VFM330	ｱｳﾀﾏｽﾄ	1	[EXR][RW][HC]
-	52N53-91781		MAST,OUTER VFM350	ｱｳﾀﾏｽﾄ	1	[EXR][RW][HC]
-	52N53-91791		MAST,OUTER VFM366	ｱｳﾀﾏｽﾄ	1	[EXR][RW][HC]
-	52N53-91801		MAST,OUTER VFM370	ｱｳﾀﾏｽﾄ	1	[EXR][RW][HC]
-	52N53-91811		MAST,OUTER VFM375	ｱｳﾀﾏｽﾄ	1	[EXR][RW][HC]
-	52N53-91821		MAST,OUTER VFM400	ｱｳﾀﾏｽﾄ	1	[EXR][RW][HC]
2	277P8-22051		ROLLER,END,119.0	ﾛｰﾗ	2	
3	277P8-22071		SHIM,T-0.5	ｼﾑ	12	
4	277P8-22081		SHIM,T-1.0	ｼﾑ	12	
5	277P8-32701		CAP,MAST-SUPPORT	ｷｬｯﾌﾟ	2	
6	214A8-02201		BUSHING	ﾌﾞｯｼﾝｸﾞ	2	
7	01103-16065		BOLT	ﾎﾞﾙﾄ	4	
8	02011-00016		WASHER	ﾜｯｼｬ	4	
9	216G8-52301		BOLT	ﾎﾞﾙﾄ	2	
10	04901-00100		FITTING	ﾌｨｯﾃｨﾝｸﾞ	2	
11	22N58-52501		PIN	ﾋﾟﾝ	2	
12	216G8-33401		SLIPPER	ｽﾘｯﾊﾟ	2	
13	216G8-33361		SHIM,T-0.5	ｼﾑ	8	
14	216G8-33371		SHIM,T-1.0	ｼﾑ	4	
15	23678-06002		PLATE,NAME	ﾌﾟﾚｰﾄ	1	
16	22N40-40401		MAST,INNER VFM300	ｲﾝﾅﾏｽﾄ	1	
-	22N40-40411		MAST,INNER VFM325	ｲﾝﾅﾏｽﾄ	1	
-	22N40-40421		MAST,INNER VFM330	ｲﾝﾅﾏｽﾄ	1	
-	22N40-40431		MAST,INNER VFM350	ｲﾝﾅﾏｽﾄ	1	
-	22N40-40441		MAST,INNER VFM366	ｲﾝﾅﾏｽﾄ	1	
-	22N40-40451		MAST,INNER VFM370	ｲﾝﾅﾏｽﾄ	1	
-	22N40-40461		MAST,INNER VFM375	ｲﾝﾅﾏｽﾄ	1	
-	22N40-40471		MAST,INNER VFM400	ｲﾝﾅﾏｽﾄ	1	
17	277P8-22051		ROLLER,END,119.0	ﾛｰﾗ	2	
-	277P8-22061		ROLLER,END,119.5	ﾛｰﾗ	(2)	
18	277P8-22071		SHIM,T-0.5	ｼﾑ	12	
19	277P8-22081		SHIM,T-1.0	ｼﾑ	12	

FIG.193 LIFT CYLINDER(FRONT)[VFM2N4]

(M7020570) ﾘﾌﾄｼﾘﾝﾀﾞ(ﾌﾛﾝﾄ)

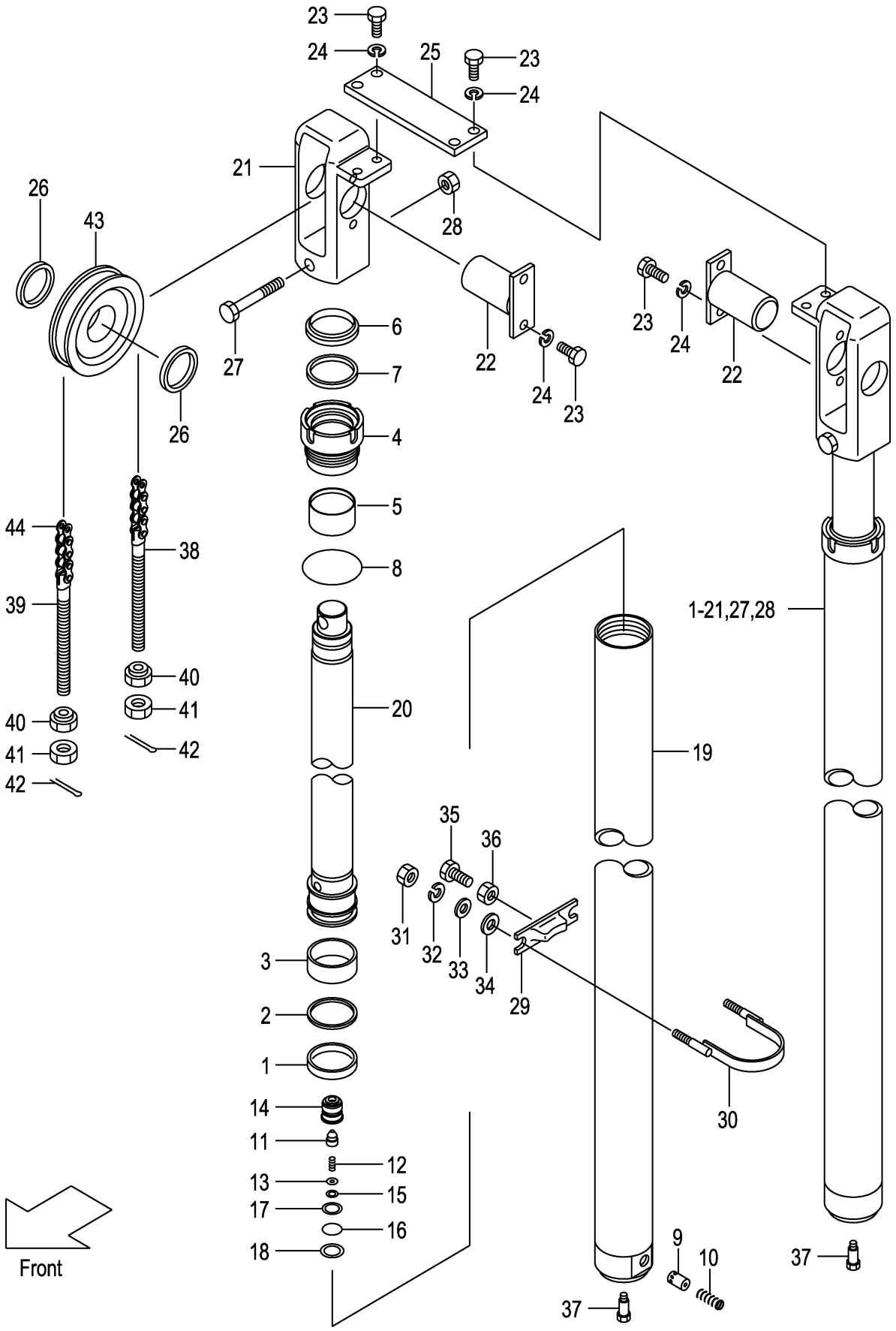

A:VFM2N4(2T)
B:VFM2N4(2.5T)

Item No	Part No.	Mark	Description		Req'd	Remarks : Serial No.
A1	22N40-50201		CYL-ASSY,LIFT VFM300	ﾘﾌﾄｼﾘﾝﾀﾞｱｯｾﾝ	2	INC.1-20
-	22N40-50211		CYL-ASSY,LIFT VFM325	ﾘﾌﾄｼﾘﾝﾀﾞｱｯｾﾝ	2	INC.1-20
-	22N40-50221		CYL-ASSY,LIFT VFM330	ﾘﾌﾄｼﾘﾝﾀﾞｱｯｾﾝ	2	INC.1-20
-	22N40-50231		CYL-ASSY,LIFT VFM350	ﾘﾌﾄｼﾘﾝﾀﾞｱｯｾﾝ	2	INC.1-20
-	22N40-50241		CYL-ASSY,LIFT VFM366	ﾘﾌﾄｼﾘﾝﾀﾞｱｯｾﾝ	2	INC.1-20
-	22N40-50251		CYL-ASSY,LIFT VFM370	ﾘﾌﾄｼﾘﾝﾀﾞｱｯｾﾝ	2	INC.1-20
-	22N40-50261		CYL-ASSY,LIFT VFM375	ﾘﾌﾄｼﾘﾝﾀﾞｱｯｾﾝ	2	INC.1-20
-	22N40-50271		CYL-ASSY,LIFT VFM400	ﾘﾌﾄｼﾘﾝﾀﾞｱｯｾﾝ	2	INC.1-20
1	27978-42411		PACKING	ﾊﾟｯｷﾝｸﾞ	2	
2	24459-42291		RING,BACK-UP	ﾘﾝｸﾞ	2	
3	27978-42421		WEARING	ｳｴｱﾘﾝｸﾞ	2	
4	232L8-42601		CAP,CYL	ｷｬｯﾌﾟ	2	
5	232L8-42621		BUSHING	ﾌﾞｯｼﾝｸﾞ	2	
6	214J8-46001		SEAL,DUST	ｼｰﾙ	2	
7	214J8-42721		PACKING	ﾊﾟｯｷﾝｸﾞ	2	
8	232L8-42631		O-RING	Oﾘﾝｸﾞ	2	
9	24320-55001		PISTON	ﾋﾟｽﾄﾝ	2	
10	27978-42601		SPRING	ｽﾌﾟﾘﾝｸﾞ	2	
A2	214T0-83501		VALVE-ASSY,CHECK	ﾁｪｯｸﾊﾞﾙﾌﾞｱｯｾﾝ	2	INC.11-15
11	214T0-83521		POPPET	ﾎﾟﾍﾟｯﾄ	2	
12	214T0-83541		SPRING	ｽﾌﾟﾘﾝｸﾞ	2	
13	214T0-83531		PLATE	ﾌﾟﾚｰﾄ	2	
14	214T0-83511		CASE	ｹｰｽ	2	
15	02110-00014		RING,SNAP	ﾘﾝｸﾞ	2	
16	03320-00210		O-RING	Oﾘﾝｸﾞ	2	
17	03360-00210		RING,BACK-UP	ﾘﾝｸﾞ	2	
18	02110-00028		RING,SNAP	ﾘﾝｸﾞ	2	
19	22N40-50601		BODY,CYL VFM300	ﾎﾞﾃﾞｨ	2	
-	22N40-50611		BODY,CYL VFM325	ﾎﾞﾃﾞｨ	2	
-	22N40-50621		BODY,CYL VFM330	ﾎﾞﾃﾞｨ	2	
-	22N40-50631		BODY,CYL VFM350	ﾎﾞﾃﾞｨ	2	
-	22N40-50641		BODY,CYL VFM366	ﾎﾞﾃﾞｨ	2	
-	22N40-50651		BODY,CYL VFM370	ﾎﾞﾃﾞｨ	2	
-	22N40-50661		BODY,CYL VFM375	ﾎﾞﾃﾞｨ	2	
-	22N40-50671		BODY,CYL VFM400	ﾎﾞﾃﾞｨ	2	
20	22N40-50401		ROD,PISTON VFM300	ﾛｯﾄﾞ	2	
-	22N40-50411		ROD,PISTON VFM325	ﾛｯﾄﾞ	2	
-	22N40-50421		ROD,PISTON VFM330	ﾛｯﾄﾞ	2	
-	22N40-50431		ROD,PISTON VFM350	ﾛｯﾄﾞ	2	
-	22N40-50441		ROD,PISTON VFM366	ﾛｯﾄﾞ	2	
-	22N40-50451		ROD,PISTON VFM370	ﾛｯﾄﾞ	2	
-	22N40-50461		ROD,PISTON VFM375	ﾛｯﾄﾞ	2	
-	22N40-50471		ROD,PISTON VFM400	ﾛｯﾄﾞ	2	
21	22N40-74301		HEAD,PISTON	ﾍｯﾄﾞ	2	
22	22N40-74501		PIN,ANCHOR	ﾋﾟﾝ	2	
23	01103-10020		BOLT	ﾎﾞﾙﾄ	8	
24	02011-00010		WASHER	ﾜｯｼｬ	8	
25	22N40-74311		PLATE	ﾌﾟﾚｰﾄ	1	
26	229G0-52251		SPACER	ｽﾍﾟｰｻ	4	
27	01100-12080		BOLT	ﾎﾞﾙﾄ	2	

FIG.193 LIFT CYLINDER(FRONT)[VFM2N4]

(M7020570) ﾘﾌﾄｼﾘﾝﾀﾞ(ﾌﾛﾝﾄ)

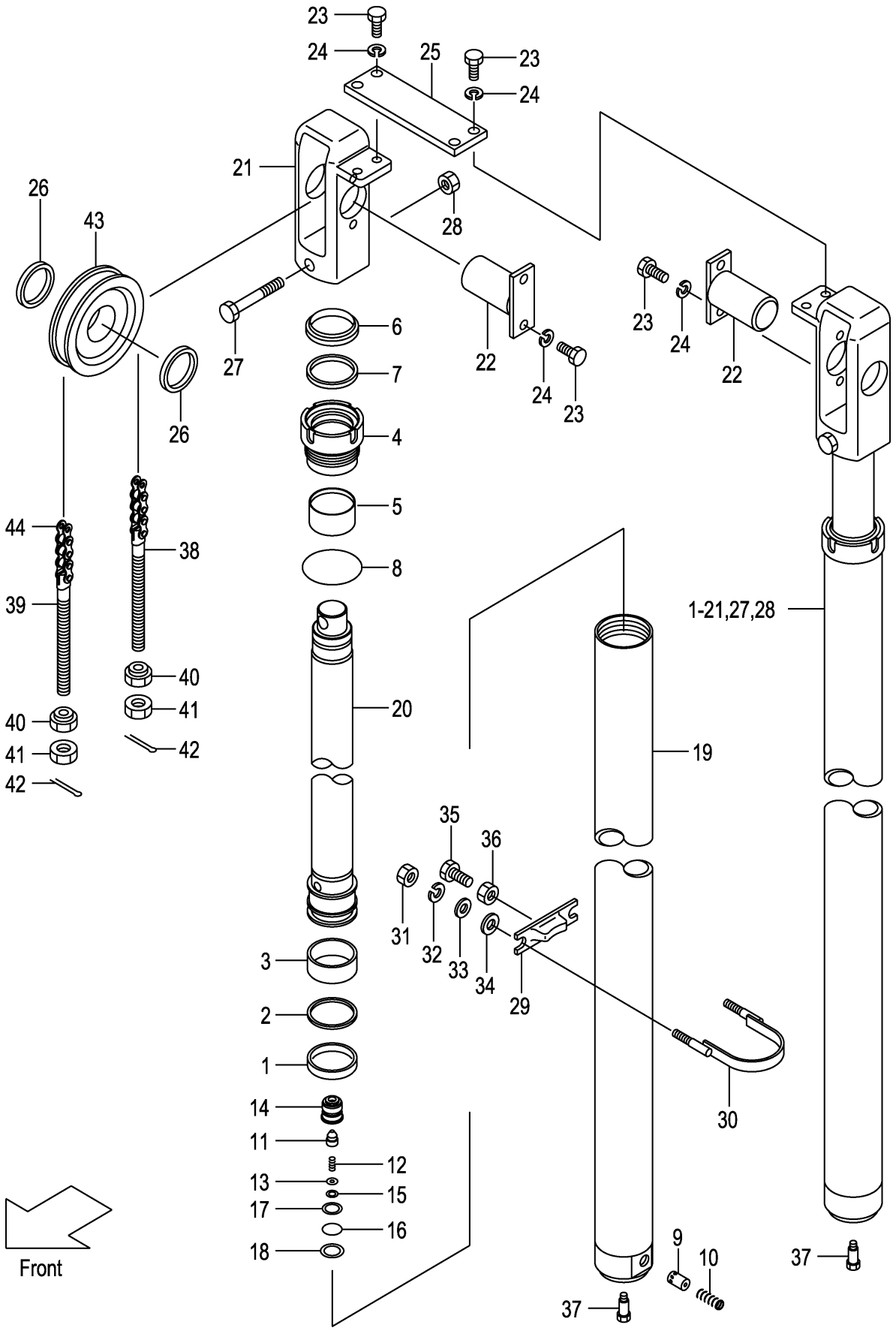

A:VFM2N4(2T)
B:VFM2N4(2.5T)

Item No	Part No.	Mark	Description		Req'd	Remarks : Serial No.
28	01402-00012		NUT	ﾅｯﾄ	2	
29	22N58-43011		SUPPORT,CYL	ｻﾎﾟｰﾄ	2	
30	22N40-72311		U-BOLT	Uﾎﾞﾙﾄ	2	
31	278R0-63151		NUT	ﾅｯﾄ	4	
32	02010-00008		WASHER	ﾜｯｼｬ	4	
33	02000-00008		WASHER	ﾜｯｼｬ	4	
34	02000-00010		WASHER	ﾜｯｼｬ	4	
35	232A8-42201		BOLT	ﾎﾞﾙﾄ	2	
36	234A8-42571		NUT	ﾅｯﾄ	2	
37	214A8-42661		BOLT	ﾎﾞﾙﾄ	2	
38	52672-72231		PIN,ANCHOR	ﾋﾟﾝ	2	
39	23679-45801		PIN,ANCHOR	ﾋﾟﾝ	2	
40	22218-40191		NUT	ﾅｯﾄ	4	
41	01400-00018		NUT	ﾅｯﾄ	4	
42	02200-03030		PIN	ﾋﾟﾝ	4	
43	234A8-43501		SHEAVE	ｼｰﾌﾞ	2	
44	22679-45671		CHAIN,LEAF VFM300	ﾁｪｰﾝ	2	
-	22679-45731		CHAIN,LEAF VFM325	ﾁｪｰﾝ	2	
-	22679-45751		CHAIN,LEAF VFM330	ﾁｪｰﾝ	2	
-	22679-45811		CHAIN,LEAF VFM350	ﾁｪｰﾝ	2	
-	22679-45851		CHAIN,LEAF VFM366	ﾁｪｰﾝ	2	
-	22679-45851		CHAIN,LEAF VFM370	ﾁｪｰﾝ	2	
-	22679-45871		CHAIN,LEAF VFM375	ﾁｪｰﾝ	2	
-	22679-45951		CHAIN,LEAF VFM400	ﾁｪｰﾝ	2	

FIG.194 LIFT CYLINDER (REAR)[VFM2N4]

(M7020580) リフトシリンダ(リヤー)

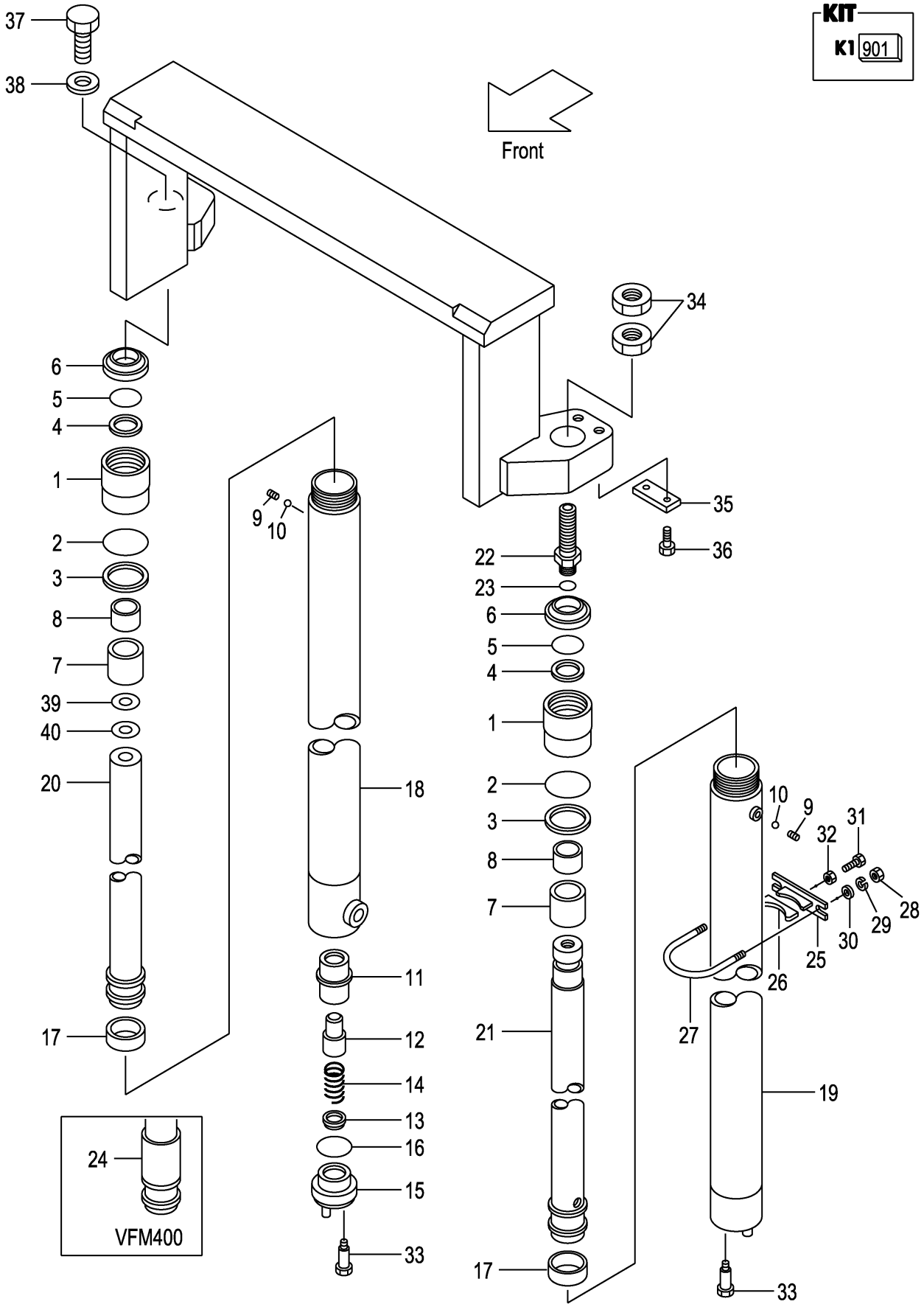

A:VFM2N4(2T)
B:VFM2N4(2.5T)

Item No	Part No.	Mark	Description		Req'd	Remarks : Serial No.
A1	234B0-50301		CYL-ASSY,LIFT,RH VFM300	ﾘﾌﾄｼﾘﾝﾀﾞｱｯｾﾝ	1	INC.1-18,20
-	234B0-50311		CYL-ASSY,LIFT,RH VFM325	ﾘﾌﾄｼﾘﾝﾀﾞｱｯｾﾝ	1	INC.1-18,20
-	234B0-50321		CYL-ASSY,LIFT,RH VFM330	ﾘﾌﾄｼﾘﾝﾀﾞｱｯｾﾝ	1	INC.1-18,20
-	234B0-50331		CYL-ASSY,LIFT,RH VFM350	ﾘﾌﾄｼﾘﾝﾀﾞｱｯｾﾝ	1	INC.1-18,20
-	234B0-50341		CYL-ASSY,LIFT,RH VFM366	ﾘﾌﾄｼﾘﾝﾀﾞｱｯｾﾝ	1	INC.1-18,20
-	234B0-50351		CYL-ASSY,LIFT,RH VFM370	ﾘﾌﾄｼﾘﾝﾀﾞｱｯｾﾝ	1	INC.1-18,20
-	234B0-50361		CYL-ASSY,LIFT,RH VFM375	ﾘﾌﾄｼﾘﾝﾀﾞｱｯｾﾝ	1	INC.1-18,20
-	234B0-50371		CYL-ASSY,LIFT,RH VFM400	ﾘﾌﾄｼﾘﾝﾀﾞｱｯｾﾝ	1	INC.1-18,20,24
A2	234B0-50401		CYL-ASSY,LIFT,LH VFM300	ﾘﾌﾄｼﾘﾝﾀﾞｱｯｾﾝ	1	INC.1-10,17,19,21-23
-	234B0-50411		CYL-ASSY,LIFT,LH VFM325	ﾘﾌﾄｼﾘﾝﾀﾞｱｯｾﾝ	1	INC.1-10,17,19,21-23
-	234B0-50421		CYL-ASSY,LIFT,LH VFM330	ﾘﾌﾄｼﾘﾝﾀﾞｱｯｾﾝ	1	INC.1-10,17,19,21-23
-	234B0-50431		CYL-ASSY,LIFT,LH VFM350	ﾘﾌﾄｼﾘﾝﾀﾞｱｯｾﾝ	1	INC.1-10,17,19,21-23
-	234B0-50441		CYL-ASSY,LIFT,LH VFM366	ﾘﾌﾄｼﾘﾝﾀﾞｱｯｾﾝ	1	INC.1-10,17,19,21-23
-	234B0-50451		CYL-ASSY,LIFT,LH VFM370	ﾘﾌﾄｼﾘﾝﾀﾞｱｯｾﾝ	1	INC.1-10,17,19,21-23
-	234B0-50461		CYL-ASSY,LIFT,LH VFM375	ﾘﾌﾄｼﾘﾝﾀﾞｱｯｾﾝ	1	INC.1-10,17,19,21-23
-	234B0-50471		CYL-ASSY,LIFT,LH VFM400	ﾘﾌﾄｼﾘﾝﾀﾞｱｯｾﾝ	1	INC.1-10,17,19,21-24
901	214A0-59821	K1	KIT,OVERHAUL	ｵｰﾊﾞﾎｰﾙｷｯﾄ	2	INC.2-6,16,17,23
1	234A0-52501		CAP	ｷｬｯﾌﾟ	2	
2	210F8-42631	*	O-RING	Oﾘﾝｸﾞ	2	
3	214A0-53681	*	RING,BACK-UP	ﾘﾝｸﾞ	2	
4	23650-52851	*	PACKING	ﾊﾟｯｷﾝｸﾞ	2	
5	23650-52861	*	RING,BACK-UP	ﾘﾝｸﾞ	2	
6	27410-53111	*	SEAL	ｼｰﾙ	2	
7	234A0-52511		SLEEVE	ｽﾘｰﾌﾞ	2	
8	23650-52841		BUSHING	ﾌﾞｯｼﾝｸﾞ	2	
9	234A0-52611		PLUG	ﾌﾟﾗｸﾞ	2	
10	03190-00006		BALL	ﾎﾞｰﾙ	2	
11	53658-43021		SLEEVE	ｽﾘｰﾌﾞ	1	(RH)
12	53658-43011		PISTON	ﾋﾟｽﾄﾝ	1	(RH)
13	53658-43001		CHECK	ﾁｪｯｸ	1	(RH)
14	53658-43031		SPRING	ｽﾌﾟﾘﾝｸﾞ	1	(RH)
15	53658-43041		PLUG	ﾌﾟﾗｸﾞ	1	(RH)
16	03320-00340	*	O-RING	Oﾘﾝｸﾞ	1	(RH)
17	22580-53321	*	WEARING	ｳｴｱﾘﾝｸﾞ	2	

FIG.194 LIFT CYLINDER (REAR)[VFM2N4]

(M7020580) リフトシリンダ(リヤー)

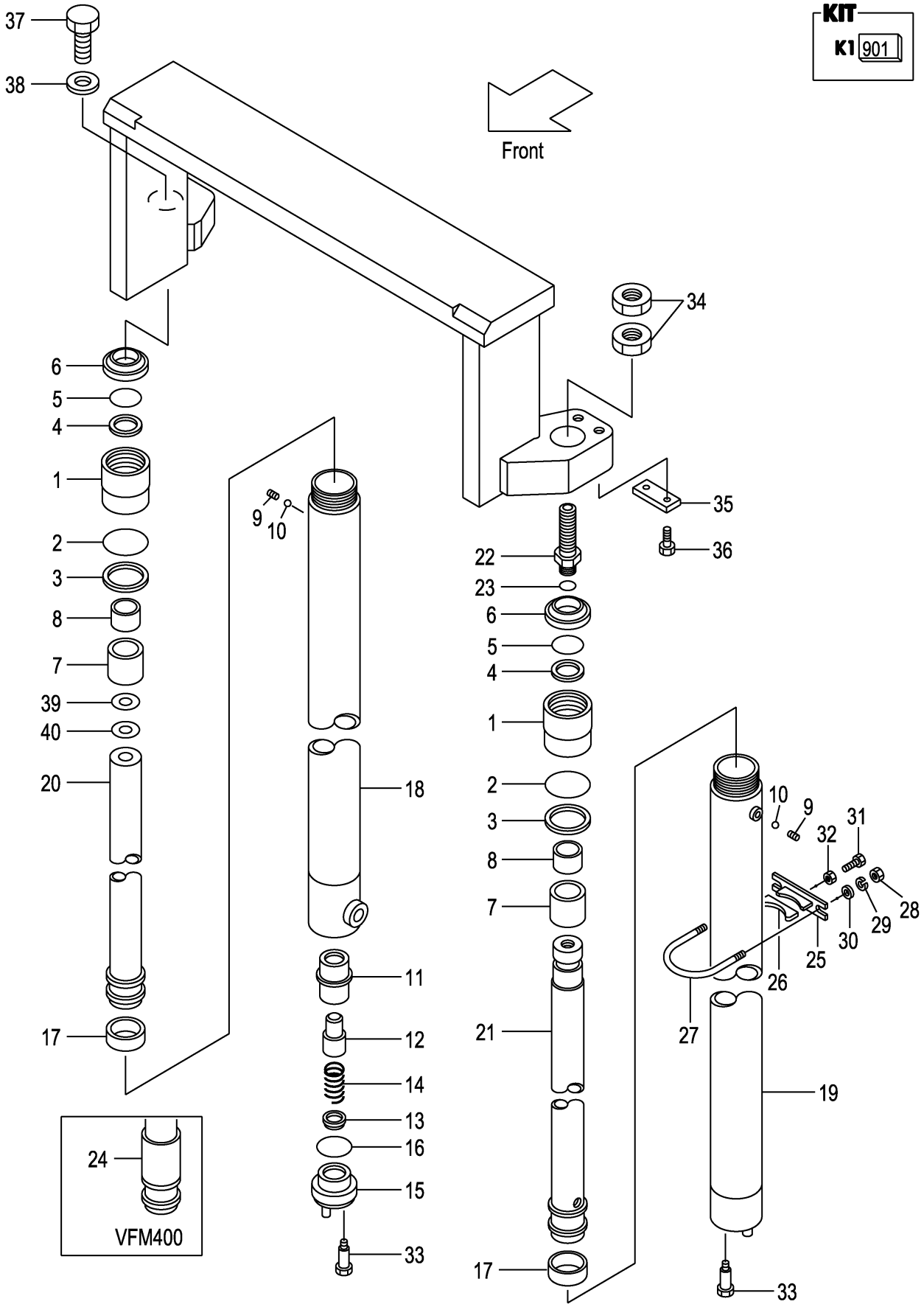

A:VFM2N4(2T)
B:VFM2N4(2.5T)

Item No	Part No.	Mark	Description		Req'd	Remarks : Serial No.
18	234B0-50501		BODY,CYL,RH VFM300	ﾎﾞﾃﾞｨ	1	
-	234B0-50511		BODY,CYL,RH VFM325	ﾎﾞﾃﾞｨ	1	
-	234B0-50521		BODY,CYL,RH VFM330	ﾎﾞﾃﾞｨ	1	
-	234B0-50531		BODY,CYL,RH VFM350	ﾎﾞﾃﾞｨ	1	
-	234B0-50541		BODY,CYL,RH VFM366	ﾎﾞﾃﾞｨ	1	
-	234B0-50551		BODY,CYL,RH VFM370	ﾎﾞﾃﾞｨ	1	
-	234B0-50561		BODY,CYL,RH VFM375	ﾎﾞﾃﾞｨ	1	
-	234B0-50571		BODY,CYL,RH VFM400	ﾎﾞﾃﾞｨ	1	
19	234B0-50601		BODY,CYL,LH VFM300	ﾎﾞﾃﾞｨ	1	
-	234B0-50611		BODY,CYL,LH VFM325	ﾎﾞﾃﾞｨ	1	
-	234B0-50621		BODY,CYL,LH VFM330	ﾎﾞﾃﾞｨ	1	
-	234B0-50631		BODY,CYL,LH VFM350	ﾎﾞﾃﾞｨ	1	
-	234B0-50641		BODY,CYL,LH VFM366	ﾎﾞﾃﾞｨ	1	
-	234B0-50651		BODY,CYL,LH VFM370	ﾎﾞﾃﾞｨ	1	
-	234B0-50661		BODY,CYL,LH VFM375	ﾎﾞﾃﾞｨ	1	
-	234B0-50671		BODY,CYL,LH VFM400	ﾎﾞﾃﾞｨ	1	
20	229G0-50701		ROD,PISTON,RH VFM300	ﾛｯﾄﾞ	1	
-	229G0-50711		ROD,PISTON,RH VFM325	ﾛｯﾄﾞ	1	
-	229G0-50721		ROD,PISTON,RH VFM330	ﾛｯﾄﾞ	1	
-	229G0-50731		ROD,PISTON,RH VFM350	ﾛｯﾄﾞ	1	
-	229F0-51311		ROD,PISTON,RH VFM366	ﾛｯﾄﾞ	1	
-	229G0-50751		ROD,PISTON,RH VFM370	ﾛｯﾄﾞ	1	
-	229G0-50761		ROD,PISTON,RH VFM375	ﾛｯﾄﾞ	1	
-	229G0-50771		ROD,PISTON,RH VFM400	ﾛｯﾄﾞ	1	
21	229G0-50801		ROD,PISTON,LH VFM300	ﾛｯﾄﾞ	1	
-	229G0-50811		ROD,PISTON,LH VFM325	ﾛｯﾄﾞ	1	
-	229G0-50821		ROD,PISTON,LH VFM330	ﾛｯﾄﾞ	1	
-	229G0-50831		ROD,PISTON,LH VFM350	ﾛｯﾄﾞ	1	
-	214A0-51811		ROD,PISTON,LH VFM366	ﾛｯﾄﾞ	1	
-	229G0-50851		ROD,PISTON,LH VFM370	ﾛｯﾄﾞ	1	
-	229G0-50861		ROD,PISTON,LH VFM375	ﾛｯﾄﾞ	1	
-	229G0-50871		ROD,PISTON,LH VFM400	ﾛｯﾄﾞ	1	
22	214A0-53721		NIPPLE	ﾆｯﾌﾟﾙ	1	(LH)
23	03320-00180	*	O-RING	Oﾘﾝｸﾞ	1	(LH)
24	214A0-53901		SPACER VFM400	ｽﾍﾟｰｻ	2	
A3	215E8-42171		SUPPORT-ASSY	ｻﾎﾟｰﾄｱｯｾﾝ	2	INC.25,26
25	215E8-42181		SUPPORT	ｻﾎﾟｰﾄ	2	
26	24868-42111		RUBBER	ﾗﾊﾞｰ	2	
27	234A8-42551		U-BOLT	Uﾎﾞﾙﾄ	2	
28	234A8-42561		NUT	ﾅｯﾄ	4	
29	02010-20010		WASHER	ﾜｯｼｬ	4	
30	02000-20010		WASHER	ﾜｯｼｬ	4	
31	232A8-42201		BOLT	ﾎﾞﾙﾄ	2	
32	234A8-42571		NUT	ﾅｯﾄ	2	
33	214A8-42661		BOLT	ﾎﾞﾙﾄ	2	
34	24320-52001		NUT	ﾅｯﾄ	2	(LH)
35	23648-50161		PLATE	ﾌﾟﾚｰﾄ	1	(LH)
36	01184-10020		BOLT	ﾎﾞﾙﾄ	2	(LH)
37	01103-14040		BOLT	ﾎﾞﾙﾄ	1	(RH)
38	02011-00014		WASHER	ﾜｯｼｬ	1	(RH)

FIG.194 LIFT CYLINDER (REAR)[VFM2N4]

(M7020580) リフトシリンダ(リヤー)

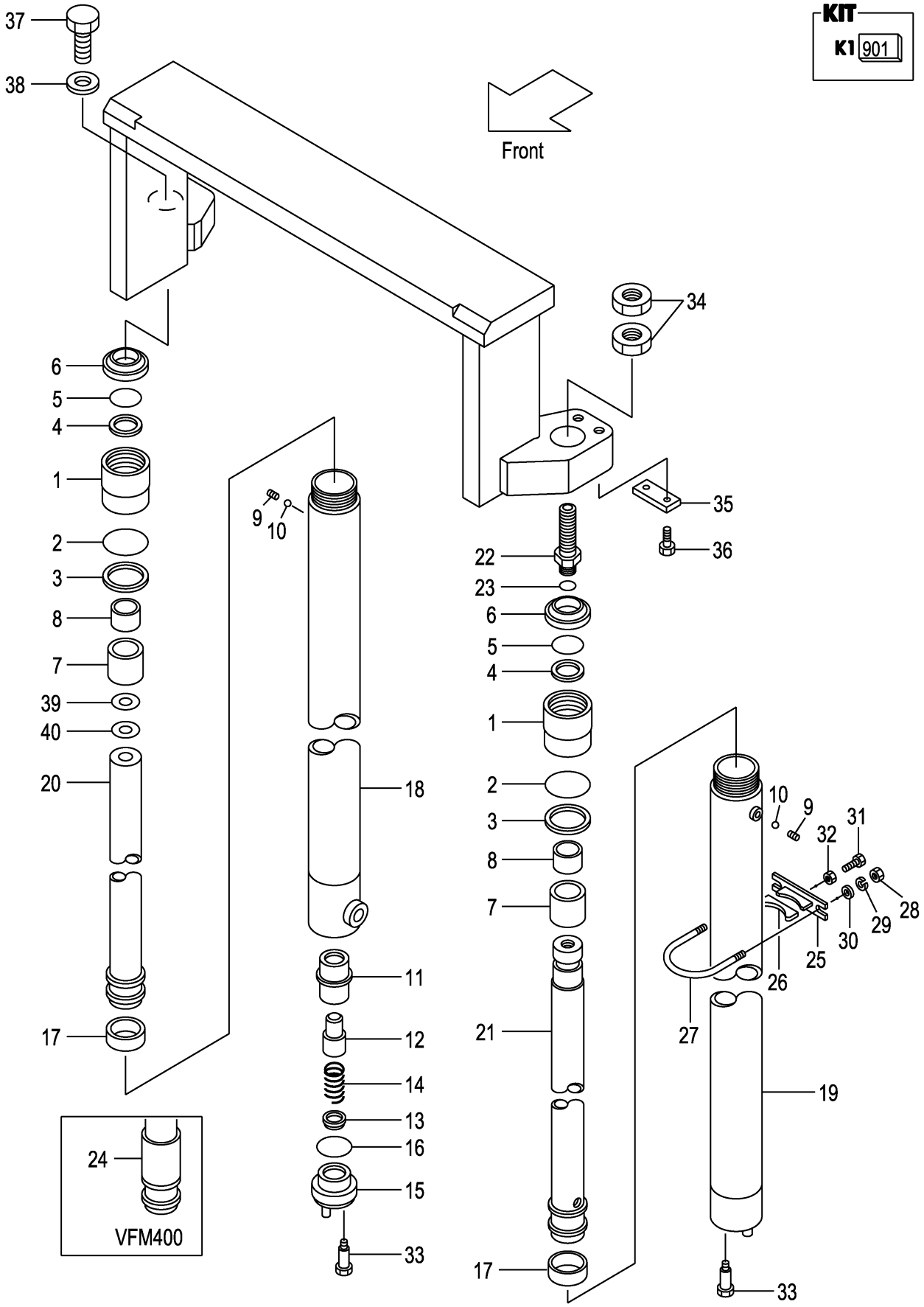

A:VFM2N4(2T)
B:VFM2N4(2.5T)

Item No	Part No.	Mark	Description	Req'd	Remarks : Serial No.
39	23917-42191		SHIM,T-1.0 シム	5	(RH)
40	22679-43831		SHIM,T-0.2 シム	5	(RH)

FIG.195 MAST PIPING [VFM2N4]

(M7020590) マストパイピング

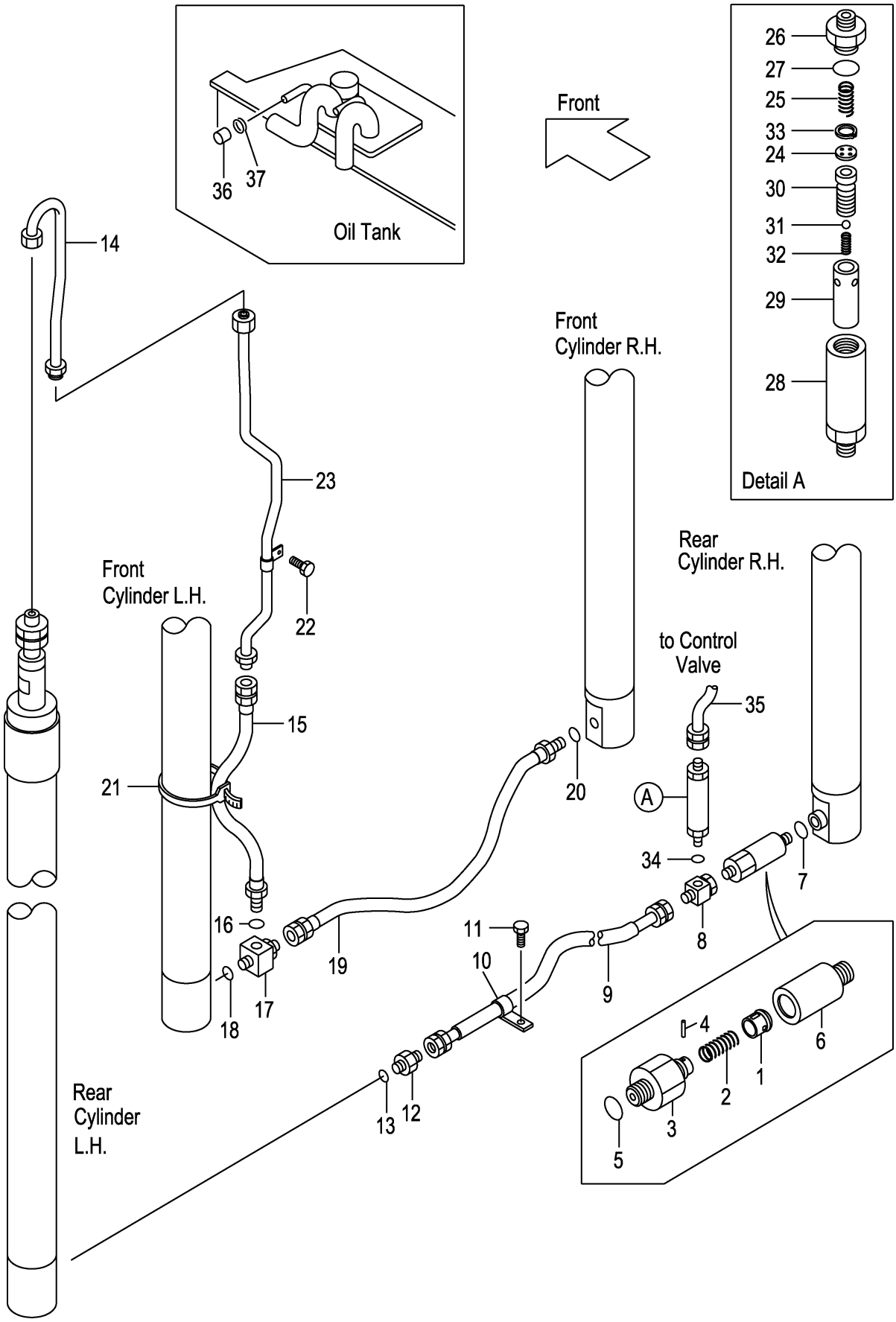

A:VFM2N4(2T)
B:VFM2N4(2.5T)

Item No	Part No.	Mark	Description		Req'd	Remarks : Serial No.
A1	234A0-62051		VALVE-ASSY,CUT	ｶｯﾄﾊﾞﾙﾌﾞｱｯｾﾝ	1	INC.1-7
A2	234A8-40701		SUB-ASSY,VALVE,CUT	ｶｯﾄﾊﾞﾙﾌﾞｻﾌﾞｱｯｾﾝ	1	INC.1-5
1	234A8-42602		PISTON	ﾋﾟｽﾄﾝ	1	
2	234A8-42611		SPRING	ｽﾌﾟﾘﾝｸﾞ	1	
3	234A8-42622		NIPPLE	ﾆｯﾌﾟﾙ	1	
4	02270-01014		PIN	ﾋﾟﾝ	1	
5	03320-00140		O-RING	Oﾘﾝｸﾞ	1	
6	234A0-62111		ADAPTER	ｱﾀﾞﾌﾟﾀ	1	
7	03320-00140		O-RING	Oﾘﾝｸﾞ	1	
8	234A0-62101		THREE-WAY	ｽﾘｰｳｴｲ	1	
9	229G0-62401		HOSE	ﾎｰｽ	1	
10	214A8-43081		CLIP	ｸﾘｯﾌﾟ	1	
11	01184-10020		BOLT	ﾎﾞﾙﾄ	1	
A3	234B0-62101		NIPPLE-ASSY	ﾆｯﾌﾟﾙｱｯｾﾝ	1	INC.12,13
12	NO PART NO.	#	NIPPLE	ﾆｯﾌﾟﾙ	1	
13	03320-00140		O-RING	Oﾘﾝｸﾞ	1	
14	229G0-62601		PIPE	ﾊﾟｲﾌﾟ	1	
15	234B0-62211		HOSE	ﾎｰｽ	1	
16	03320-00180		O-RING	Oﾘﾝｸﾞ	1	
A4	23659-44602		THREE-WAY-ASSY	ｽﾘｰｳｪｲｱｯｾﾝ	1	INC.17,18
17	NO PART NO.	#	THREE-WAY	ｽﾘｰｳｴｲ	1	
18	03320-00180		O-RING	Oﾘﾝｸﾞ	1	
19	22N40-62061		HOSE	ﾎｰｽ	1	
20	03320-00180		O-RING	Oﾘﾝｸﾞ	1	
21	04913-21380		BAND	ﾊﾞﾝﾄﾞ	1	
22	01183-06016		BOLT	ﾎﾞﾙﾄ	1	
23	229G0-60401		PIPE VFM300	ﾊﾟｲﾌﾟ	1	
-	229G0-60411		PIPE VFM325	ﾊﾟｲﾌﾟ	1	
-	229G0-60421		PIPE VFM330	ﾊﾟｲﾌﾟ	1	
-	229G0-60431		PIPE VFM350	ﾊﾟｲﾌﾟ	1	
-	229G0-60441		PIPE VFM366	ﾊﾟｲﾌﾟ	1	
-	229G0-60451		PIPE VFM370	ﾊﾟｲﾌﾟ	1	
-	229G0-60461		PIPE VFM375	ﾊﾟｲﾌﾟ	1	
-	229G0-60471		PIPE VFM400	ﾊﾟｲﾌﾟ	1	
A5	234A8-41001		REGULATOR-ASSY,FLOW	ﾌﾛｰﾚｷﾞｭﾚｰﾀｱｯｾﾝ	1	INC.24-33
24	NO PART NO.	#	PLATE	ﾌﾟﾚｰﾄ	1	
25	27979-43101		SPRING	ｽﾌﾟﾘﾝｸﾞ	1	
26	NO PART NO.	#	NIPPLE	ﾆｯﾌﾟﾙ	1	
27	03320-00280		O-RING	Oﾘﾝｸﾞ	1	
28	NO PART NO.	#	CASE	ｹｰｽ	1	
29	NO PART NO.	#	SLEEVE	ｽﾘｰﾌﾞ	1	
30	NO PART NO.	#	PISTON	ﾋﾟｽﾄﾝ	1	
31	24459-42951		BALL	ﾎﾞｰﾙ	1	
32	214A8-44151		SPRING	ｽﾌﾟﾘﾝｸﾞ	1	
33	02110-00018		RING,SNAP	ﾘﾝｸﾞ	1	
34	03320-00180		O-RING	Oﾘﾝｸﾞ	1	
35	234A8-02101		HOSE	ﾎｰｽ	1	
36	55593-62551		CAP	ｷｬｯﾌﾟ	1	
37	04914-00019		CLIP	ｸﾘｯﾌﾟ	1	

FIG.196 FORK [VFHM2N5]

(M7028160) フォーク

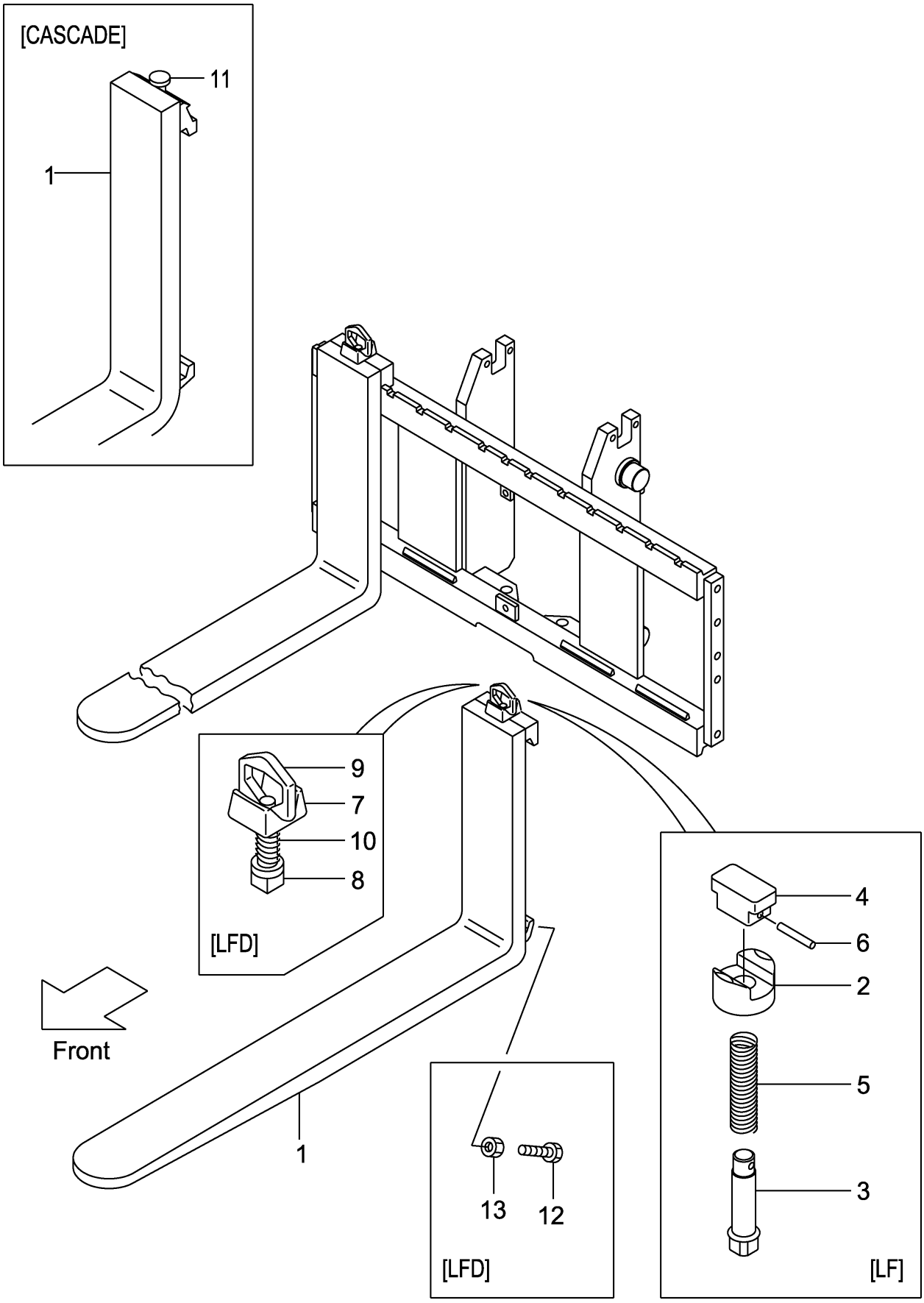

A:VFHM2N5(2T)
B:VFHM2N5(2.5T)

Item No	Part No.	Mark	Description		Req'd	Remarks : Serial No.
1	231A8-10101		FORK	ﾌｫｰｸ	2	A
						(L=920) INC.2-6
-	214A8-10512		FORK	ﾌｫｰｸ	2	B
						(L=1070) INC.2-6
-	231A8-10171		FORK	ﾌｫｰｸ	2	A
						[LF090] INC.2-6
-	231F8-10571		FORK	ﾌｫｰｸ	2	B
						[LF090] INC.2-6
-	231A8-10101		FORK	ﾌｫｰｸ	2	A
						[LF092] INC.2-6
-	231F8-10501		FORK	ﾌｫｰｸ	2	B
						[LF092] INC.2-6
-	214A8-10582		FORK	ﾌｫｰｸ	2	[LF100] INC.2-6
-	214A8-10512		FORK	ﾌｫｰｸ	2	[EX][LF107] INC.2-6
-	214A8-10592		FORK	ﾌｫｰｸ	2	[LF110] INC.2-6
-	214A8-10602		FORK	ﾌｫｰｸ	2	[LF120] INC.2-6
-	214A8-10522		FORK	ﾌｫｰｸ	2	[LF122] INC.2-6
-	214A8-10612		FORK	ﾌｫｰｸ	2	[LF130] INC.2-6
-	214A8-10532		FORK	ﾌｫｰｸ	2	[LF137] INC.2-6
-	214A8-10622		FORK	ﾌｫｰｸ	2	[LF140] INC.2-6
-	214A8-10632		FORK	ﾌｫｰｸ	2	[LF150] INC.2-6
-	214A8-10542		FORK	ﾌｫｰｸ	2	[LF152] INC.2-6
-	214A8-10642		FORK	ﾌｫｰｸ	2	[LF160] INC.2-6
-	214A8-10552		FORK	ﾌｫｰｸ	2	[LF167] INC.2-6
-	214A8-10653		FORK	ﾌｫｰｸ	2	[LF170] INC.2-6
-	214A8-10663		FORK	ﾌｫｰｸ	2	[LF180] INC.2-6
-	214A8-10563		FORK	ﾌｫｰｸ	2	[LF182] INC.2-6
-	214A8-10673		FORK	ﾌｫｰｸ	2	[LF190] INC.2-6
-	214A8-10683		FORK	ﾌｫｰｸ	2	[LF200] INC.2-6
-	234A8-10571		FORK	ﾌｫｰｸ	2	[LFD090] INC.7-10
-	234A8-10501		FORK	ﾌｫｰｸ	2	[LFD092] INC.7-10
-	234A8-10581		FORK	ﾌｫｰｸ	2	[LFD100] INC.7-10
-	234A8-10511		FORK	ﾌｫｰｸ	2	[LFD107] INC.7-10
-	234A8-10591		FORK	ﾌｫｰｸ	2	[LFD110] INC.7-10
-	234A8-10601		FORK	ﾌｫｰｸ	2	[LFD120] INC.7-10
-	234A8-10521		FORK	ﾌｫｰｸ	2	[LFD122] INC.7-10
-	234A8-10611		FORK	ﾌｫｰｸ	2	[LFD130] INC.7-10
-	234A8-10531		FORK	ﾌｫｰｸ	2	[LFD137] INC.7-10
-	234A8-10621		FORK	ﾌｫｰｸ	2	[LFD140] INC.7-10
-	234A8-10631		FORK	ﾌｫｰｸ	2	[LFD150] INC.7-10
-	234A8-10541		FORK	ﾌｫｰｸ	2	[LFD152] INC.7-10
-	234A8-10641		FORK	ﾌｫｰｸ	2	[LFD160] INC.7-10
-	234A8-10551		FORK	ﾌｫｰｸ	2	[LFD167] INC.7-10
-	234A8-10652		FORK	ﾌｫｰｸ	2	[LFD170] INC.7-10
-	234A8-10662		FORK	ﾌｫｰｸ	2	[LFD180] INC.7-10
-	234A8-10562		FORK	ﾌｫｰｸ	2	[LFD182] INC.7-10
-	234A8-10672		FORK	ﾌｫｰｸ	2	[LFD190] INC.7-10
-	234A8-10682		FORK	ﾌｫｰｸ	2	[LFD200] INC.7-10
-	22N58-10501		FORK	ﾌｫｰｸ	2	[LF092/CASCADE] INC.11
-	22N58-10511		FORK	ﾌｫｰｸ	2	[LF107/CASCADE] INC.11

FIG.196 FORK [VFHM2N5]

(M7028160) フォーク

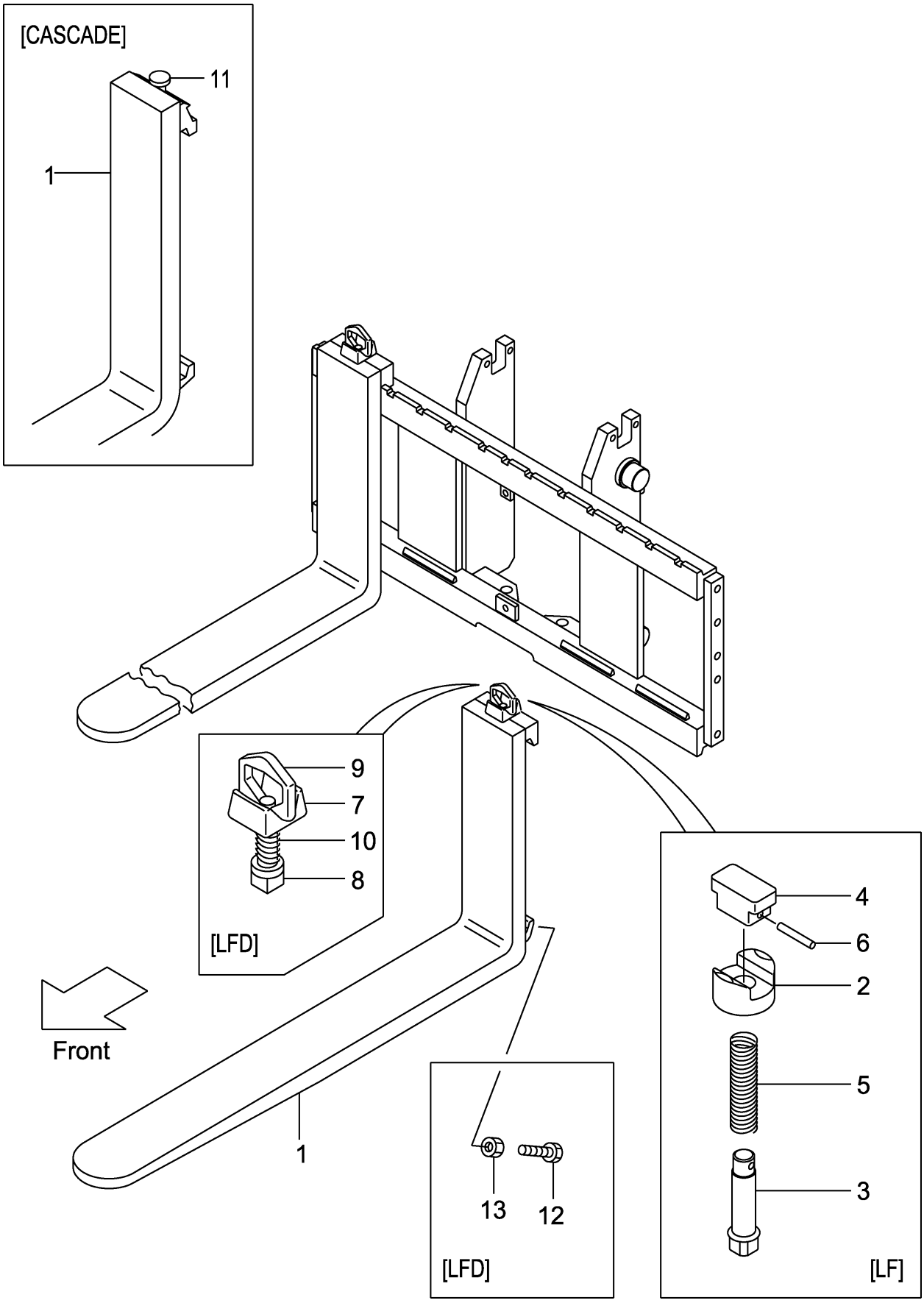

A:VFHM2N5(2T)
B:VFHM2N5(2.5T)

Item No	Part No.	Mark	Description		Req'd	Remarks : Serial No.
-	22N58-10521		FORK	ﾌｫｰｸ	2	[LF122/CASCADE] INC.11
2	216G8-12921		HOLDER	ﾎﾙﾀﾞ	2	[LF]
3	231A8-12001		PIN	ﾋﾟﾝ	2	[LF]
4	231A8-12011		KNOB	ﾉﾌﾞ	2	[LF]
5	231A8-12021		SPRING	ｽﾌﾟﾘﾝｸﾞ	2	[LF]
6	231A8-12031		PIN,SPRING	ﾋﾟﾝ	2	[LF]
A1	214A8-11001		STOPPER-ASSY,FORK	ﾌｫｰｸｽﾄｯﾊﾟｱｯｾﾝ	2	[LFD] INC.7-10
7	214A8-12001		HEAD	ﾍｯﾄﾞ	2	[LFD]
8	214A8-12011		STOPPER	ｽﾄｯﾊﾟ	2	[LFD]
9	214A8-12021		HANDLE	ﾊﾝﾄﾞﾙ	2	[LFD]
10	214A8-12031		SPRING	ｽﾌﾟﾘﾝｸﾞ	2	[LFD]
11	W-K2PK-M		KIT,PIN,STOPPER	ｷｯﾄ	2	[CASCADE]
12	216G8-12101		BOLT	ﾎﾞﾙﾄ	4	[LFD]
13	01402-00010		NUT	ﾅｯﾄ	4	[LFD]

FIG.197 LIFT BRACKET [VFHM2N5]

(M7020910) ﾘﾌﾄﾌﾞﾗｹｯﾄ

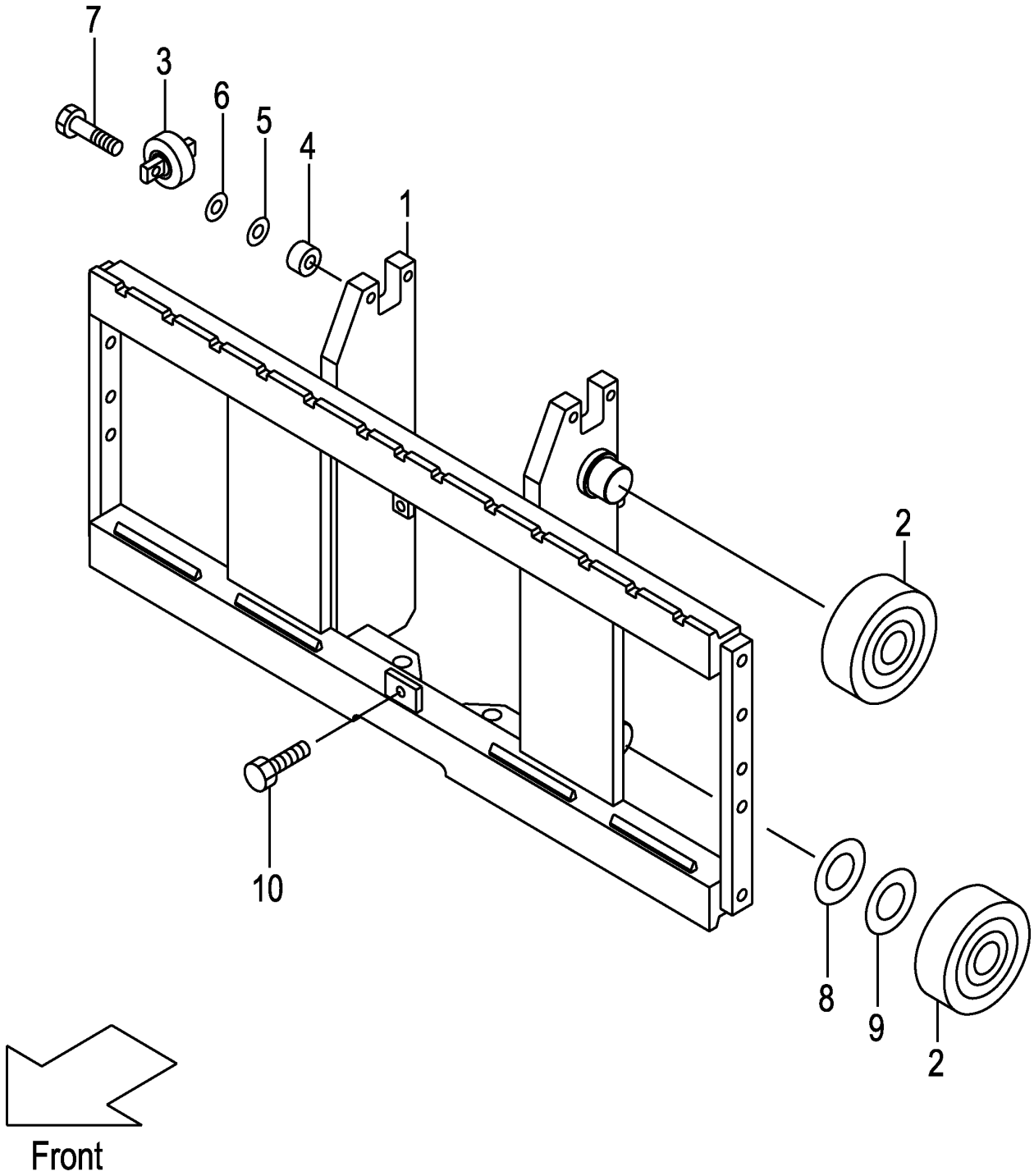

A:VFHM2N5(2T)
B:VFHM2N5(2.5T)

Item No	Part No.	Mark	Description		Req'd	Remarks : Serial No.
1	22N50-90101		BRACKET,LIFT	ﾌﾞﾗｹｯﾄ	1	
-	52N51-61301		BRACKET,LIFT	ﾌﾞﾗｹｯﾄ	1	[WFY110][WFY114][WFY127] [WFY135][WFY138]
-	52N51-61311		BRACKET,LIFT(L)	ﾌﾞﾗｹｯﾄ	1	[WFY135][WFY138][WFY145] [WFY146][WFY154][WFY180]
2	277P8-22051		ROLLER,END,119.0	ﾛｰﾗ	4	
-	577P3-74001		ROLLER,END,119.0	ﾛｰﾗ	4	[FC][CS35][FCS35][FCS45] [FCS55]
-	277P8-22061		ROLLER,END,119.5	ﾛｰﾗ	(4)	
-	577P3-74011		ROLLER,END,119.5	ﾛｰﾗ	(4)	[FC][CS35][FCS35][FCS45] [FCS55]
3	22N58-32701		ROLLER,SIDE,42.0	ﾛｰﾗ	2	
-	52N53-74001		ROLLER,SIDE,42.0	ﾛｰﾗ	2	[FC][CS35][FCS35][FCS45] [FCS55]
4	22N58-32711		SPACER	ｽﾍﾟｰｻ	4	
5	22018-30261		SHIM,T-0.2	ｼﾑ	4	
6	22018-30121		SHIM,T-1.0	ｼﾑ	4	
7	01103-10045		BOLT	ﾎﾞﾙﾄ	4	
8	277P8-22071		SHIM,T-0.5	ｼﾑ	5	
9	277P8-22081		SHIM,T-1.0	ｼﾑ	5	
10	01184-12025		BOLT & WASHER	ﾎﾞﾙﾄ&ﾜｯｼｬ	1	
11	214A0-93001	+	CHART,CAPACITY	ﾁｬｰﾄ	1	A [VFHM360-500]
-	214A0-93011	+	CHART,CAPACITY	ﾁｬｰﾄ	1	A [VFHM540-750]
-	214A0-93201	+	CHART,CAPACITY	ﾁｬｰﾄ	1	B [VFHM360-500]
-	214A0-93211	+	CHART,CAPACITY	ﾁｬｰﾄ	1	B [VFHM540-750]
-	214A0-93031	+	CHART,CAPACITY	ﾁｬｰﾄ	1	A [VFHM360-500/EXA]
-	214A0-93041	+	CHART,CAPACITY	ﾁｬｰﾄ	1	A [VFHM540-750/EXA]
-	214A0-93231	+	CHART,CAPACITY	ﾁｬｰﾄ	1	B [VFHM360-500/EXA]
-	214A0-93241	+	CHART,CAPACITY	ﾁｬｰﾄ	1	B [VFHM540-750/EXA]
-	514A3-82301	+	CHART,CAPACITY	ﾁｬｰﾄ	1	[EXB][EXC][EXE][EXN]
-	514A3-82321	+	CHART,CAPACITY	ﾁｬｰﾄ	1	[EXD]
-	524T3-84031	+	CHART,CAPACITY	ﾁｬｰﾄ	1	[EXR]
-	63110-18921	+	CHART,CAPACITY	ﾁｬｰﾄ	1	[EXB/CHINESE]
-	514A3-82341	+	CHART,CAPACITY	ﾁｬｰﾄ	1	[EXB/FRENCH][EXE/FRENCH] [EXEEC/FRENCH]
-	514A3-82331	+	CHART,CAPACITY	ﾁｬｰﾄ	1	[EXB/SPANISH][EXE/SPANISH] [EXEEC/SPANISH]
-	514A3-82361	+	CHART,CAPACITY	ﾁｬｰﾄ	1	[EXEEC/DANISH][EXNEC/DANISH]
-	514A3-82381	+	CHART,CAPACITY	ﾁｬｰﾄ	1	[EXEEC/GREEK]
-	514A3-82371	+	CHART,CAPACITY	ﾁｬｰﾄ	1	[EXEEC/ITALIAN]
-	514A3-82351	+	CHART,CAPACITY	ﾁｬｰﾄ	1	[EXEEC/DUTCH]
-	514A3-82391	+	CHART,CAPACITY	ﾁｬｰﾄ	1	[EXEEC/PORTUGUESE]

FIG.197 LIFT BRACKET [VFHM2N5]

(M7020910) ﾘﾌﾄﾌﾞﾗｹｯﾄ

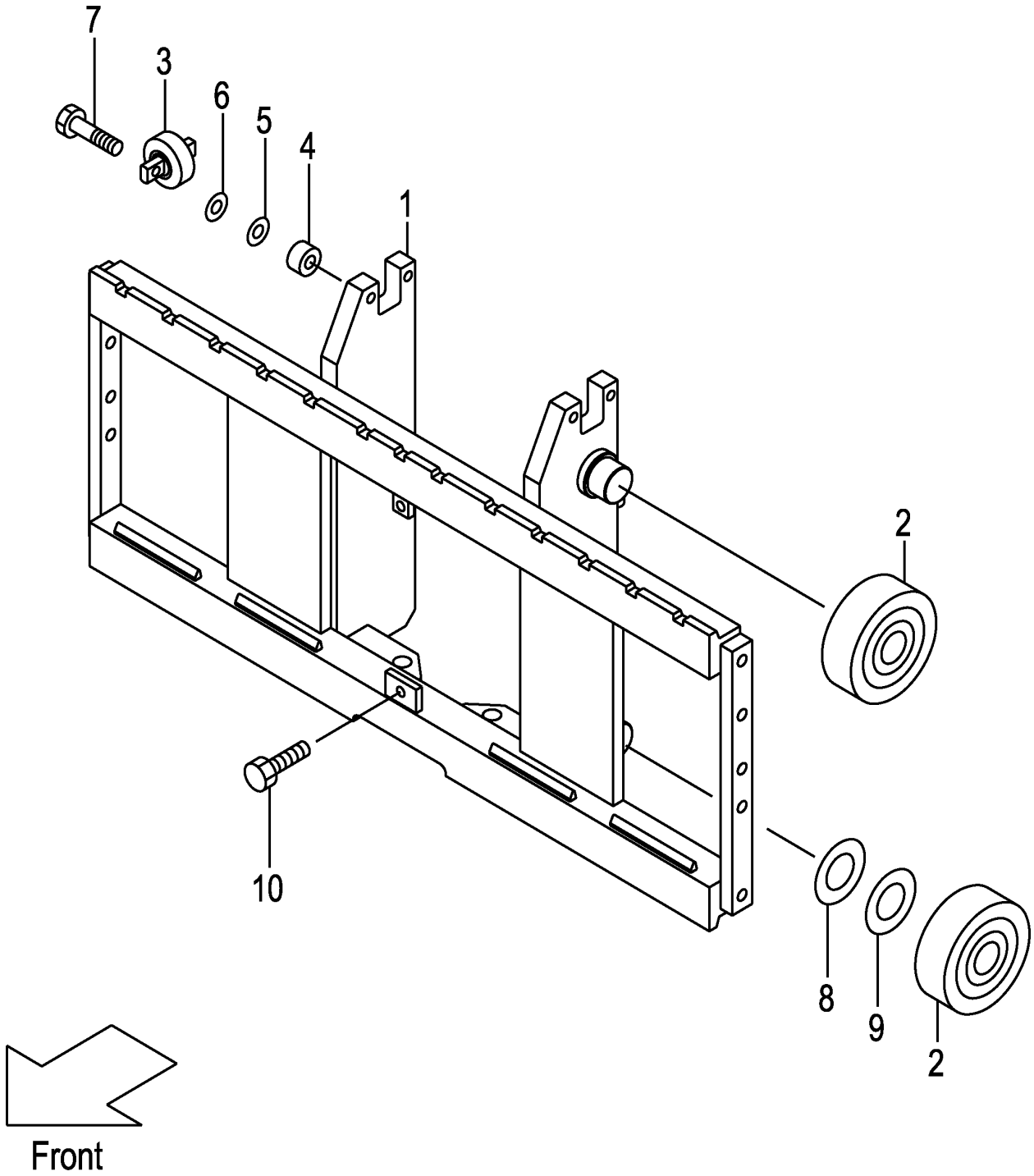

A:VFHM2N5(2T)
B:VFHM2N5(2.5T)

Item No	Part No.	Mark	Description	Req'd	Remarks : Serial No.
-	529F3-82101	+	CHART,CAPACITY ﾁｬｰﾄ	1	[EXNEC/FINNISH]
-	529F3-82111	+	CHART,CAPACITY ﾁｬｰﾄ	1	[EXNEC/SWEDISH]
12	02432-01008	+	RIVET ﾘﾍﾞｯﾄ	4	

FIG.198 BACKREST [VFHM2N5]

(M7028270) ﾊﾞｯｸﾚｽﾄ

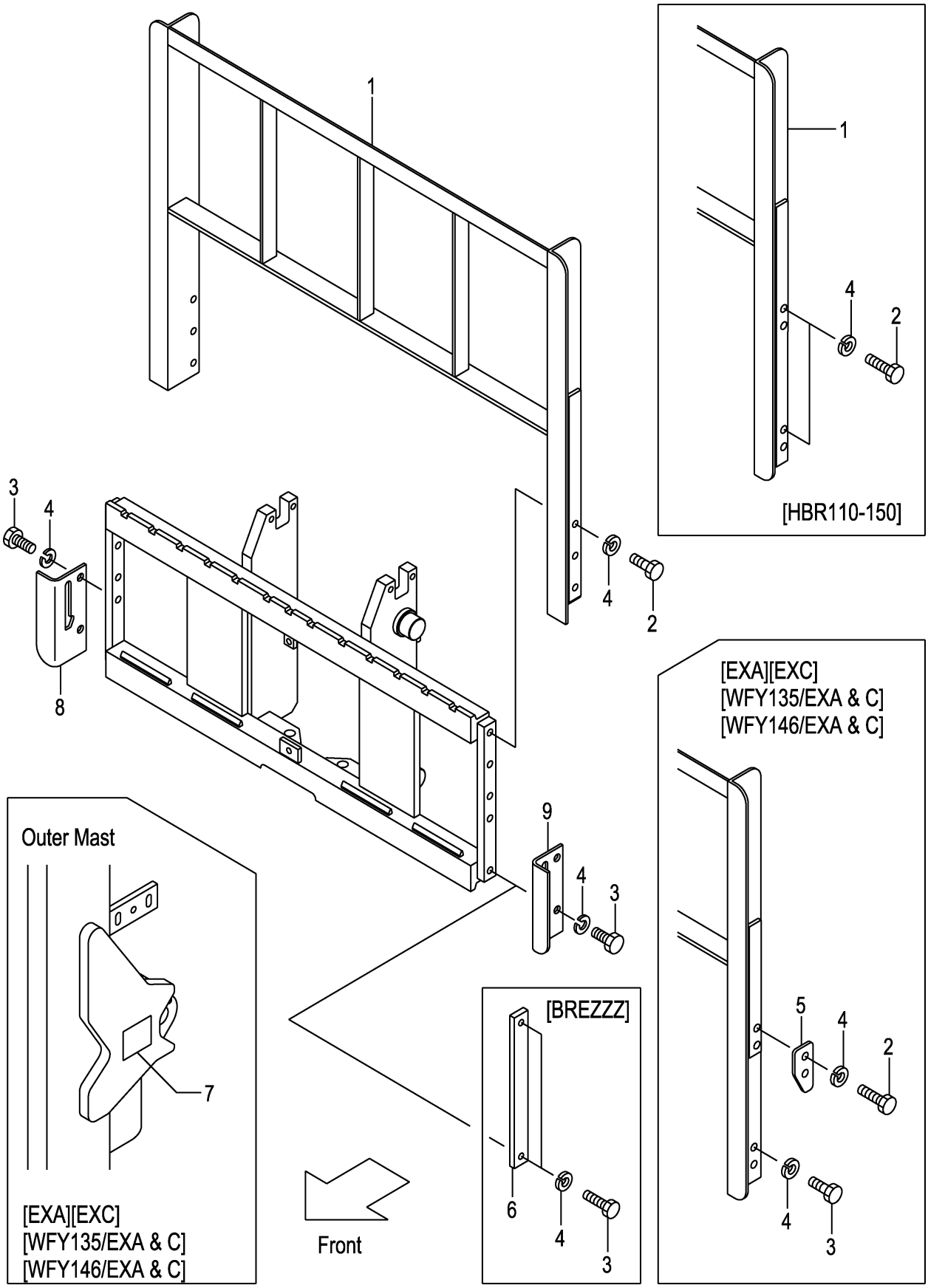

A:VFHM2N5(2T)
B:VFHM2N5(2.5T)

Item No	Part No.	Mark	Description		Req'd	Remarks : Serial No.
1	22N58-22001		BACKREST	ﾊﾞｯｸﾚｽﾄ	1	(WITHOUT BREZZZ)
-	534A2-74001		BACKREST	ﾊﾞｯｸﾚｽﾄ	1	[EXA][EXC]
-	239A8-20101		BACKREST	ﾊﾞｯｸﾚｽﾄ	1	[HBR110]
-	239A8-20111		BACKREST	ﾊﾞｯｸﾚｽﾄ	1	[HBR120]
-	239A8-20121		BACKREST	ﾊﾞｯｸﾚｽﾄ	1	[HBR130]
-	239A8-20131		BACKREST	ﾊﾞｯｸﾚｽﾄ	1	[HBR140]
-	239A8-20141		BACKREST	ﾊﾞｯｸﾚｽﾄ	1	[HBR150]
-	534A1-64402		BACKREST	ﾊﾞｯｸﾚｽﾄ	1	[WFY135]
-	534A1-64412		BACKREST	ﾊﾞｯｸﾚｽﾄ	1	[WFY146]
-	534A2-74101		BACKREST	ﾊﾞｯｸﾚｽﾄ	1	[WFY135/EXA][WFY135/EXC]
-	534A2-74201		BACKREST	ﾊﾞｯｸﾚｽﾄ	1	[WFY146/EXA][WFY146/EXC]
2	01100-14030		BOLT	ﾎﾞﾙﾄ	6	(WITHOUT BREZZZ)
-	01100-14035		BOLT	ﾎﾞﾙﾄ	4	[EXA&C][WFY135/EXA&C] [WFY146/EXA&C]
-	01100-14030		BOLT	ﾎﾞﾙﾄ	8	[HBR110-150]
-	01100-14030		BOLT	ﾎﾞﾙﾄ	4	[WFY135][WFY146]
3	01100-14025		BOLT	ﾎﾞﾙﾄ	4	(WITHOUT HBR110-150)
4	02010-00014		WASHER	ﾜｯｼｬ	10	
-	02010-00014		WASHER	ﾜｯｼｬ	8	[EXA&C][WFY135&146] [HBR110-150] [WFY135&146/EXA&C]
-	02010-00014		WASHER	ﾜｯｼｬ	4	[BREZZZ]
5	534A2-74051		PLATE,STOPPER	ﾌﾟﾚｰﾄ	2	[EXA&C][WFY135/EXA&C] [WFY146/EXA&C]
6	23659-42161		PLATE,SIDE	ﾌﾟﾚｰﾄ	2	[BREZZZ]
7	534A2-74301		DECAL,CAUTION	ﾃﾞｶﾙ	1	[EXA&C][WFY135/EXA&C] [WFY146/EXA&C]
8	22N58-22111		PLATE,UNDER,RH	ﾌﾟﾚｰﾄ	1	
9	22N58-22121		PLATE,UNDER,LH	ﾌﾟﾚｰﾄ	1	

FIG.199 MAST [VFHM2N5]

(M7020710) マスト

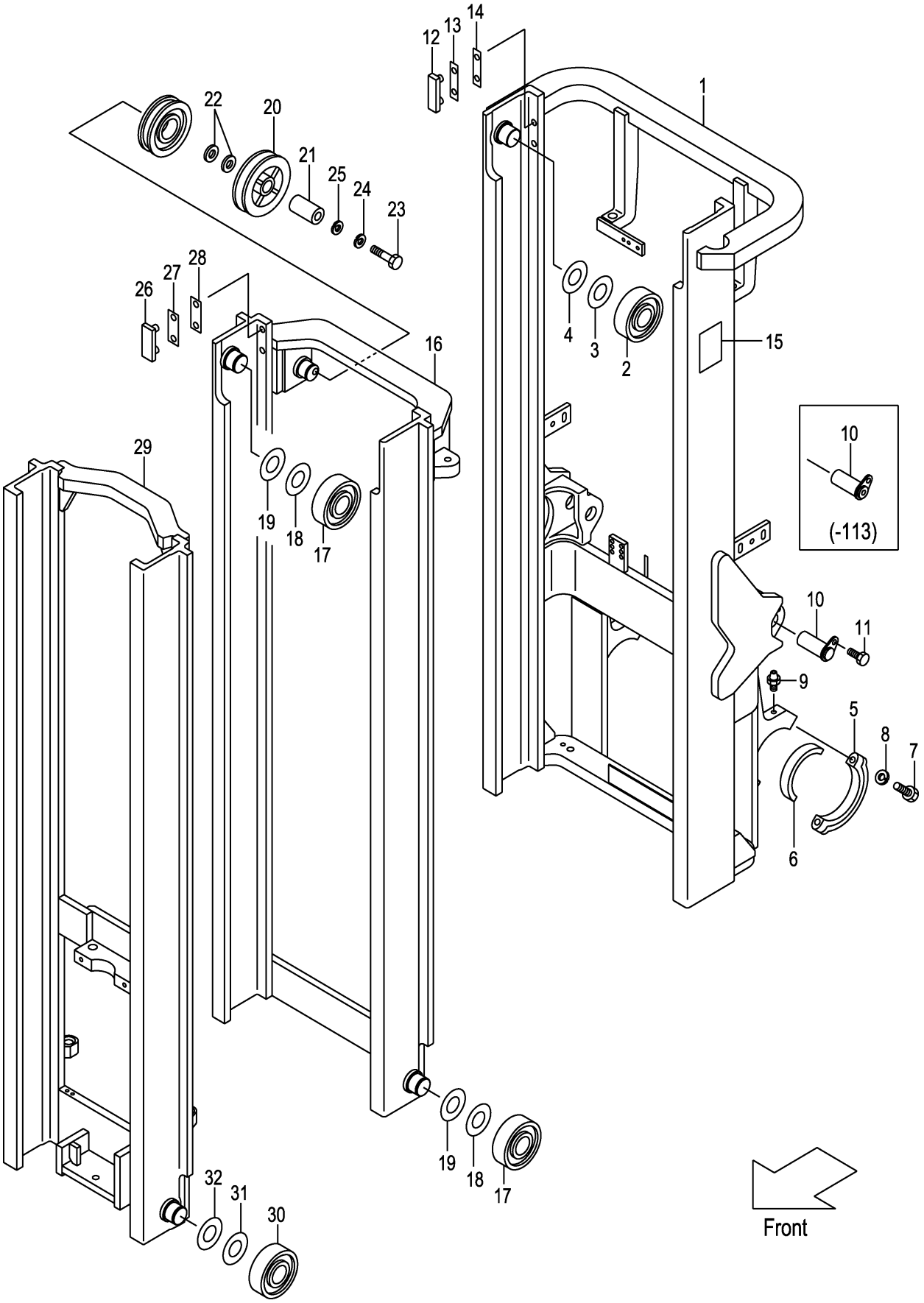

A:VFHM2N5(2T)
B:VFHM2N5(2.5T)

Item No	Part No.	Mark	Description		Req'd	Remarks : Serial No.
1	22N50-70211		MAST,OUTER VFHM360	ｱｳﾀﾏｽﾄ	1	
-	22N50-70221		MAST,OUTER VFHM400	ｱｳﾀﾏｽﾄ	1	
-	22N50-70201		MAST,OUTER VFHM435	ｱｳﾀﾏｽﾄ	1	
-	22N50-70231		MAST,OUTER VFHM480	ｱｳﾀﾏｽﾄ	1	
-	22N50-70241		MAST,OUTER VFHM500	ｱｳﾀﾏｽﾄ	1	
-	22N50-70251		MAST,OUTER VFHM540	ｱｳﾀﾏｽﾄ	1	
-	22N50-70261		MAST,OUTER VFHM550	ｱｳﾀﾏｽﾄ	1	
-	22N50-70271		MAST,OUTER VFHM600	ｱｳﾀﾏｽﾄ	1	
-	22N50-70281		MAST,OUTER VFHM650	ｱｳﾀﾏｽﾄ	1	
-	22N50-70291		MAST,OUTER VFHM700	ｱｳﾀﾏｽﾄ	1	
-	22N50-70301		MAST,OUTER VFHM750	ｱｳﾀﾏｽﾄ	1	
2	277P8-22051		ROLLER,END,119.0	ﾛｰﾗ	2	
-	577P3-74001		ROLLER,END,119.0	ﾛｰﾗ	2	[FC][CS35][FCS35][FCS45] [FCS55]
3	277P8-22071		SHIM,T-0.5	ｼﾑ	12	
4	277P8-22081		SHIM,T-1.0	ｼﾑ	12	
5	277P8-32701		CAP	ｷｬｯﾌﾟ	2	
6	214A8-02201		BUSHING	ﾌﾞｯｼﾝｸﾞ	2	
7	01103-16065		BOLT	ﾎﾞﾙﾄ	4	
8	02011-00016		WASHER	ﾜｯｼｬ	4	
9	04901-00100		FITTING	ﾌｨｯﾃｨﾝｸﾞ	2	
10	272K8-52201		PIN	ﾋﾟﾝ	2	MAST NO.1-113
-	22N58-52501		PIN	ﾋﾟﾝ	2	MAST NO.114-
11	216G8-52301		BOLT	ﾎﾞﾙﾄ	2	
12	216G8-33401		SLIPPER	ｽﾘｯﾊﾟ	2	
13	216G8-33361		SHIM,T-0.5	ｼﾑ	8	
14	216G8-33371		SHIM,T-1.0	ｼﾑ	4	
15	23678-06002		PLATE,NAME	ﾌﾟﾚｰﾄ	1	
16	22N50-70411		MAST,MIDDLE VFHM360	ﾐﾄﾞﾙﾏｽﾄ	1	
-	22N50-70421		MAST,MIDDLE VFHM400	ﾐﾄﾞﾙﾏｽﾄ	1	
-	22N50-70401		MAST,MIDDLE VFHM435	ﾐﾄﾞﾙﾏｽﾄ	1	
-	22N50-70431		MAST,MIDDLE VFHM480	ﾐﾄﾞﾙﾏｽﾄ	1	
-	22N50-70441		MAST,MIDDLE VFHM500	ﾐﾄﾞﾙﾏｽﾄ	1	
-	22N50-70451		MAST,MIDDLE VFHM540	ﾐﾄﾞﾙﾏｽﾄ	1	
-	22N50-70461		MAST,MIDDLE VFHM550	ﾐﾄﾞﾙﾏｽﾄ	1	
-	22N50-70471		MAST,MIDDLE VFHM600	ﾐﾄﾞﾙﾏｽﾄ	1	
-	22N50-70481		MAST,MIDDLE VFHM650	ﾐﾄﾞﾙﾏｽﾄ	1	
-	22N50-70491		MAST,MIDDLE VFHM700	ﾐﾄﾞﾙﾏｽﾄ	1	
-	22N50-70501		MAST,MIDDLE VFHM750	ﾐﾄﾞﾙﾏｽﾄ	1	
17	277P8-22051		ROLLER,END,119.0	ﾛｰﾗ	4	
-	577P3-74001		ROLLER,END,119.0	ﾛｰﾗ	4	[FC][CS35][FCS35][FCS45] [FCS55]
-	277P8-22061		ROLLER,END,119.5	ﾛｰﾗ	(2)	
-	577P3-74011		ROLLER,END,119.5	ﾛｰﾗ	(2)	[FC][CS35][FCS35][FCS45] [FCS55]
18	277P8-22071		SHIM,T-0.5	ｼﾑ	15	
19	277P8-22081		SHIM,T-1.0	ｼﾑ	15	
20	63130-15301		PULLEY	ﾌﾟｰﾘ	1	
21	214A0-72701		COLLAR	ｶﾗｰ	1	
22	62050-12331		SPACER	ｽﾍﾟｰｻ	2	

FIG.199 MAST [VFHM2N5]

(M7020710) マスト

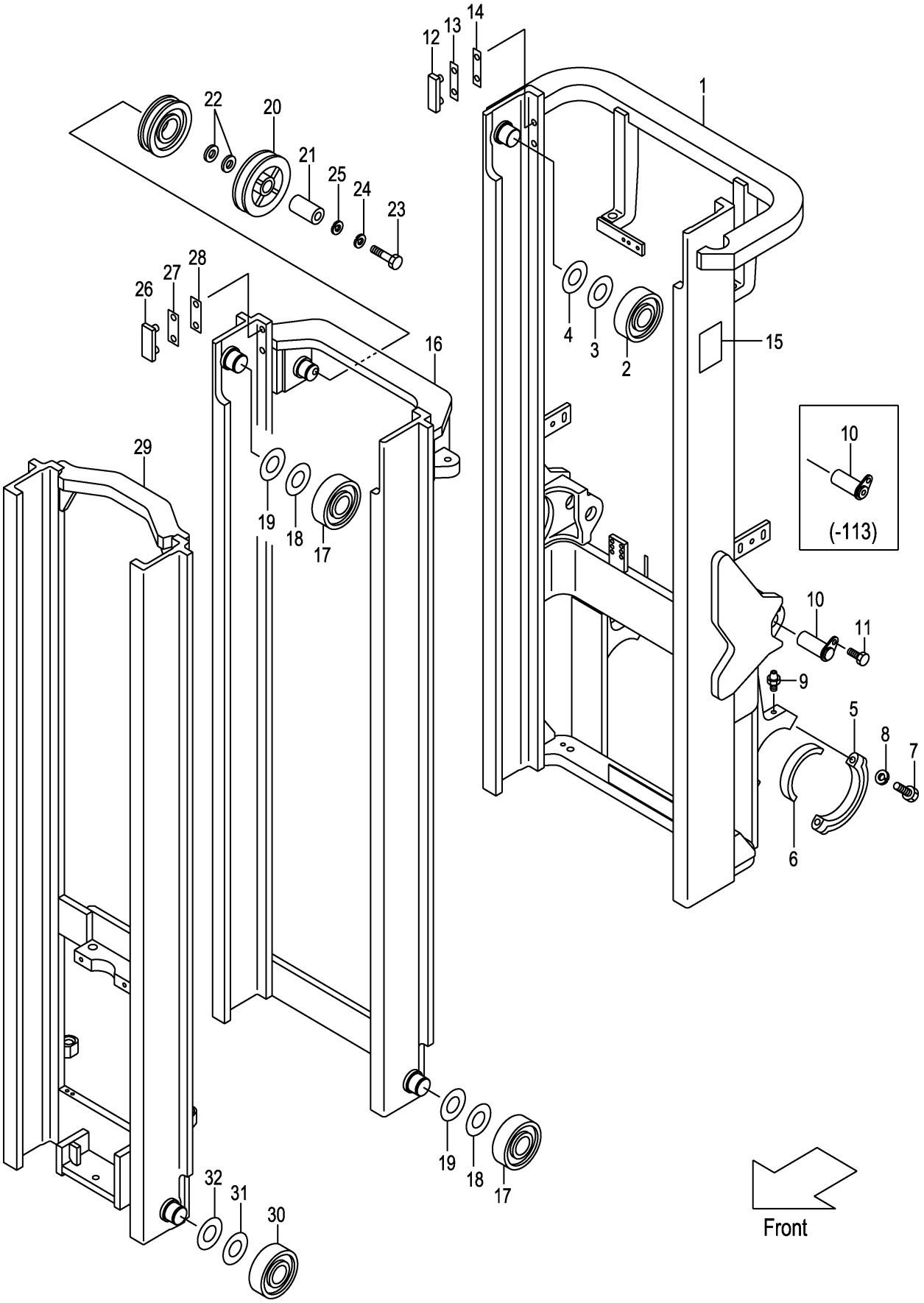

A:VFHM2N5(2T)
B:VFHM2N5(2.5T)

Item No	Part No.	Mark	Description		Req'd	Remarks : Serial No.
23	01100-16060		BOLT	ﾎﾞﾙﾄ	1	
24	02010-00016		WASHER	ﾜｯｼｬ	1	
25	02000-00016		WASHER	ﾜｯｼｬ	1	
26	216G8-33351		SLIPPER	ｽﾘｯﾊﾟ	2	
27	216G8-33361		SHIM,T-0.5	ｼﾑ	4	
28	216G8-33371		SHIM,T-1.0	ｼﾑ	8	
29	22N50-70611		MAST,INNER VFHM360	ｲﾝﾅﾏｽﾄ	1	
-	22N50-70621		MAST,INNER VFHM400	ｲﾝﾅﾏｽﾄ	1	
-	22N50-70601		MAST,INNER VFHM435	ｲﾝﾅﾏｽﾄ	1	
-	22N50-70631		MAST,INNER VFHM480	ｲﾝﾅﾏｽﾄ	1	
-	22N50-70641		MAST,INNER VFHM500	ｲﾝﾅﾏｽﾄ	1	
-	22N50-70651		MAST,INNER VFHM540	ｲﾝﾅﾏｽﾄ	1	
-	22N50-70661		MAST,INNER VFHM550	ｲﾝﾅﾏｽﾄ	1	
-	22N50-70671		MAST,INNER VFHM600	ｲﾝﾅﾏｽﾄ	1	
-	22N50-70681		MAST,INNER VFHM650	ｲﾝﾅﾏｽﾄ	1	
-	22N50-70691		MAST,INNER VFHM700	ｲﾝﾅﾏｽﾄ	1	
-	22N50-70701		MAST,INNER VFHM750	ｲﾝﾅﾏｽﾄ	1	
30	277P8-22051		ROLLER,END,119.0	ﾛｰﾗ	2	
-	577P3-74001		ROLLER,END,119.0	ﾛｰﾗ	2	[FC][CS35][FCS35][FCS45] [FCS55]
-	277P8-22061		ROLLER,END,119.5	ﾛｰﾗ	(2)	
-	577P3-74011		ROLLER,END,119.5	ﾛｰﾗ	(2)	[FC][CS35][FCS35][FCS45] [FCS55]
31	277P8-22071		SHIM,T-0.5	ｼﾑ	12	
32	277P8-22081		SHIM,T-1.0	ｼﾑ	12	

FIG.200 TILT GAUGE [VFHM2N5/(TG,PPC,PR,PRC,MPC)]

(M7020720) ﾃｨﾙﾄｹﾞｰｼﾞ

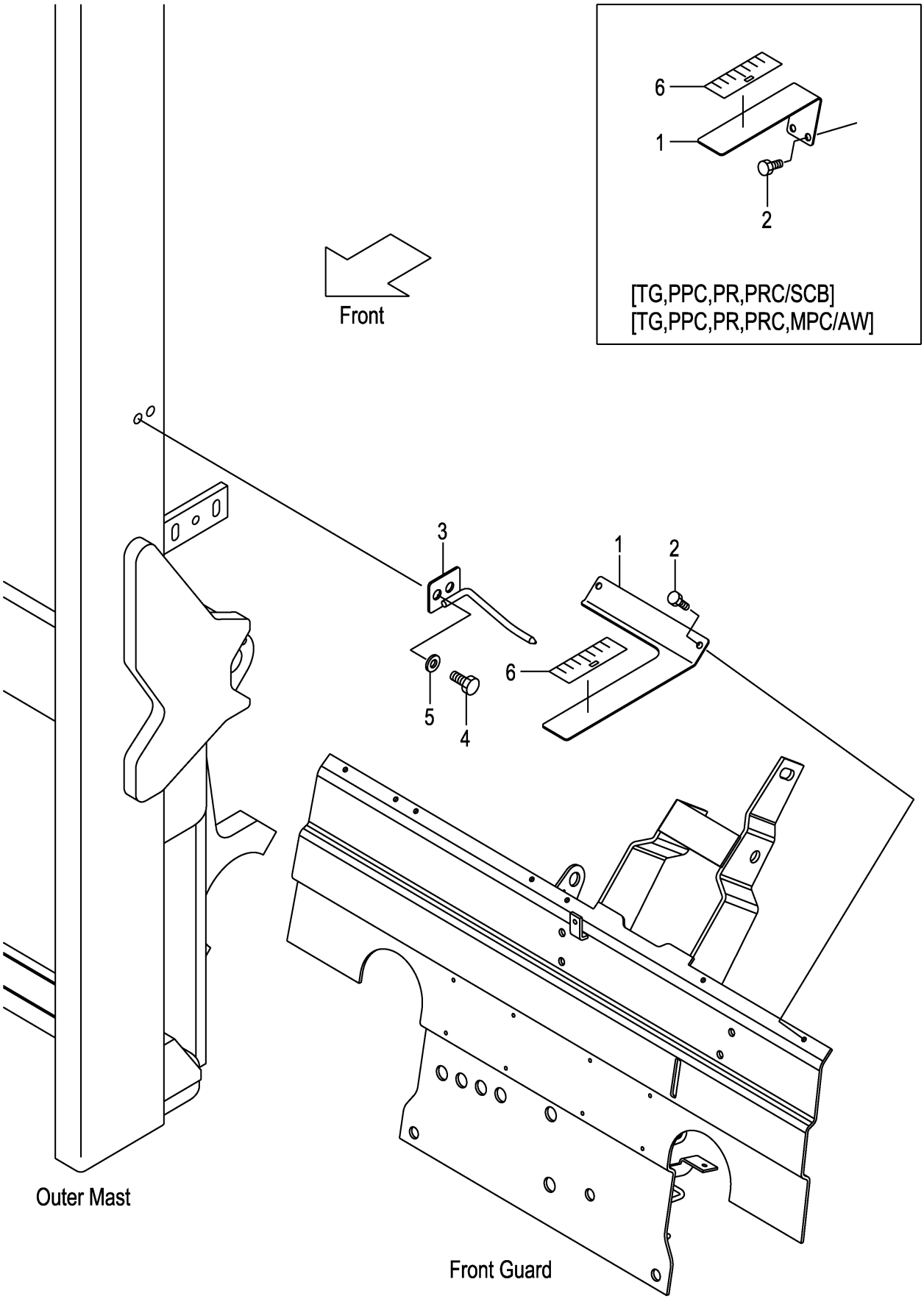

A:VFHM2N5(2T)
B:VFHM2N5(2.5T)

Item No	Part No.	Mark	Description		Req'd	Remarks : Serial No.
1	62A89-21811		GAUGE,TILT	ｹﾞｰｼﾞ	1	[TG][PRC][PPC][MPC][PR]
-	62A89-21831		GAUGE,TILT	ｹﾞｰｼﾞ	1	[SCB/(TG,PR,PPC,PRC,MPC)]
-	62A89-21831		GAUGE,TILT	ｹﾞｰｼﾞ	1	[AW/(TG,PR,PPC,PRC,MPC)]
2	01183-06020		BOLT	ﾎﾞﾙﾄ	2	[TG][PRC][PPC][MPC][PR]
-	01185-08012		BOLT	ﾎﾞﾙﾄ	2	[SCB/(TG,PR,PPC,PRC,MPC)]
-	01185-08012		BOLT	ﾎﾞﾙﾄ	2	[AW/(TG,PR,PPC,PRC,MPC)]
3	62A89-21851		INDICATOR	ｲﾝｼﾞｹｰﾀ	1	[TG][PRC][PPC][MPC][PR]
-	62A89-21851		INDICATOR	ｲﾝｼﾞｹｰﾀ	1	[SCB/(TG,PR,PPC,PRC,MPC)]
-	62A89-21851		INDICATOR	ｲﾝｼﾞｹｰﾀ	1	[AW/(TG,PR,PPC,PRC,MPC)]
4	01184-12025		BOLT	ﾎﾞﾙﾄ	2	[TG][PRC][PPC][MPC][PR]
-	01184-12025		BOLT	ﾎﾞﾙﾄ	2	[SCB/(TG,PR,PPC,PRC,MPC)]
-	01184-12025		BOLT	ﾎﾞﾙﾄ	2	[AW/(TG,PR,PPC,PRC,MPC)]
5	02000-00012		WASHER	ﾜｯｼｬ	2	[TG][PRC][PPC][MPC][PR]
-	02000-00012		WASHER	ﾜｯｼｬ	2	[SCB/(TG,PR,PPC,PRC,MPC)]
-	02000-00012		WASHER	ﾜｯｼｬ	2	[AW/(TG,PR,PPC,PRC,MPC)]
6	62459-23371		SEAL,GAUGE	ｼｰﾙ	1	[TG][PRC][PPC][MPC][PR]
-	62459-23371		SEAL,GAUGE	ｼｰﾙ	1	[SCB/(TG,PR,PPC,PRC,MPC)]
-	62459-23371		SEAL,GAUGE	ｼｰﾙ	1	[AW/(TG,PR,PPC,PRC,MPC)]

FIG.201 LIFT CYLINDER (FRONT)[VFHM2N5]

(M7020810) リフトシリンダ(フロント)

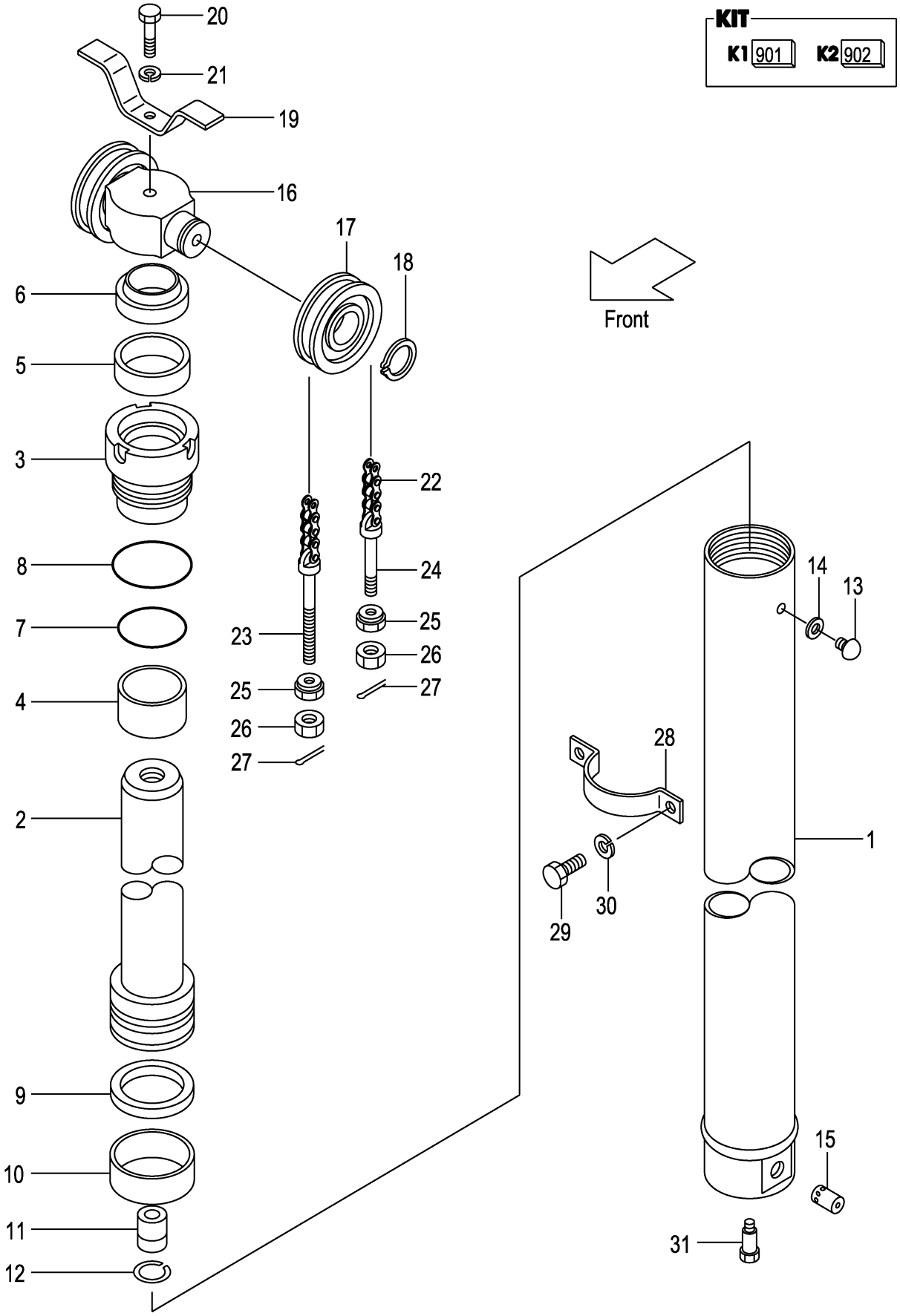

A:VFHM2N5(2T)
B:VFHM2N5(2.5T)

Item No	Part No.	Mark	Description		Req'd	Remarks : Serial No.
A1	212T0-80511		CYL-ASSY,LIFT VFHM360	ﾘﾌﾄｼﾘﾝﾀﾞｱｯｾﾝ	1	INC.1-15
-	212T0-80521		CYL-ASSY,LIFT VFHM400	ﾘﾌﾄｼﾘﾝﾀﾞｱｯｾﾝ	1	INC.1-15
-	212T0-80531		CYL-ASSY,LIFT VFHM435	ﾘﾌﾄｼﾘﾝﾀﾞｱｯｾﾝ	1	INC.1-15
-	212T0-80501		CYL-ASSY,LIFT VFHM480	ﾘﾌﾄｼﾘﾝﾀﾞｱｯｾﾝ	1	INC.1-15
-	212T0-80541		CYL-ASSY,LIFT VFHM500	ﾘﾌﾄｼﾘﾝﾀﾞｱｯｾﾝ	1	INC.1-15
-	212T0-80551		CYL-ASSY,LIFT VFHM540	ﾘﾌﾄｼﾘﾝﾀﾞｱｯｾﾝ	1	INC.1-15
-	212T0-80561		CYL-ASSY,LIFT VFHM550	ﾘﾌﾄｼﾘﾝﾀﾞｱｯｾﾝ	1	INC.1-15
-	212T0-80571		CYL-ASSY,LIFT VFHM600	ﾘﾌﾄｼﾘﾝﾀﾞｱｯｾﾝ	1	INC.1-15
-	212T0-80581		CYL-ASSY,LIFT VFHM650	ﾘﾌﾄｼﾘﾝﾀﾞｱｯｾﾝ	1	INC.1-15
-	212T0-80591		CYL-ASSY,LIFT VFHM700	ﾘﾌﾄｼﾘﾝﾀﾞｱｯｾﾝ	1	INC.1-15
-	212T0-80601		CYL-ASSY,LIFT VFHM750	ﾘﾌﾄｼﾘﾝﾀﾞｱｯｾﾝ	1	INC.1-15
901	B-B675B-00003	K1	KIT,CYL,HEAD		1	INC.3,4
				ｼﾘﾝﾀﾞﾍｯﾄﾞﾍｯﾄﾞｷｯﾄ		
902	B-B675A-00006	K2	KIT,REPAIR	ﾘﾍﾟｱｷｯﾄ	1	INC.5-10,14
1	B-B6717-87601		BODY,CYL VFHM360	ﾎﾞﾃﾞｨ	1	
-	B-B6717-87701		BODY,CYL VFHM400	ﾎﾞﾃﾞｨ	1	
-	B-B6717-87801		BODY,CYL VFHM435	ﾎﾞﾃﾞｨ	1	
-	B-B6717-87901		BODY,CYL VFHM480	ﾎﾞﾃﾞｨ	1	
-	B-B6717-88001		BODY,CYL VFHM500	ﾎﾞﾃﾞｨ	1	
-	B-B6717-88101		BODY,CYL VFHM540	ﾎﾞﾃﾞｨ	1	
-	B-B6717-88201		BODY,CYL VFHM550	ﾎﾞﾃﾞｨ	1	
-	B-B6717-88301		BODY,CYL VFHM600	ﾎﾞﾃﾞｨ	1	
-	B-B6717-88401		BODY,CYL VFHM650	ﾎﾞﾃﾞｨ	1	
-	B-B6717-88501		BODY,CYL VFHM700	ﾎﾞﾃﾞｨ	1	
-	B-B6717-88601		BODY,CYL VFHM750	ﾎﾞﾃﾞｨ	1	
2	B-B6717-87602		ROD VFHM360	ﾛｯﾄﾞ	1	
-	B-B6717-87702		ROD VFHM400	ﾛｯﾄﾞ	1	
-	B-B6717-87802		ROD VFHM435	ﾛｯﾄﾞ	1	
-	B-B6717-87902		ROD VFHM480	ﾛｯﾄﾞ	1	
-	B-B6717-88002		ROD VFHM500	ﾛｯﾄﾞ	1	
-	B-B6717-88102		ROD VFHM540	ﾛｯﾄﾞ	1	
-	B-B6717-88202		ROD VFHM550	ﾛｯﾄﾞ	1	
-	B-B6717-88302		ROD VFHM600	ﾛｯﾄﾞ	1	
-	B-B6717-88402		ROD VFHM650	ﾛｯﾄﾞ	1	
-	B-B6717-88502		ROD VFHM700	ﾛｯﾄﾞ	1	
-	B-B6717-88602		ROD VFHM750	ﾛｯﾄﾞ	1	
3	B-B6121-75007	*	HEAD	ﾍｯﾄﾞ	1	
4	B-30131-55009	*	BUSHING	ﾌﾞｯｼﾝｸﾞ	1	
5	B-30961-55013	*	U-RING	Uﾘﾝｸﾞ	1	
6	B-30191-55050	*	RING,WIPER	ﾘﾝｸﾞ	1	
7	B-95123-07000	*	O-RING	Oﾘﾝｸﾞ	1	
8	B-95151-07500	*	O-RING	Oﾘﾝｸﾞ	1	
9	B-B6983-75007	*	RING,SEAL	ﾘﾝｸﾞ	1	
10	B-B6181-75007	*	RING,SLIDE	ﾘﾝｸﾞ	1	
11	B-C4300-22001		VALVE,CHECK	ﾊﾞﾙﾌﾞ	1	
12	B-94721-22101		RING,SNAP	ﾘﾝｸﾞ	1	
13	B-B6521-90004		PLUG	ﾌﾟﾗｸﾞ	1	
14	B-B6711-00001	*	GASKET	ｶﾞｽｹｯﾄ	1	
15	B-26570-30115		VALVE	ﾊﾞﾙﾌﾞ	1	
16	212T0-82001		HEAD,PISTON	ﾍｯﾄﾞ	1	

FIG.201 LIFT CYLINDER (FRONT)[VFHM2N5]

(M7020810) リフトシリンダ(フロント)

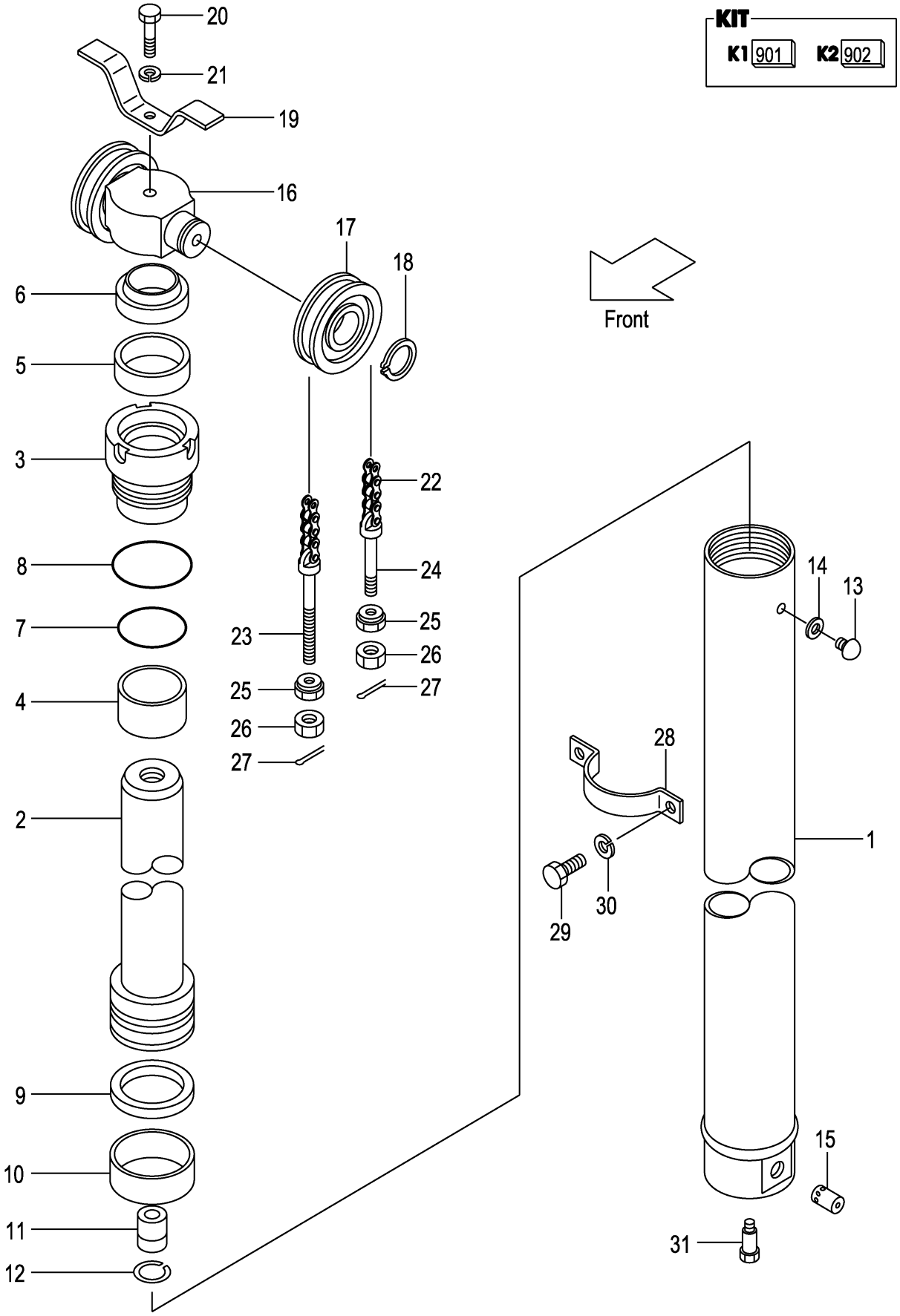

A:VFHM2N5(2T)
B:VFHM2N5(2.5T)

Item No	Part No.	Mark	Description		Req'd	Remarks : Serial No.
17	234A8-43501		SHEAVE	ｼｰﾌﾞ	2	
-	22208-40031		SHEAVE	ｼｰﾌﾞ	2	[FC][FCS35][FCS45][FCS55]
18	02100-00040		RING,SNAP	ﾘﾝｸﾞ	2	
19	214A0-82681		STOPPER	ｽﾄｯﾊﾟ	1	
20	01100-16070		BOLT	ﾎﾞﾙﾄ	1	
21	02010-00016		WASHER	ﾜｯｼｬ	1	
22	22679-45651		CHAIN,LEAF VFHM360	ﾁｪｰﾝ	2	
-	22679-45731		CHAIN,LEAF VFHM400	ﾁｪｰﾝ	2	
-	22679-45791		CHAIN,LEAF VFHM435	ﾁｪｰﾝ	2	
-	22679-45871		CHAIN,LEAF VFHM480	ﾁｪｰﾝ	2	
-	22679-45911		CHAIN,LEAF VFHM500	ﾁｪｰﾝ	2	
-	22679-45991		CHAIN,LEAF VFHM540	ﾁｪｰﾝ	2	
-	22679-46011		CHAIN,LEAF VFHM550	ﾁｪｰﾝ	2	
-	22679-46111		CHAIN,LEAF VFHM600	ﾁｪｰﾝ	2	
-	22679-46211		CHAIN,LEAF VFHM650	ﾁｪｰﾝ	2	
-	22679-46331		CHAIN,LEAF VFHM700	ﾁｪｰﾝ	2	
-	22679-46411		CHAIN,LEAF VFHM750	ﾁｪｰﾝ	2	
-	09001-10037		CHAIN,ROLLER VFHM360	ﾁｪｰﾝ	2	[FC][FCS35][FCS45][FCS55]
-	09001-10041		CHAIN,ROLLER VFHM400	ﾁｪｰﾝ	2	[FC][FCS35][FCS45][FCS55]
-	09001-10045		CHAIN,ROLLER VFHM435	ﾁｪｰﾝ	2	[FC][FCS35][FCS45][FCS55]
-	09001-10051		CHAIN,ROLLER VFHM480	ﾁｪｰﾝ	2	[FC][FCS35][FCS45][FCS55]
-	09001-10053		CHAIN,ROLLER VFHM500	ﾁｪｰﾝ	2	[FC][FCS35][FCS45][FCS55]
-	09001-10057		CHAIN,ROLLER VFHM540	ﾁｪｰﾝ	2	[FC][FCS35][FCS45][FCS55]
-	09001-10059		CHAIN,ROLLER VFHM550	ﾁｪｰﾝ	2	[FC][FCS35][FCS45][FCS55]
-	09001-10065		CHAIN,ROLLER VFHM600	ﾁｪｰﾝ	2	[FC][FCS35][FCS45][FCS55]
-	09001-10071		CHAIN,ROLLER VFHM650	ﾁｪｰﾝ	2	[FC][FCS35][FCS45][FCS55]
-	09001-10077		CHAIN,ROLLER VFHM700	ﾁｪｰﾝ	2	[FC][FCS35][FCS45][FCS55]
-	09001-10083		CHAIN,ROLLER VFHM750	ﾁｪｰﾝ	2	[FC][FCS35][FCS45][FCS55]
23	52672-72231		PIN,ANCHOR	ﾋﾟﾝ	2	
-	22218-42111		PIN,ANCHOR	ﾋﾟﾝ	2	[FC][FCS35][FCS45][FCS55]
24	23500-82001		PIN,ANCHOR	ﾋﾟﾝ	2	
-	231A0-82001		PIN,ANCHOR	ﾋﾟﾝ	2	[FC][FCS35][FCS45][FCS55]
25	22218-40191		NUT	ﾅｯﾄ	4	
26	01400-00018		NUT	ﾅｯﾄ	4	
27	02200-03030		PIN,COTTER	ﾋﾟﾝ	4	
28	212T0-82101		SUPPORT	ｻﾎﾟｰﾄ	1	
29	01103-10018		BOLT	ﾎﾞﾙﾄ	2	
30	02011-00010		WASHER	ﾜｯｼｬ	2	
31	214A0-82831		BOLT	ﾎﾞﾙﾄ	1	

FIG.202 LIFT CYLINDER (REAR)[VFHM2N5]

(M7020820) リフトシリンダ(リヤー)

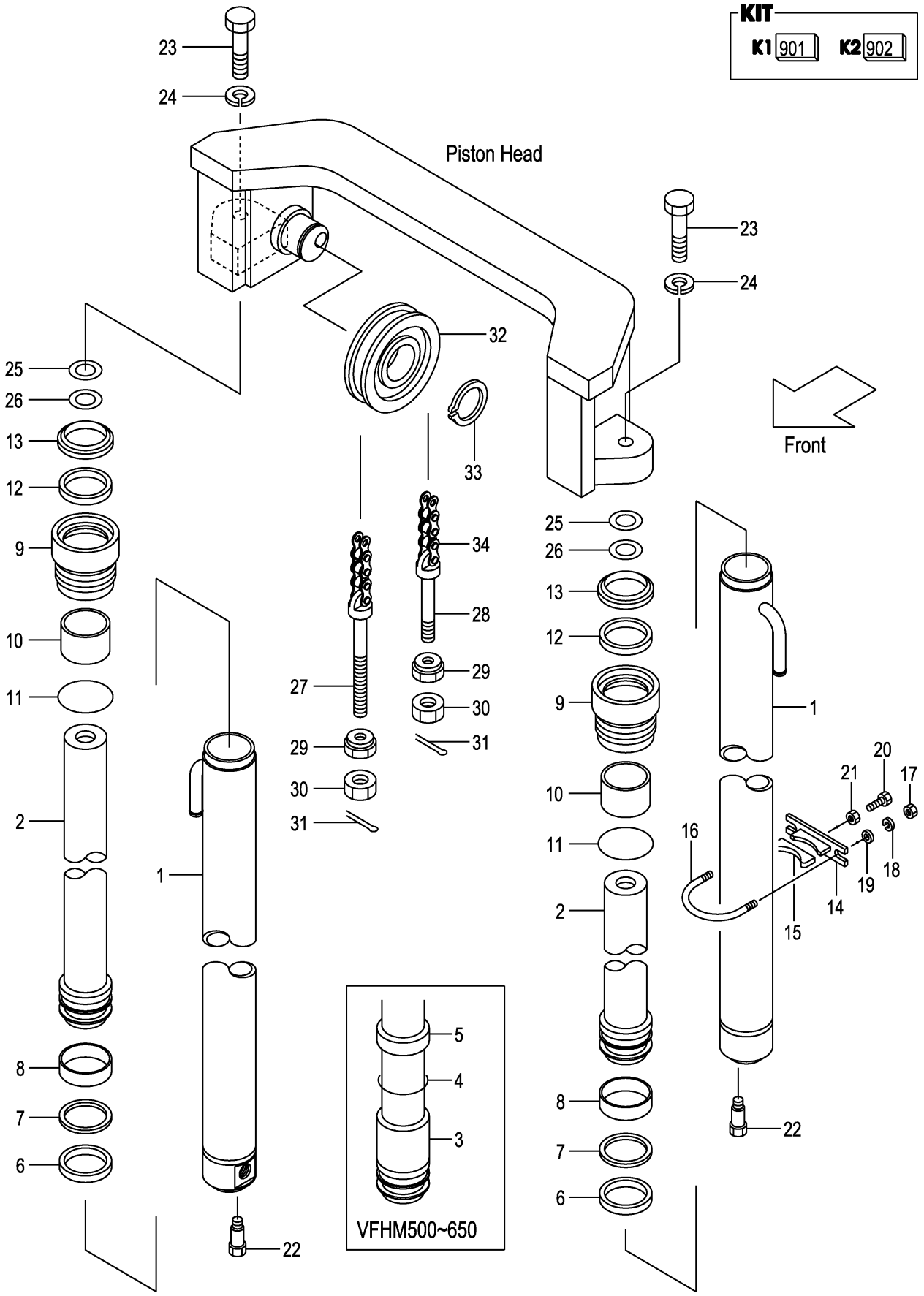

A:VFHM2N5(2T)
B:VFHM2N5(2.5T)

Item No	Part No.	Mark	Description		Req'd	Remarks : Serial No.
A1	22N50-81611		CYL-ASSY,LIFT VFHM360	ﾘﾌﾄｼﾘﾝﾀﾞｱｯｾﾝ	2	INC.1,2,6-13
-	22N50-81621		CYL-ASSY,LIFT VFHM400	ﾘﾌﾄｼﾘﾝﾀﾞｱｯｾﾝ	2	INC.1,2,6-13
-	22N50-81601		CYL-ASSY,LIFT VFHM435	ﾘﾌﾄｼﾘﾝﾀﾞｱｯｾﾝ	2	INC.1,2,6-13
-	22N50-81631		CYL-ASSY,LIFT VFHM480	ﾘﾌﾄｼﾘﾝﾀﾞｱｯｾﾝ	2	INC.1,2,6-13
-	22N50-81641		CYL-ASSY,LIFT VFHM500	ﾘﾌﾄｼﾘﾝﾀﾞｱｯｾﾝ	2	INC.1-13
-	22N50-81651		CYL-ASSY,LIFT VFHM540	ﾘﾌﾄｼﾘﾝﾀﾞｱｯｾﾝ	2	INC.1-13
-	22N50-81661		CYL-ASSY,LIFT VFHM550	ﾘﾌﾄｼﾘﾝﾀﾞｱｯｾﾝ	2	INC.1-13
-	22N50-81671		CYL-ASSY,LIFT VFHM600	ﾘﾌﾄｼﾘﾝﾀﾞｱｯｾﾝ	2	INC.1-13
-	22N50-81681		CYL-ASSY,LIFT VFHM650	ﾘﾌﾄｼﾘﾝﾀﾞｱｯｾﾝ	2	INC.1-13
-	22N50-81691		CYL-ASSY,LIFT VFHM700	ﾘﾌﾄｼﾘﾝﾀﾞｱｯｾﾝ	2	INC.1,2,6-13
-	22N50-81701		CYL-ASSY,LIFT VFHM750	ﾘﾌﾄｼﾘﾝﾀﾞｱｯｾﾝ	2	INC.1,2,6-13
901	B-3050B-00119	K1	KIT,CYL,HEAD		2	INC.9,10
				ｼﾘﾝﾀﾞﾍｯﾄﾞﾍｯﾄﾞｷｯﾄ		
902	B-3050A-00093	K2	KIT,REPAIR	ﾘﾍﾟｱｷｯﾄ	2	INC.6,7,11-13
1	B-B6567-10601		BODY,CYL VFHM360	ﾎﾞﾃﾞｨ	2	
-	B-B6567-10701		BODY,CYL VFHM400	ﾎﾞﾃﾞｨ	2	
-	B-B6567-10801		BODY,CYL VFHM435	ﾎﾞﾃﾞｨ	2	
-	B-B6567-10901		BODY,CYL VFHM480	ﾎﾞﾃﾞｨ	2	
-	B-B6567-11001		BODY,CYL VFHM500	ﾎﾞﾃﾞｨ	2	
-	B-B6567-11101		BODY,CYL VFHM540	ﾎﾞﾃﾞｨ	2	
-	B-B6567-11201		BODY,CYL VFHM550	ﾎﾞﾃﾞｨ	2	
-	B-B6567-11301		BODY,CYL VFHM600	ﾎﾞﾃﾞｨ	2	
-	B-B6567-11401		BODY,CYL VFHM650	ﾎﾞﾃﾞｨ	2	
-	B-B6567-11501		BODY,CYL VFHM700	ﾎﾞﾃﾞｨ	2	
-	B-B6567-11601		BODY,CYL VFHM750	ﾎﾞﾃﾞｨ	2	
2	B-B6567-10602		ROD VFHM360	ﾛｯﾄﾞ	2	
-	B-B6567-10702		ROD VFHM400	ﾛｯﾄﾞ	2	
-	B-B6567-10802		ROD VFHM435	ﾛｯﾄﾞ	2	
-	B-B6567-10902		ROD VFHM480	ﾛｯﾄﾞ	2	
-	B-B6567-11002		ROD VFHM500	ﾛｯﾄﾞ	2	
-	B-B6567-11102		ROD VFHM540	ﾛｯﾄﾞ	2	
-	B-B6567-11202		ROD VFHM550	ﾛｯﾄﾞ	2	
-	B-B6567-11302		ROD VFHM600	ﾛｯﾄﾞ	2	
-	B-B6567-11402		ROD VFHM650	ﾛｯﾄﾞ	2	
-	B-B6567-11502		ROD VFHM700	ﾛｯﾄﾞ	2	
-	B-B6567-11602		ROD VFHM750	ﾛｯﾄﾞ	2	
3	B-B6111-40022		SPACER VFHM500	ｽﾍﾟｰｻ	2	
-	B-B6111-40034		SPACER VFHM540	ｽﾍﾟｰｻ	2	
-	B-B6111-40022		SPACER VFHM550	ｽﾍﾟｰｻ	2	
-	B-B6111-40023		SPACER VFHM600	ｽﾍﾟｰｻ	2	
-	B-B6111-40026		SPACER VFHM650	ｽﾍﾟｰｻ	2	
4	B-95151-04000		O-RING	Oﾘﾝｸﾞ	2	(VFHM500-650)
5	B-30096-02207		WEARING	ｳｴｱﾘﾝｸﾞ	2	(VFHM500-650)
6	B-30161-50046	*	U-RING	Uﾘﾝｸﾞ	2	
7	B-30461-50039	*	RING,BACK-UP	ﾘﾝｸﾞ	2	
8	B-30131-50018		WEARING	ｳｴｱﾘﾝｸﾞ	2	
9	B-30121-50102	*	CAP,CYL	ｷｬｯﾌﾟ	2	
10	B-30131-40017	*	BUSHING	ﾌﾞｯｼﾝｸﾞ	2	
11	B-30161-91774	*	O-RING	Oﾘﾝｸﾞ	2	
12	B-30961-04012	*	PACKING	ﾊﾟｯｷﾝｸﾞ	2	

FIG.202 LIFT CYLINDER (REAR)[VFHM2N5]

(M7020820) リフトシリンダ(リヤー)

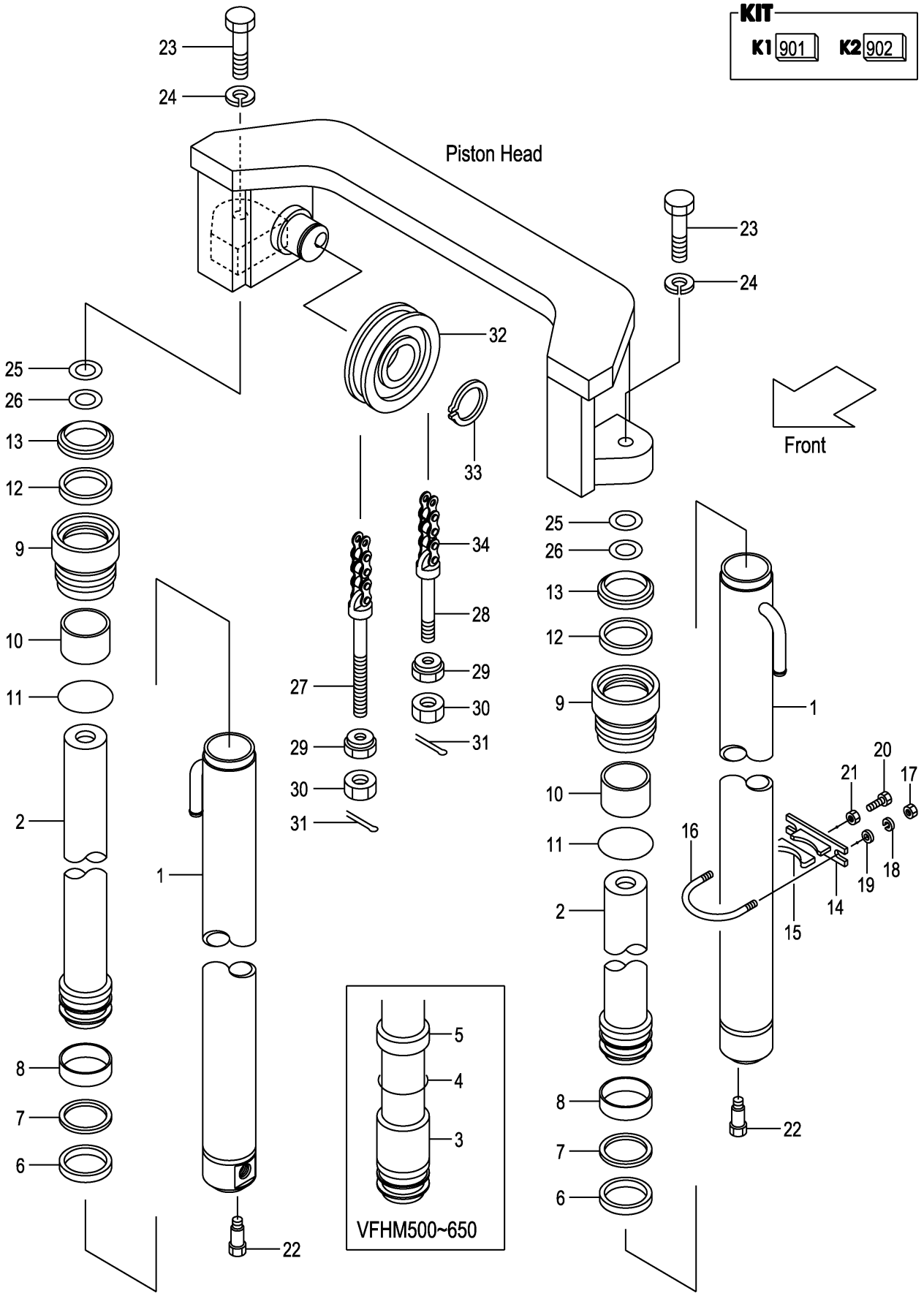

A:VFHM2N5(2T)
B:VFHM2N5(2.5T)

Item No	Part No.	Mark	Description		Req'd	Remarks : Serial No.
13	B-30191-40025	*	SEAL,DUST	ｼｰﾙ	2	
A2	215E8-42171		SUPPORT-ASSY	ｻﾎﾟｰﾄｱｯｾﾝ	2	(VFHM360-550) INC.14,15
-	215E8-42171		SUPPORT-ASSY	ｻﾎﾟｰﾄｱｯｾﾝ	4	(VFHM600-750) INC.14,15
14	215E8-42181		SUPPORT	ｻﾎﾟｰﾄ	2	(VFHM360-550)
-	215E8-42181		SUPPORT	ｻﾎﾟｰﾄ	4	(VFHM600-750)
15	24868-42111		RUBBER	ﾗﾊﾞｰ	2	(VFHM360-550)
-	24868-42111		RUBBER	ﾗﾊﾞｰ	4	(VFHM600-750)
16	234A8-42551		U-BOLT	Uﾎﾞﾙﾄ	2	(VFHM360-550)
-	234A8-42551		U-BOLT	Uﾎﾞﾙﾄ	4	(VFHM600-750)
17	234A8-42561		NUT	ﾅｯﾄ	4	(VFHM360-550)
-	234A8-42561		NUT	ﾅｯﾄ	8	(VFHM600-750)
18	02010-20010		WASHER	ﾜｯｼｬ	4	(VFHM360-550)
-	02010-20010		WASHER	ﾜｯｼｬ	8	(VFHM600-750)
19	02000-20010		WASHER	ﾜｯｼｬ	4	(VFHM360-550)
-	02000-20010		WASHER	ﾜｯｼｬ	8	(VFHM600-750)
20	232A8-42201		BOLT	ﾎﾞﾙﾄ	2	(VFHM360-550)
-	232A8-42201		BOLT	ﾎﾞﾙﾄ	4	(VFHM600-750)
21	234A8-42571		NUT	ﾅｯﾄ	2	(VFHM360-550)
-	234A8-42571		NUT	ﾅｯﾄ	4	(VFHM600-750)
22	214A8-42661		BOLT	ﾎﾞﾙﾄ	2	
23	01103-14040		BOLT	ﾎﾞﾙﾄ	2	
24	02011-00014		WASHER	ﾜｯｼｬ	2	
25	22517-40051		SHIM,T-1.0	ｼﾑ	10	
26	22717-40081		SHIM,T-0.5	ｼﾑ	10	
27	52672-72231		PIN,ANCHOR	ﾋﾟﾝ	2	
-	22218-42111		PIN,ANCHOR	ﾋﾟﾝ	2	[FC][FCS35][FCS45][FCS55]
28	23500-82001		PIN,ANCHOR	ﾋﾟﾝ	2	
-	23658-42531		PIN,ANCHOR	ﾋﾟﾝ	2	[FC][FCS35][FCS45][FCS55]
29	22218-40191		NUT	ﾅｯﾄ	4	
30	01400-00018		NUT	ﾅｯﾄ	4	
31	02200-03030		PIN,COTTER	ﾋﾟﾝ	4	
32	234A8-43501		SHEAVE	ｼｰﾌﾞ	2	
-	22208-40031		SHEAVE	ｼｰﾌﾞ	2	[FC][FCS35][FCS45][FCS55]
33	02100-00040		RING,SNAP	ﾘﾝｸﾞ	2	
34	22679-45831		CHAIN,LEAF VFHM360	ﾁｪｰﾝ	2	
-	22679-45891		CHAIN,LEAF VFHM400	ﾁｪｰﾝ	2	
-	22679-45951		CHAIN,LEAF VFHM435	ﾁｪｰﾝ	2	
-	22679-46031		CHAIN,LEAF VFHM480	ﾁｪｰﾝ	2	
-	22679-46091		CHAIN,LEAF VFHM500	ﾁｪｰﾝ	2	
-	22679-46151		CHAIN,LEAF VFHM540	ﾁｪｰﾝ	2	
-	22679-46171		CHAIN,LEAF VFHM550	ﾁｪｰﾝ	2	
-	22679-46271		CHAIN,LEAF VFHM600	ﾁｪｰﾝ	2	
-	22679-46391		CHAIN,LEAF VFHM650	ﾁｪｰﾝ	2	
-	22679-46491		CHAIN,LEAF VFHM700	ﾁｪｰﾝ	2	
-	22679-46591		CHAIN,LEAF VFHM750	ﾁｪｰﾝ	2	
-	09001-10049		CHAIN,ROLLER VFHM360	ﾁｪｰﾝ	2	[FC][FCS35][FCS45][FCS55]
-	09001-10053		CHAIN,ROLLER VFHM400	ﾁｪｰﾝ	2	[FC][FCS35][FCS45][FCS55]
-	09001-10057		CHAIN,ROLLER VFHM435	ﾁｪｰﾝ	2	[FC][FCS35][FCS45][FCS55]
-	09001-10061		CHAIN,ROLLER VFHM480	ﾁｪｰﾝ	2	[FC][FCS35][FCS45][FCS55]
-	09001-10065		CHAIN,ROLLER VFHM500	ﾁｪｰﾝ	2	[FC][FCS35][FCS45][FCS55]

FIG.202 LIFT CYLINDER (REAR)[VFHM2N5]

(M7020820) リフトシリンダ(リヤー)

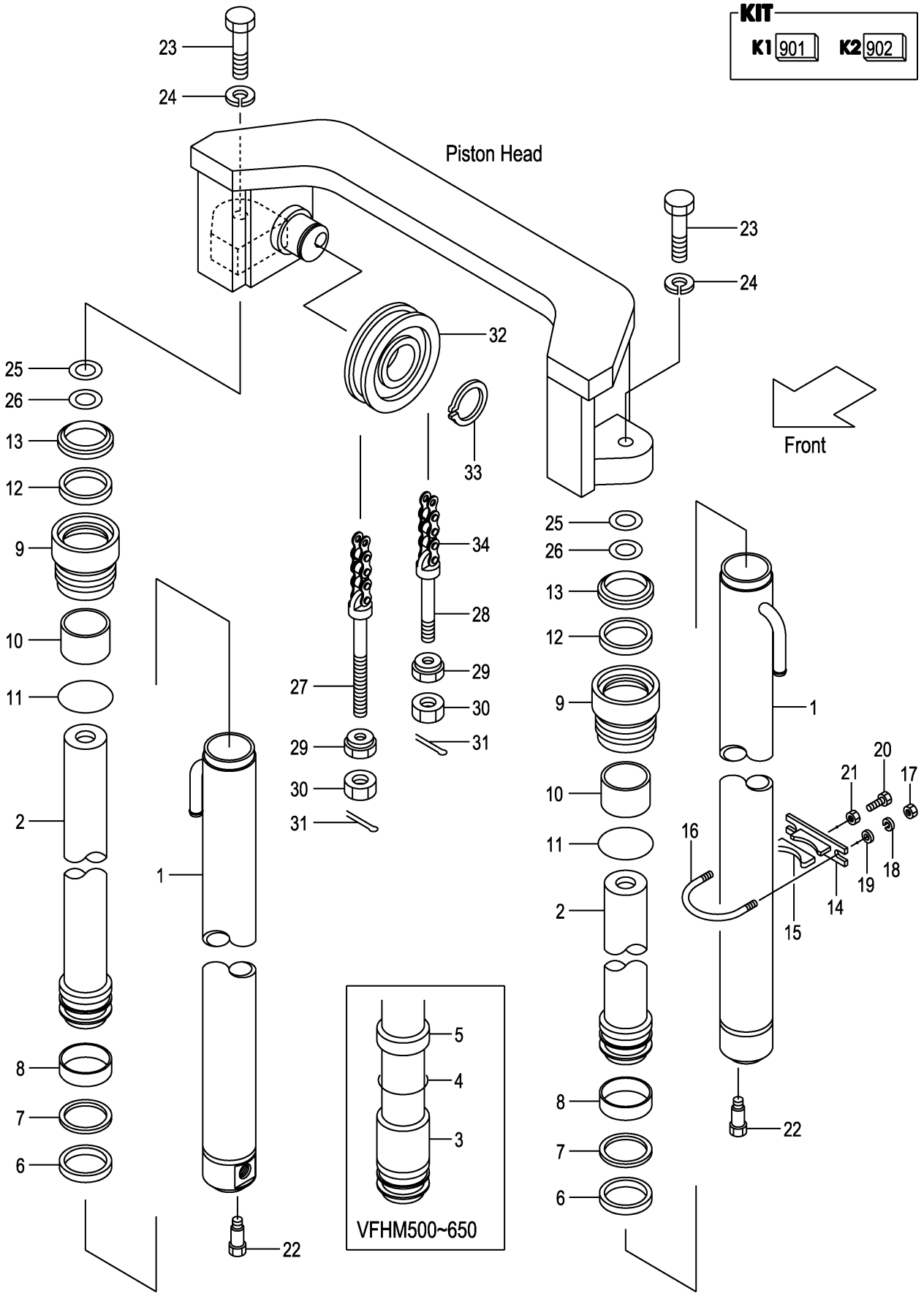

A:VFHM2N5(2T)
B:VFHM2N5(2.5T)

Item No	Part No.	Mark	Description	Req'd	Remarks : Serial No.
-	09001-10069		CHAIN,ROLLER VFHM540 ﾁｪｰﾝ	2	[FC][FCS35][FCS45][FCS55]
-	09001-10071		CHAIN,ROLLER VFHM550 ﾁｪｰﾝ	2	[FC][FCS35][FCS45][FCS55]
-	09001-10077		CHAIN,ROLLER VFHM600 ﾁｪｰﾝ	2	[FC][FCS35][FCS45][FCS55]
-	09001-10083		CHAIN,ROLLER VFHM650 ﾁｪｰﾝ	2	[FC][FCS35][FCS45][FCS55]
-	09001-10089		CHAIN,ROLLER VFHM700 ﾁｪｰﾝ	2	[FC][FCS35][FCS45][FCS55]
-	09001-10095		CHAIN,ROLLER VFHM750 ﾁｪｰﾝ	2	[FC][FCS35][FCS45][FCS55]

FIG.203 MAST PIPING [VFHM2N5]

(M7020830) マストパイピング

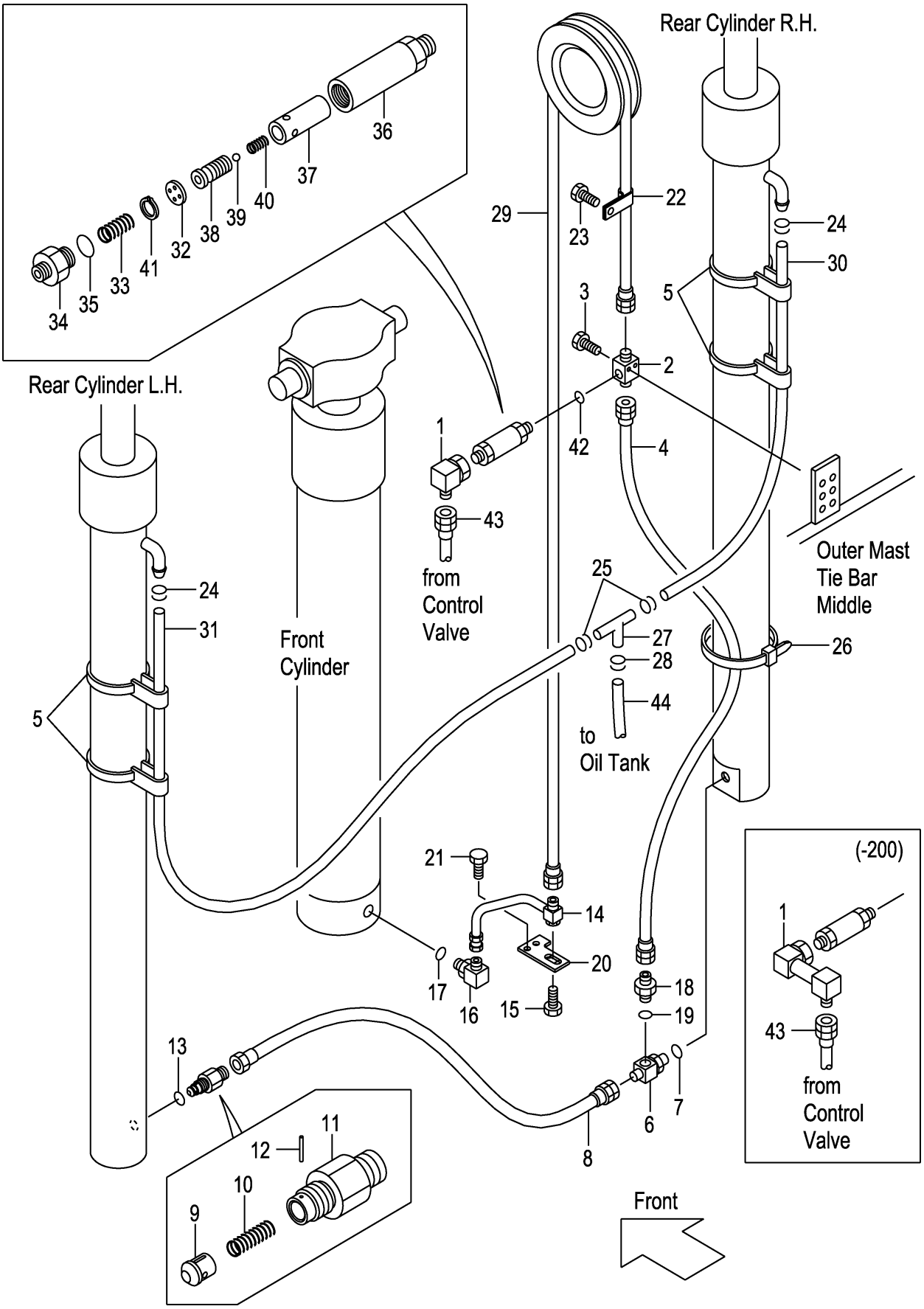

A:VFHM2N5(2T)
B:VFHM2N5(2.5T)

Item No	Part No.	Mark	Description		Req'd	Remarks : Serial No.
1	22N90-90161		PIPE	ﾊﾟｲﾌﾟ	1	MAST NO.1-200
-	62150-14321		ELBOW	ｴﾙﾎﾞ	1	MAST NO.201-
2	229F0-94101		THREE-WAY	ｽﾘｰｳｴｲ	1	
3	01184-10040		BOLT	ﾎﾞﾙﾄ	2	
4	216G0-93151		HOSE	ﾎｰｽ	1	MAST NO.1-200
-	277N0-82021		HOSE	ﾎｰｽ	1	MAST NO.201-
5	22N58-45001		BAND	ﾊﾞﾝﾄﾞ	4	
A1	216G0-93101		THREE-WAY-ASSY	ｽﾘｰｳｪｲｱｯｾﾝ	1	INC.6,7
6	NO PART NO.	#	THREE-WAY	ｽﾘｰｳｴｲ	1	
7	03320-00140		O-RING	Oﾘﾝｸﾞ	1	
8	22N50-92101		HOSE	ﾎｰｽ	1	
A2	234A8-40701		VALVE-ASSY,CUT	ｶｯﾄﾊﾞﾙﾌﾞｱｯｾﾝ	1	INC.9-13
9	234A8-42602		PISTON	ﾋﾟｽﾄﾝ	1	
10	234A8-42611		SPRING	ｽﾌﾟﾘﾝｸﾞ	1	
11	234A8-42622		NIPPLE	ﾆｯﾌﾟﾙ	1	
12	02270-01014		PIN	ﾋﾟﾝ	1	
13	03320-00140		O-RING	Oﾘﾝｸﾞ	1	
14	22N90-90152		PIPE	ﾊﾟｲﾌﾟ	1	
15	01186-10020		BOLT & WASHER	ﾎﾞﾙﾄ&ﾜｯｼｬ	1	
A3	04150-20404		ELBOW-ASSY	ｴﾙﾎﾞｱｯｾﾝ	1	INC.16,17
16	NO PART NO.	#	ELBOW	ｴﾙﾎﾞ	1	
17	03320-00180		O-RING	Oﾘﾝｸﾞ	1	
A4	04134-20404		NIPPLE-ASSY	ﾆｯﾌﾟﾙｱｯｾﾝ	1	INC.18,19
18	NO PART NO.	#	NIPPLE	ﾆｯﾌﾟﾙ	1	
19	03320-00180		O-RING	Oﾘﾝｸﾞ	1	
20	22N50-73191		PLATE	ﾌﾟﾚｰﾄ	1	
21	01185-08020		BOLT	ﾎﾞﾙﾄ	2	
22	26602-42101		CLIP	ｸﾘｯﾌﾟ	1	
23	01184-10012		BOLT	ﾎﾞﾙﾄ	1	
24	24329-46201		CLIP	ｸﾘｯﾌﾟ	2	
25	24329-46201		CLIP	ｸﾘｯﾌﾟ	2	
26	25790-94021		BAND,HOSE	ﾊﾞﾝﾄﾞ	1	
27	53675-55051		THREE-WAY	ｽﾘｰｳｴｲ	1	
28	24329-46201		CLIP	ｸﾘｯﾌﾟ	2	
29	04601-44230		HOSE VFHM360	ﾎｰｽ	1	MAST NO.1-200
-	04601-44221		HOSE VFHM360	ﾎｰｽ	1	MAST NO.201-
-	04601-44255		HOSE VFHM400	ﾎｰｽ	1	MAST NO.1-200
-	04601-44246		HOSE VFHM400	ﾎｰｽ	1	MAST NO.201-
-	04601-44279		HOSE VFHM435	ﾎｰｽ	1	MAST NO.1-200
-	04601-44270		HOSE VFHM435	ﾎｰｽ	1	MAST NO.201-
-	04601-44309		HOSE VFHM480	ﾎｰｽ	1	MAST NO.1-200
-	04601-44299		HOSE VFHM480	ﾎｰｽ	1	MAST NO.201-
-	04601-44328		HOSE VFHM500	ﾎｰｽ	1	MAST NO.1-200
-	04601-44319		HOSE VFHM500	ﾎｰｽ	1	MAST NO.201-
-	04601-44353		HOSE VFHM540	ﾎｰｽ	1	MAST NO.1-200
-	04601-44343		HOSE VFHM540	ﾎｰｽ	1	MAST NO.201-
-	04601-44361		HOSE VFHM550	ﾎｰｽ	1	MAST NO.1-200
-	04601-44351		HOSE VFHM550	ﾎｰｽ	1	MAST NO.201-
-	04601-44397		HOSE VFHM600	ﾎｰｽ	1	MAST NO.1-200
-	04601-44388		HOSE VFHM600	ﾎｰｽ	1	MAST NO.201-

FIG.203 MAST PIPING [VFHM2N5]

(M7020830) マストパイピング

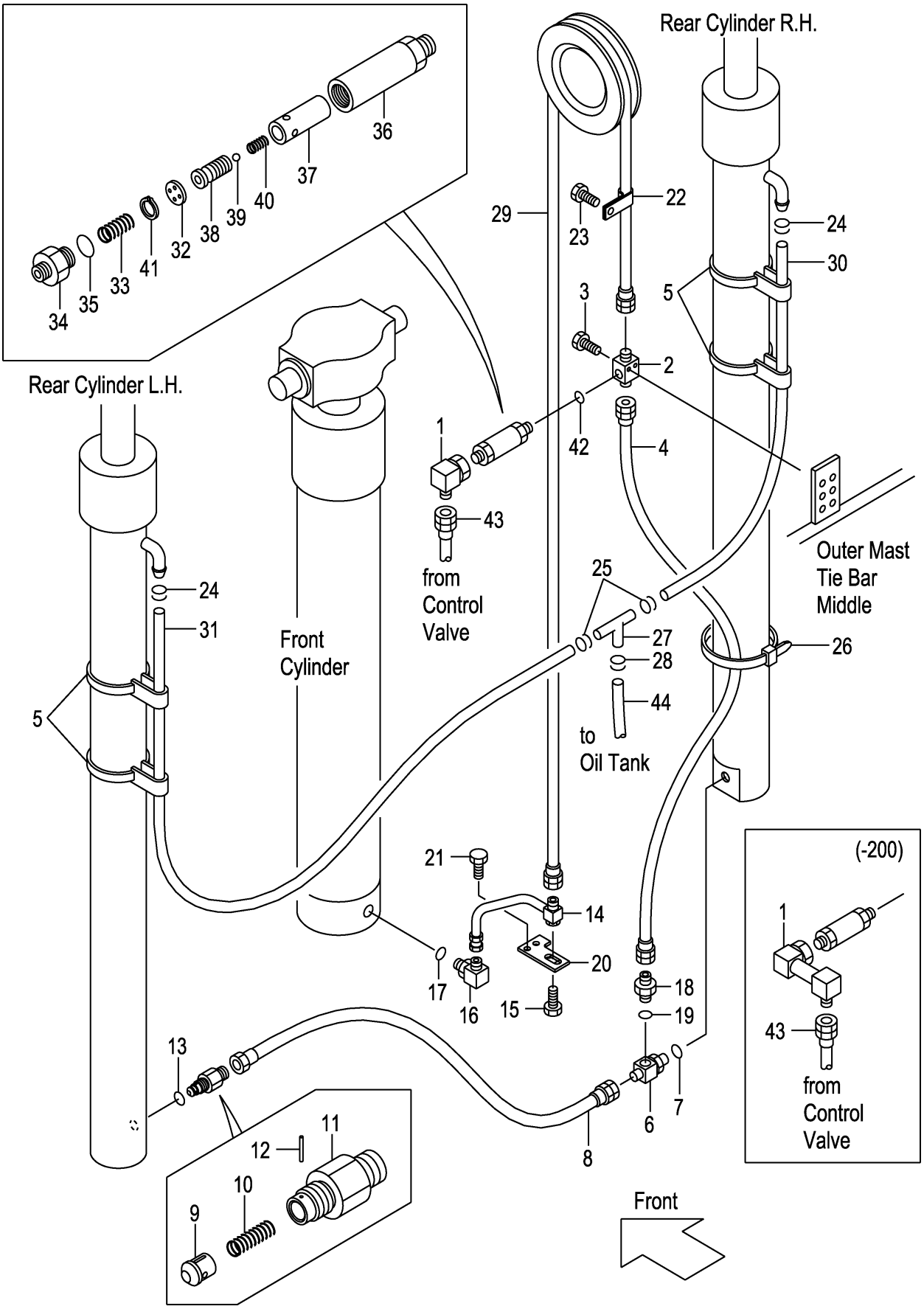

A:VFHM2N5(2T)
B:VFHM2N5(2.5T)

Item No	Part No.	Mark	Description	Req'd	Remarks : Serial No.
-	04601-44439		HOSE VFHM650 ホース	1	MAST NO.1-200
-	04601-44430		HOSE VFHM650 ホース	1	MAST NO.201-
-	04601-44482		HOSE VFHM700 ホース	1	MAST NO.1-200
-	04601-44473		HOSE VFHM700 ホース	1	MAST NO.201-
-	04601-44515		HOSE VFHM750 ホース	1	MAST NO.1-200
-	04601-44505		HOSE VFHM750 ホース	1	MAST NO.201-
30	04710-04135		HOSE,RH VFHM360 ホース	1	MAST NO.1-262
-	24328-40135		HOSE,RH VFHM360 ホース	1	MAST NO.263-
-	04710-04150		HOSE,RH VFHM400 ホース	1	MAST NO.1-262
-	24328-40150		HOSE,RH VFHM400 ホース	1	MAST NO.263-
-	04710-04160		HOSE,RH VFHM435 ホース	1	MAST NO.1-262
-	24328-40160		HOSE,RH VFHM435 ホース	1	MAST NO.263-
-	04710-04175		HOSE,RH VFHM480 ホース	1	MAST NO.1-262
-	24328-40175		HOSE,RH VFHM480 ホース	1	MAST NO.263-
-	04710-04185		HOSE,RH VFHM500 ホース	1	MAST NO.1-262
-	24328-40185		HOSE,RH VFHM500 ホース	1	MAST NO.263-
-	04710-04200		HOSE,RH VFHM540 ホース	1	MAST NO.1-262
-	24328-40200		HOSE,RH VFHM540 ホース	1	MAST NO.263-
-	04710-04205		HOSE,RH VFHM550 ホース	1	MAST NO.1-262
-	24328-40205		HOSE,RH VFHM550 ホース	1	MAST NO.263-
-	04710-04220		HOSE,RH VFHM600 ホース	1	MAST NO.1-262
-	24328-40220		HOSE,RH VFHM600 ホース	1	MAST NO.263-
-	04710-04245		HOSE,RH VFHM650 ホース	1	MAST NO.1-262
-	24328-40245		HOSE,RH VFHM650 ホース	1	MAST NO.263-
-	04710-04265		HOSE,RH VFHM700 ホース	1	MAST NO.1-262
-	24328-40265		HOSE,RH VFHM700 ホース	1	MAST NO.263-
-	04710-04280		HOSE,RH VFHM750 ホース	1	MAST NO.1-262
-	24328-40280		HOSE,RH VFHM750 ホース	1	MAST NO.263-
31	04710-04140		HOSE,LH VFHM360 ホース	1	MAST NO.1-262
-	24328-40140		HOSE,LH VFHM360 ホース	1	MAST NO.263-
-	04710-04155		HOSE,LH VFHM400 ホース	1	MAST NO.1-262
-	24328-40155		HOSE,LH VFHM400 ホース	1	MAST NO.263-
-	04710-04165		HOSE,LH VFHM435 ホース	1	MAST NO.1-262
-	24328-40165		HOSE,LH VFHM435 ホース	1	MAST NO.263-
-	04710-04180		HOSE,LH VFHM480 ホース	1	MAST NO.1-262
-	24328-40180		HOSE,LH VFHM480 ホース	1	MAST NO.263-
-	04710-04190		HOSE,LH VFHM500 ホース	1	MAST NO.1-262
-	24328-40190		HOSE,LH VFHM500 ホース	1	MAST NO.263-
-	04710-04205		HOSE,LH VFHM540 ホース	1	MAST NO.1-262
-	24328-40205		HOSE,LH VFHM540 ホース	1	MAST NO.263-
-	04710-04210		HOSE,LH VFHM550 ホース	1	MAST NO.1-262
-	24328-40210		HOSE,LH VFHM550 ホース	1	MAST NO.263-
-	04710-04225		HOSE,LH VFHM600 ホース	1	MAST NO.1-262
-	24328-40225		HOSE,LH VFHM600 ホース	1	MAST NO.263-
-	04710-04250		HOSE,LH VFHM650 ホース	1	MAST NO.1-262
-	24328-40250		HOSE,LH VFHM650 ホース	1	MAST NO.263-
-	04710-04270		HOSE,LH VFHM700 ホース	1	MAST NO.1-262
-	24328-40270		HOSE,LH VFHM700 ホース	1	MAST NO.263-
-	04710-04285		HOSE,LH VFHM750 ホース	1	MAST NO.1-262
-	24328-40285		HOSE,LH VFHM750 ホース	1	MAST NO.263-

FIG.203 MAST PIPING [VFHM2N5]

(M7020830) マストパイピング

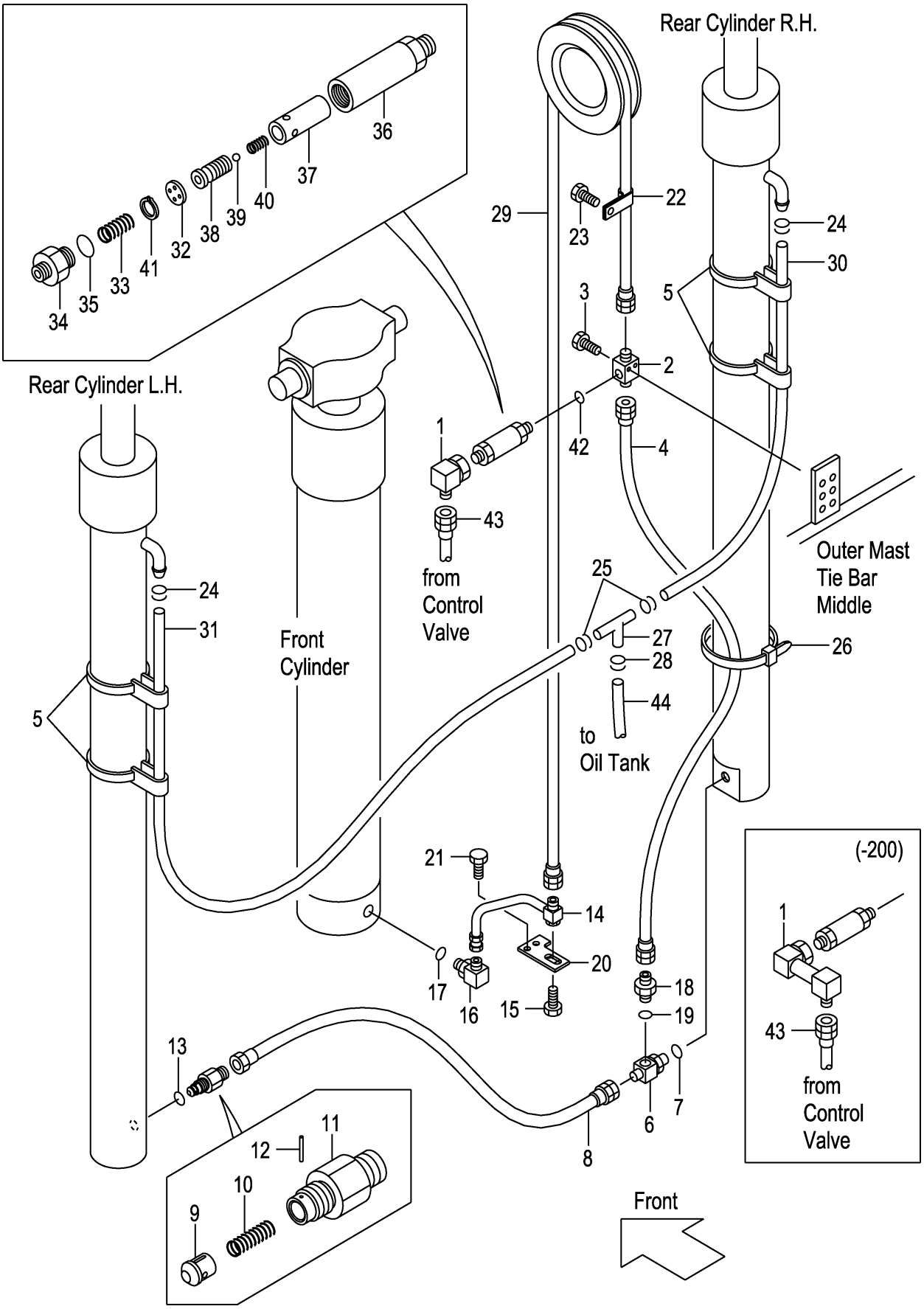

A:VFHM2N5(2T)
B:VFHM2N5(2.5T)

Item No	Part No.	Mark	Description		Req'd	Remarks : Serial No.
A5	234A8-41001		REGULATOR-ASSY,FLOW	ﾌﾛｰﾚｷﾞｭﾚｰﾀｱｯｾﾝ	1	INC.32-41
32	NO PART NO.	#	PLATE	ﾌﾟﾚｰﾄ	1	
33	27979-43101		SPRING	ｽﾌﾟﾘﾝｸﾞ	1	
34	NO PART NO.	#	NIPPLE	ﾆｯﾌﾟﾙ	1	
35	03300-00280		O-RING	Oﾘﾝｸﾞ	1	
36	NO PART NO.	#	CASE	ｹｰｽ	1	
37	NO PART NO.	#	SLEEVE	ｽﾘｰﾌﾞ	1	
38	NO PART NO.	#	PISTON	ﾋﾟｽﾄﾝ	1	
39	24459-42951		BALL,NYLON	ﾎﾞｰﾙ	1	
40	214A8-44151		SPRING	ｽﾌﾟﾘﾝｸﾞ	1	
41	02110-00018		RING,SNAP	ﾘﾝｸﾞ	1	
42	03320-00180		O-RING	Oﾘﾝｸﾞ	1	
43	277P0-92131		HOSE	ﾎｰｽ	1	MAST NO.1-200
-	22N40-82801		HOSE	ﾎｰｽ	1	MAST NO.201-
44	04710-04150		HOSE	ﾎｰｽ	1	MAST NO.1-262
-	24328-40150		HOSE	ﾎｰｽ	1	MAST NO.263-

FIG.204 FORK [VFHM2N4]

(M7028170) フォーク

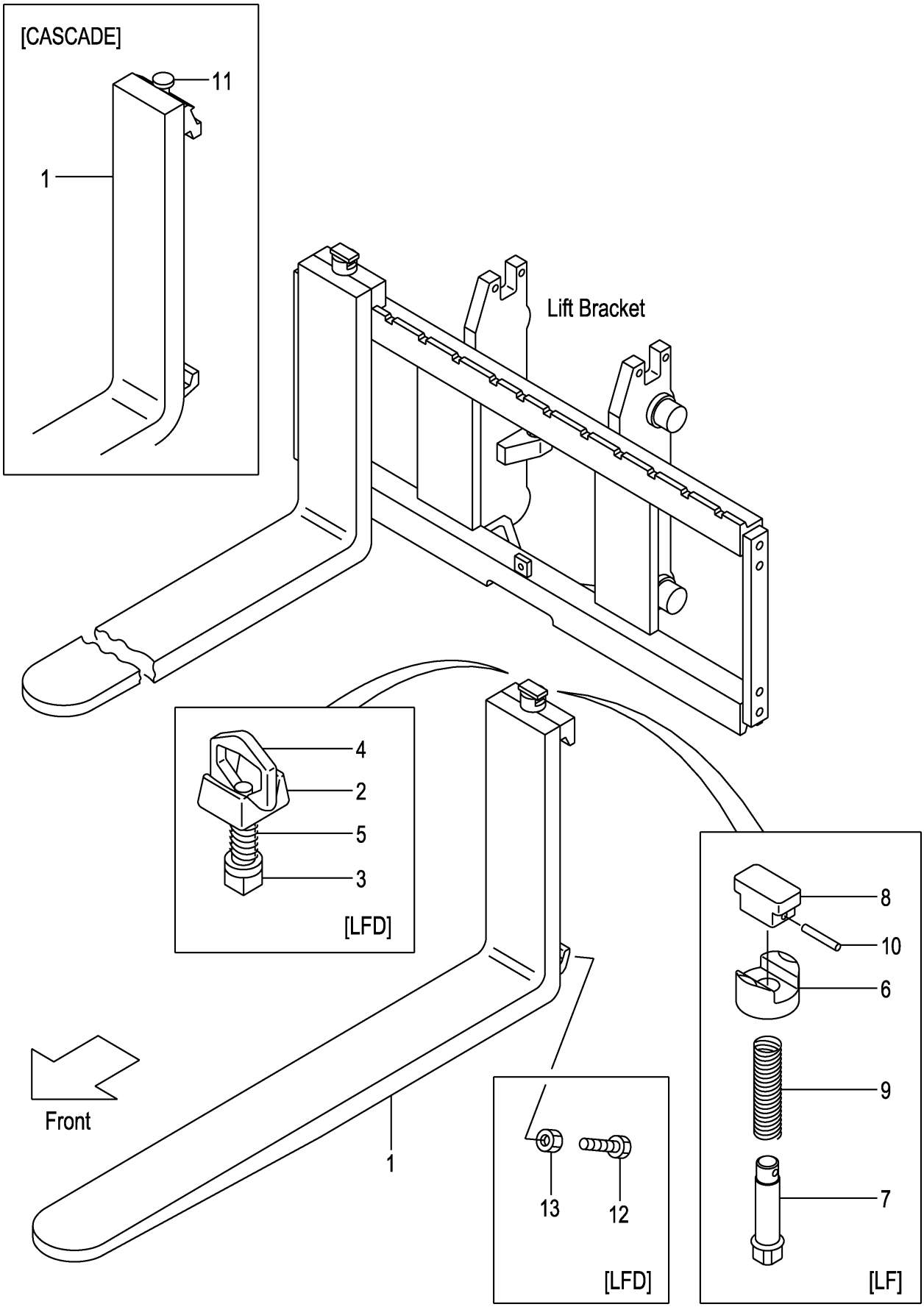

A:VFHM2N4(2T)
B:VFHM2N4(2.5T)

Item No	Part No.	Mark	Description		Req'd	Remarks : Serial No.
1	231A8-10101		FORK	ﾌｫｰｸ	2	A
						(L=920) INC.6-10
-	214A8-10512		FORK	ﾌｫｰｸ	2	B
						(L=1070) INC.6-10
-	214A8-10512		FORK	ﾌｫｰｸ	2	[EX] INC.6-10
-	231A8-10171		FORK	ﾌｫｰｸ	2	A
						[LF090] INC.6-10
-	231F8-10571		FORK	ﾌｫｰｸ	2	B
						[LF090] INC.6-10
-	231A8-10101		FORK	ﾌｫｰｸ	2	A
						[LF092] INC.6-10
-	231F8-10501		FORK	ﾌｫｰｸ	2	B
						[LF092] INC.6-10
-	214A8-10582		FORK	ﾌｫｰｸ	2	[LF100] INC.6-10
-	214A8-10512		FORK	ﾌｫｰｸ	2	[LF107] INC.6-10
-	214A8-10592		FORK	ﾌｫｰｸ	2	[LF110] INC.6-10
-	214A8-10602		FORK	ﾌｫｰｸ	2	[LF120] INC.6-10
-	214A8-10522		FORK	ﾌｫｰｸ	2	[LF122] INC.6-10
-	214A8-10612		FORK	ﾌｫｰｸ	2	[LF130] INC.6-10
-	214A8-10532		FORK	ﾌｫｰｸ	2	[LF137] INC.6-10
-	214A8-10622		FORK	ﾌｫｰｸ	2	[LF140] INC.6-10
-	214A8-10632		FORK	ﾌｫｰｸ	2	[LF150] INC.6-10
-	214A8-10542		FORK	ﾌｫｰｸ	2	[LF152] INC.6-10
-	214A8-10642		FORK	ﾌｫｰｸ	2	[LF160] INC.6-10
-	214A8-10552		FORK	ﾌｫｰｸ	2	[LF167] INC.6-10
-	214A8-10653		FORK	ﾌｫｰｸ	2	[LF170] INC.6-10
-	214A8-10663		FORK	ﾌｫｰｸ	2	[LF180] INC.6-10
-	214A8-10563		FORK	ﾌｫｰｸ	2	[LF182] INC.6-10
-	214A8-10673		FORK	ﾌｫｰｸ	2	[LF190] INC.6-10
-	214A8-10683		FORK	ﾌｫｰｸ	2	[LF200] INC.6-10
-	234A8-10571		FORK	ﾌｫｰｸ	2	[LFD090] INC.2-5
-	234A8-10501		FORK	ﾌｫｰｸ	2	[LFD092] INC.2-5
-	234A8-10581		FORK	ﾌｫｰｸ	2	[LFD100] INC.2-5
-	234A8-10511		FORK	ﾌｫｰｸ	2	[LFD107] INC.2-5
-	234A8-10591		FORK	ﾌｫｰｸ	2	[LFD110] INC.2-5
-	234A8-10601		FORK	ﾌｫｰｸ	2	[LFD120] INC.2-5
-	234A8-10521		FORK	ﾌｫｰｸ	2	[LFD122] INC.2-5
-	234A8-10611		FORK	ﾌｫｰｸ	2	[LFD130] INC.2-5
-	234A8-10531		FORK	ﾌｫｰｸ	2	[LFD137] INC.2-5
-	234A8-10621		FORK	ﾌｫｰｸ	2	[LFD140] INC.2-5
-	234A8-10631		FORK	ﾌｫｰｸ	2	[LFD150] INC.2-5
-	234A8-10541		FORK	ﾌｫｰｸ	2	[LFD152] INC.2-5
-	234A8-10641		FORK	ﾌｫｰｸ	2	[LFD160] INC.2-5
-	234A8-10551		FORK	ﾌｫｰｸ	2	[LFD167] INC.2-5
-	234A8-10652		FORK	ﾌｫｰｸ	2	[LFD170] INC.2-5
-	234A8-10662		FORK	ﾌｫｰｸ	2	[LFD180] INC.2-5
-	234A8-10562		FORK	ﾌｫｰｸ	2	[LFD182] INC.2-5
-	234A8-10672		FORK	ﾌｫｰｸ	2	[LFD190] INC.2-5
-	234A8-10682		FORK	ﾌｫｰｸ	2	[LFD200] INC.2-5
-	22N58-10501		FORK	ﾌｫｰｸ	2	[LF092/CASCADE] INC.11

FIG.204 FORK [VFHM2N4]

(M7028170) フォーク

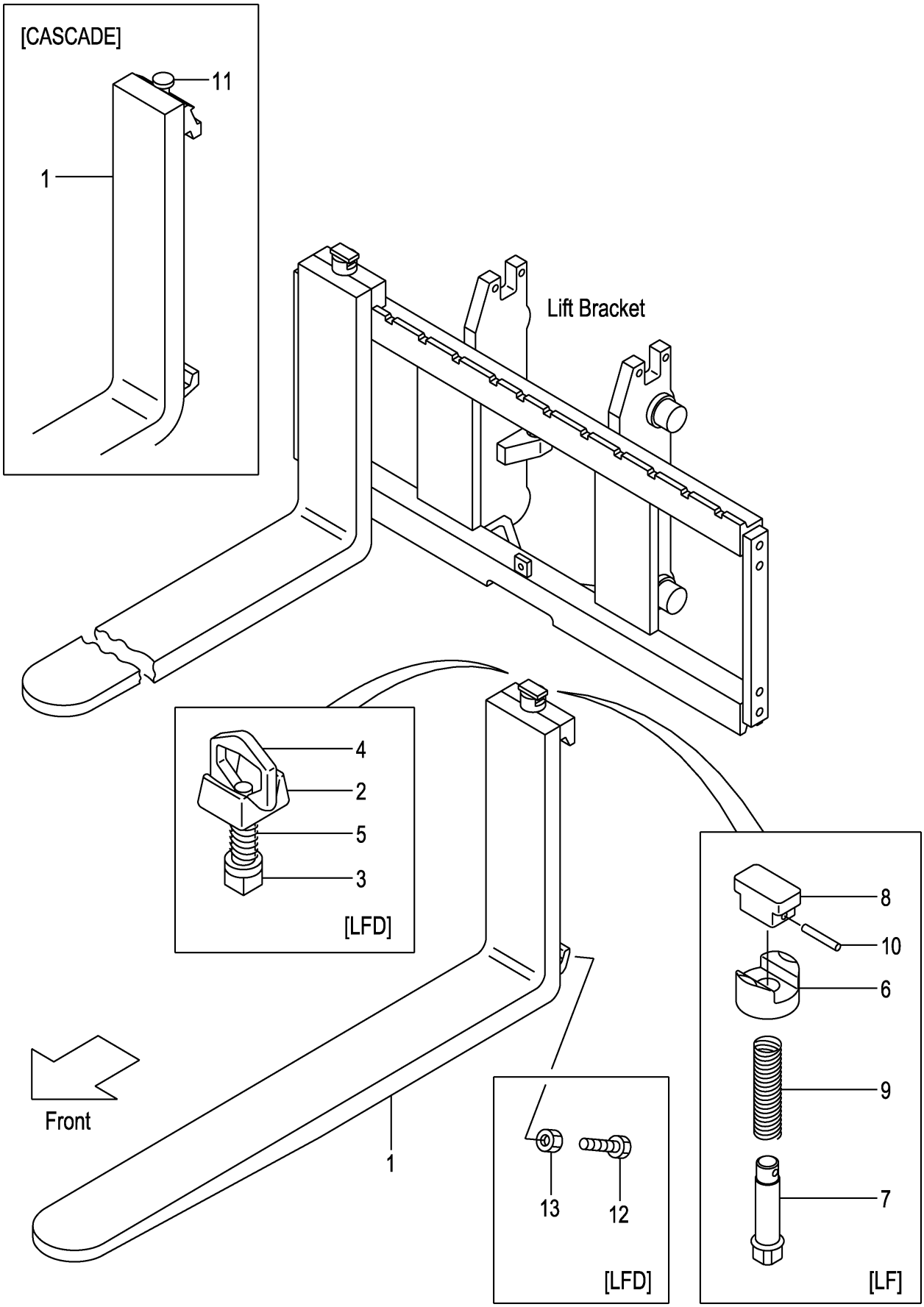

A:VFHM2N4(2T)
B:VFHM2N4(2.5T)

Item No	Part No.	Mark	Description		Req'd	Remarks : Serial No.
-	22N58-10511		FORK	ﾌｫｰｸ	2	[LF107/CASCADE] INC.11
-	22N58-10521		FORK	ﾌｫｰｸ	2	[LF122/CASCADE] INC.11
A1	214A8-11001		STOPPER-ASSY,FORK	ﾌｫｰｸｽﾄｯﾊﾟｱｯｾﾝ	2	[LFD] INC.2-5
2	214A8-12001		HEAD	ﾍｯﾄﾞ	2	[LFD]
3	214A8-12011		STOPPER	ｽﾄｯﾊﾟ	2	[LFD]
4	214A8-12021		HANDLE	ﾊﾝﾄﾞﾙ	2	[LFD]
5	214A8-12031		SPRING	ｽﾌﾟﾘﾝｸﾞ	2	[LFD]
6	216G8-12921		HOLDER	ﾎﾙﾀﾞ	2	[LF]
7	231A8-12001		PIN	ﾋﾟﾝ	2	[LF]
8	231A8-12011		KNOB	ﾉﾌﾞ	2	[LF]
9	231A8-12021		SPRING	ｽﾌﾟﾘﾝｸﾞ	2	[LF]
10	231A8-12031		PIN,SPRING	ﾋﾟﾝ	2	[LF]
11	W-K2PK-M		KIT,PIN,STOPPER	ｷｯﾄ	2	[CASCADE]
12	216G8-12101		BOLT	ﾎﾞﾙﾄ	4	[LFD]
13	01402-00010		NUT	ﾅｯﾄ	4	[LFD]

FIG.205 LIFT BRACKET [VFHM2N4]

(M7020920) ﾘﾌﾄﾌﾞﾗｹｯﾄ

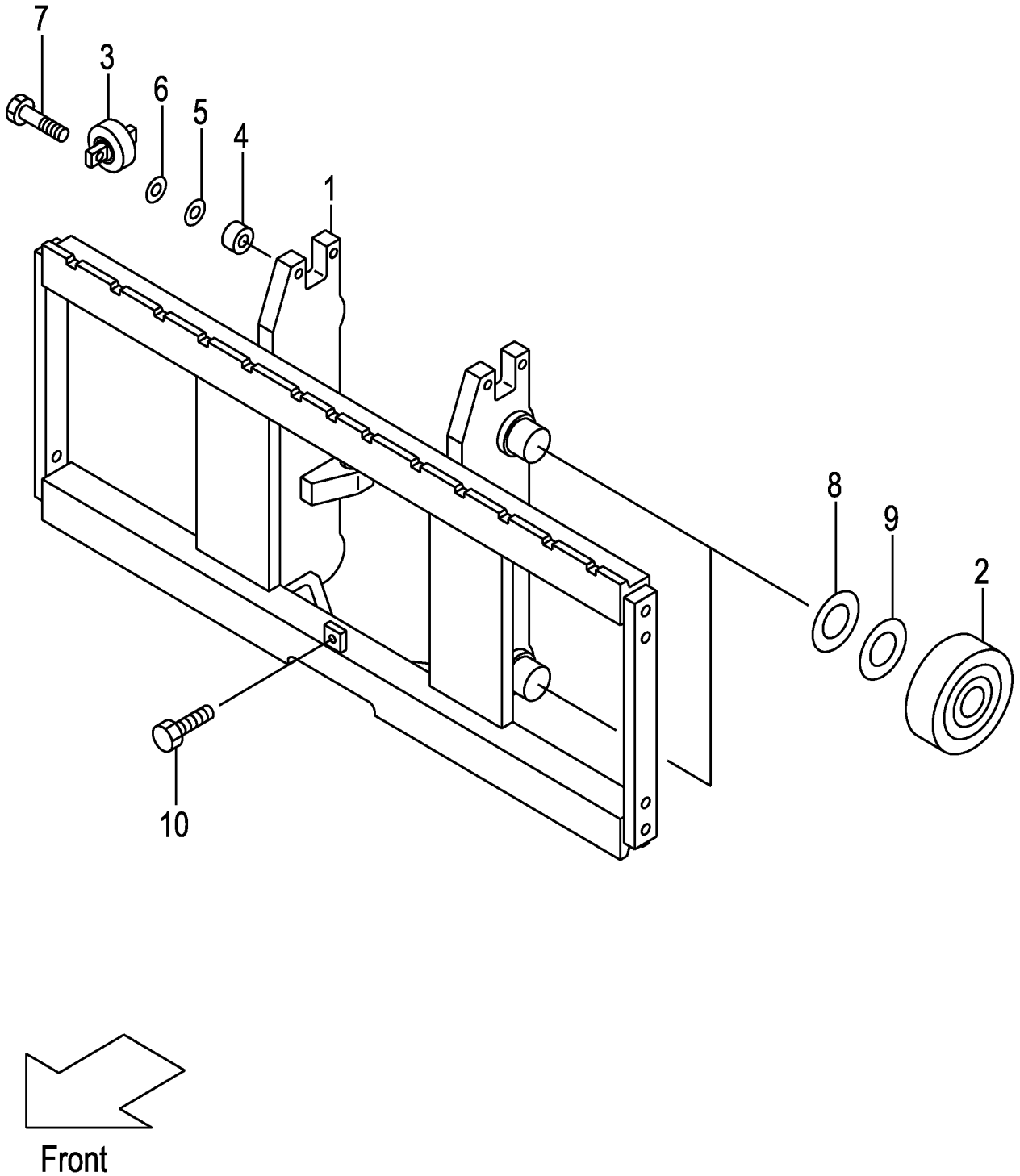

A:VFHM2N4(2T)
B:VFHM2N4(2.5T)

Item No	Part No.	Mark	Description		Req'd	Remarks : Serial No.
1	22N40-90201		BRACKET,LIFT	ﾌﾞﾗｹｯﾄ	1	
2	277P8-22051		ROLLER,END,119.0	ﾛｰﾗ	4	
-	277P8-22061		ROLLER,END,119.5	ﾛｰﾗ	(4)	
3	22N58-32701		ROLLER,SIDE,42.0	ﾛｰﾗ	2	
4	22N58-32711		SPACER	ｽﾍﾟｰｻ	4	
5	22018-30261		SHIM,T-0.2	ｼﾑ	4	
6	22018-30121		SHIM,T-1.0	ｼﾑ	4	
7	01103-10045		BOLT	ﾎﾞﾙﾄ	4	
8	277P8-22071		SHIM,T-0.5	ｼﾑ	5	
9	277P8-22081		SHIM,T-1.0	ｼﾑ	5	
10	01184-12025		BOLT & WASHER	ﾎﾞﾙﾄ&ﾜｯｼｬ	1	

FIG.206 BACKREST [VFHM2N4]

(M7028280) ﾊﾞｯｸﾚｽﾄ

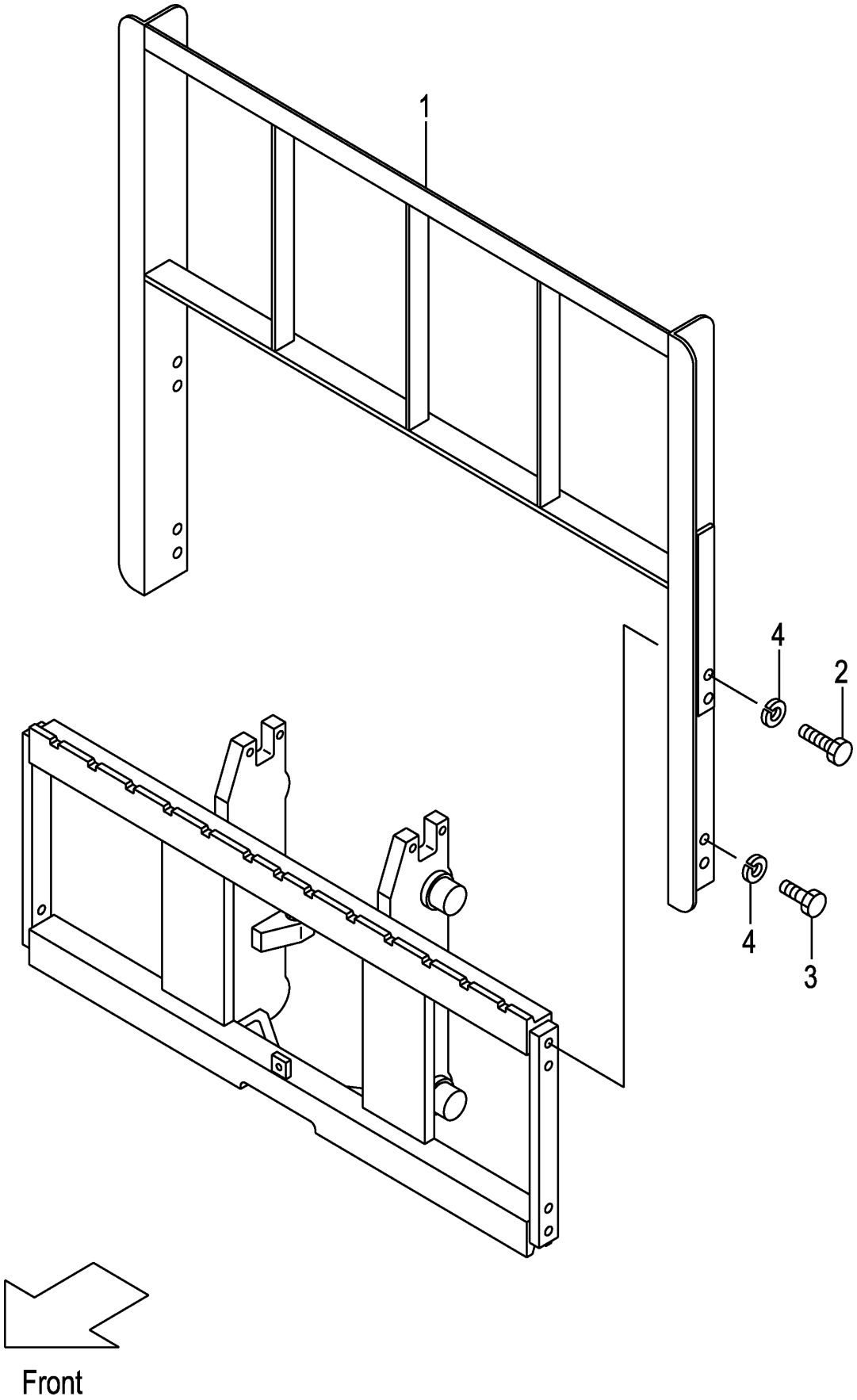

A:VFHM2N4(2T)
B:VFHM2N4(2.5T)

Item No	Part No.	Mark	Description		Req'd	Remarks : Serial No.
1	234A8-22202		BACKREST	ﾊﾞｯｸﾚｽﾄ	1	
2	01100-14030		BOLT	ﾎﾞﾙﾄ	4	
3	01100-14025		BOLT	ﾎﾞﾙﾄ	4	
4	02010-00014		WASHER	ﾜｯｼｬ	8	

FIG.207 MAST [VFHM2N4]

(M7020730) マスト

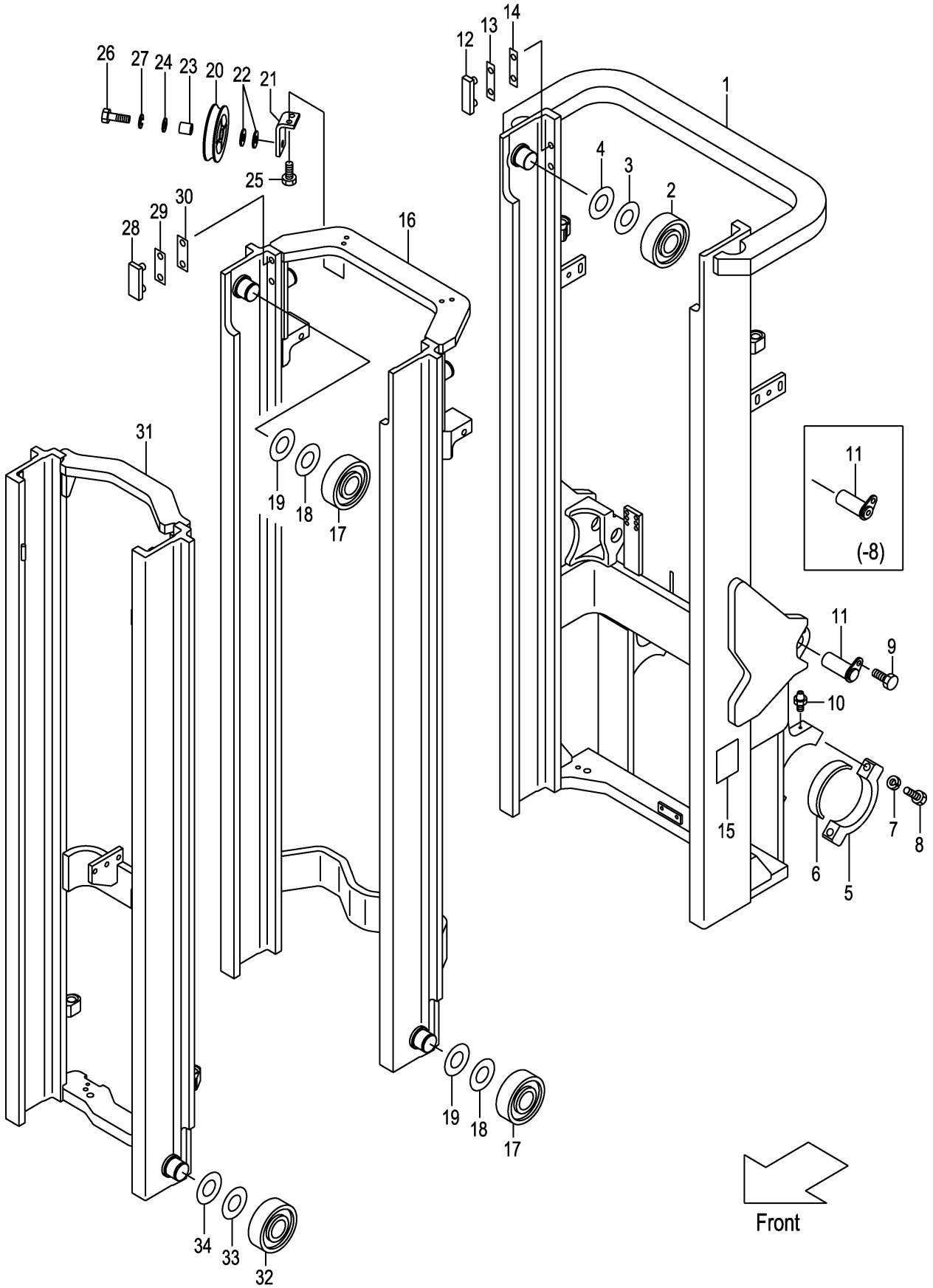

A:VFHM2N4(2T)
B:VFHM2N4(2.5T)

Item No	Part No.	Mark	Description		Req'd	Remarks : Serial No.
1	22N40-70201		MAST,OUTER VFHM435	ｱｳﾀﾏｽﾄ	1	
-	22N40-70231		MAST,OUTER VFHM480	ｱｳﾀﾏｽﾄ	1	
-	22N40-70241		MAST,OUTER VFHM500	ｱｳﾀﾏｽﾄ	1	
-	22N40-70251		MAST,OUTER VFHM540	ｱｳﾀﾏｽﾄ	1	
-	22N40-70261		MAST,OUTER VFHM550	ｱｳﾀﾏｽﾄ	1	
-	52N53-91901		MAST,OUTER VFHM435	ｱｳﾀﾏｽﾄ	1	[EXR][RW][HC]
-	52N53-91931		MAST,OUTER VFHM480	ｱｳﾀﾏｽﾄ	1	[EXR][RW][HC]
-	52N53-91941		MAST,OUTER VFHM500	ｱｳﾀﾏｽﾄ	1	[EXR][RW][HC]
-	52N53-91951		MAST,OUTER VFHM540	ｱｳﾀﾏｽﾄ	1	[EXR][RW][HC]
-	52N53-91961		MAST,OUTER VFHM550	ｱｳﾀﾏｽﾄ	1	[EXR][RW][HC]
2	277P8-22051		ROLLER,END,119.0	ﾛｰﾗ	2	
3	277P8-22071		SHIM,T-0.5	ｼﾑ	12	
4	277P8-22081		SHIM,T-1.0	ｼﾑ	12	
5	277P8-32701		CAP	ｷｬｯﾌﾟ	2	
6	214A8-02201		BUSHING	ﾌﾞｯｼﾝｸﾞ	2	
7	01103-16065		BOLT	ﾎﾞﾙﾄ	4	
8	02011-00016		WASHER	ﾜｯｼｬ	4	
9	216G8-52301		BOLT & WASHER	ﾎﾞﾙﾄ&ﾜｯｼｬ	2	
10	04901-00100		FITTING	ﾌｨｯﾃｨﾝｸﾞ	2	
11	272K8-52201		PIN	ﾋﾟﾝ	2	MAST NO.1-8
-	22N58-52501		PIN	ﾋﾟﾝ	2	MAST NO.9-
12	216G8-33401		SLIPPER	ｽﾘｯﾊﾟ	2	
13	216G8-33361		SHIM,T-0.5	ｼﾑ	8	
14	216G8-33371		SHIM,T-1.0	ｼﾑ	4	
15	23678-06002		PLATE,NAME	ﾌﾟﾚｰﾄ	1	
16	22N40-70401		MAST,MIDDLE VFHM435	ﾐﾄﾞﾙﾏｽﾄ	1	
-	22N40-70431		MAST,MIDDLE VFHM480	ﾐﾄﾞﾙﾏｽﾄ	1	
-	22N40-70441		MAST,MIDDLE VFHM500	ﾐﾄﾞﾙﾏｽﾄ	1	
-	22N40-70451		MAST,MIDDLE VFHM540	ﾐﾄﾞﾙﾏｽﾄ	1	
-	22N40-70461		MAST,MIDDLE VFHM550	ﾐﾄﾞﾙﾏｽﾄ	1	
17	277P8-22051		ROLLER,END,119.0	ﾛｰﾗ	4	
-	277P8-22061		ROLLER,END,119.5	ﾛｰﾗ	(2)	
18	277P8-22071		SHIM,T-0.5	ｼﾑ	15	
19	277P8-22081		SHIM,T-1.0	ｼﾑ	15	
20	63130-15301		PULLEY	ﾌﾟｰﾘ	1	
21	22N40-72191		BRACKET	ﾌﾞﾗｹｯﾄ	1	
22	62050-12331		SPACER	ｽﾍﾟｰｻ	2	
23	214A0-72701		COLLAR	ｶﾗｰ	1	
24	02000-00016		WASHER	ﾜｯｼｬ	1	
25	01184-10025		BOLT	ﾎﾞﾙﾄ	2	
26	01100-16050		BOLT	ﾎﾞﾙﾄ	1	
27	02010-00016		WASHER	ﾜｯｼｬ	1	
28	216G8-33351		SLIPPER	ｽﾘｯﾊﾟ	2	
29	216G8-33361		SHIM,T-0.5	ｼﾑ	4	
30	216G8-33371		SHIM,T-1.0	ｼﾑ	8	
31	22N40-70601		MAST,INNER VFHM435	ｲﾝﾅﾏｽﾄ	1	
-	22N40-70631		MAST,INNER VFHM480	ｲﾝﾅﾏｽﾄ	1	
-	22N40-70641		MAST,INNER VFHM500	ｲﾝﾅﾏｽﾄ	1	
-	22N40-70651		MAST,INNER VFHM540	ｲﾝﾅﾏｽﾄ	1	
-	22N40-70661		MAST,INNER VFHM550	ｲﾝﾅﾏｽﾄ	1	

FIG.207 MAST [VFHM2N4]

(M7020730) マスト

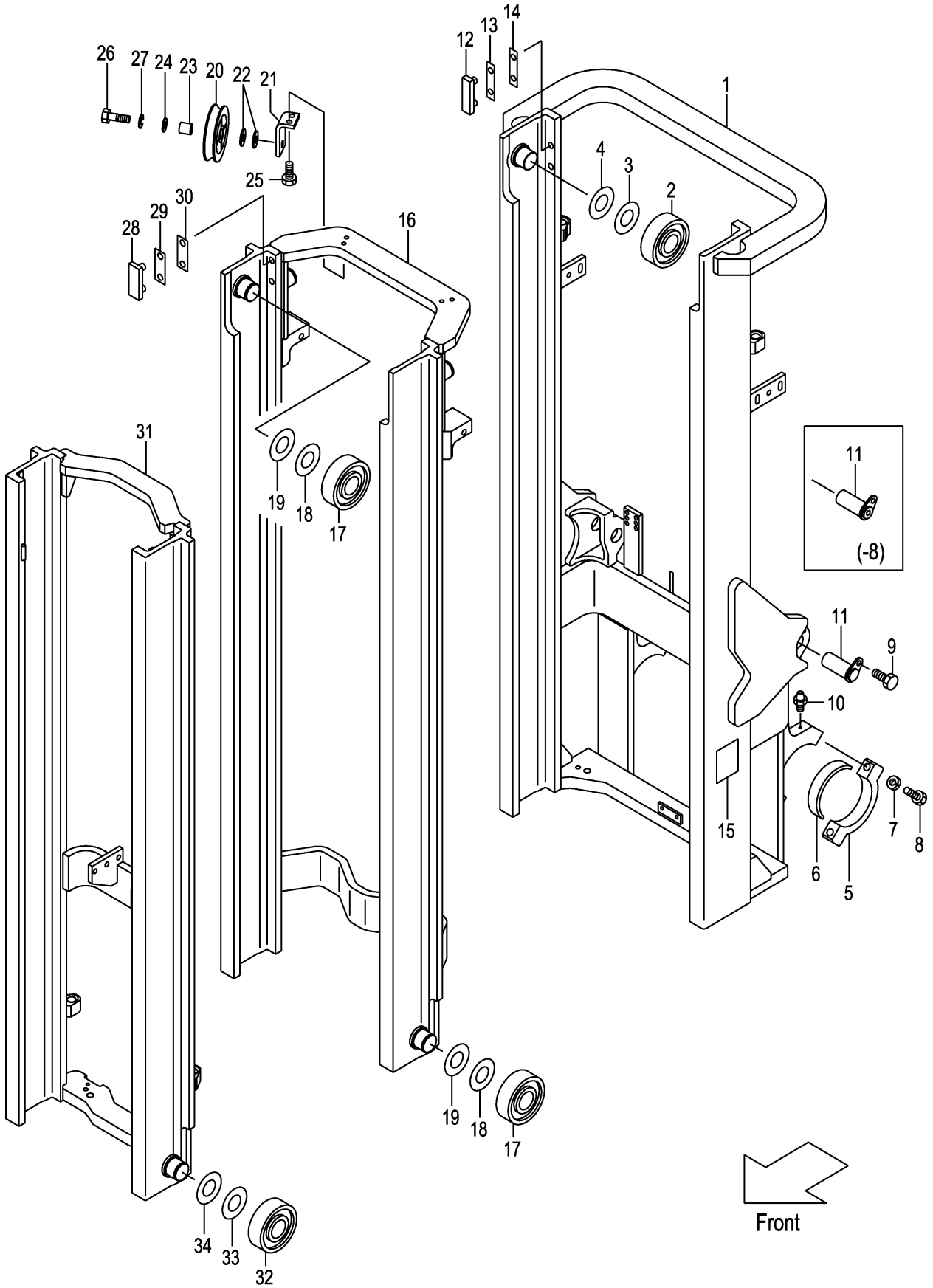

A:VFHM2N4(2T)
B:VFHM2N4(2.5T)

Item No	Part No.	Mark	Description	Req'd	Remarks : Serial No.
32	277P8-22051		ROLLER,END,119.0 ﾛｰﾗ	2	
-	277P8-22061		ROLLER,END,119.5 ﾛｰﾗ	(2)	
33	277P8-22071		SHIM,T-0.5 ｼﾑ	12	
34	277P8-22081		SHIM,T-1.0 ｼﾑ	12	

FIG.208 LIFT CYLINDER(FRONT)[VFHM2N4]

(M7020840) リフトシリンダ(フロント)

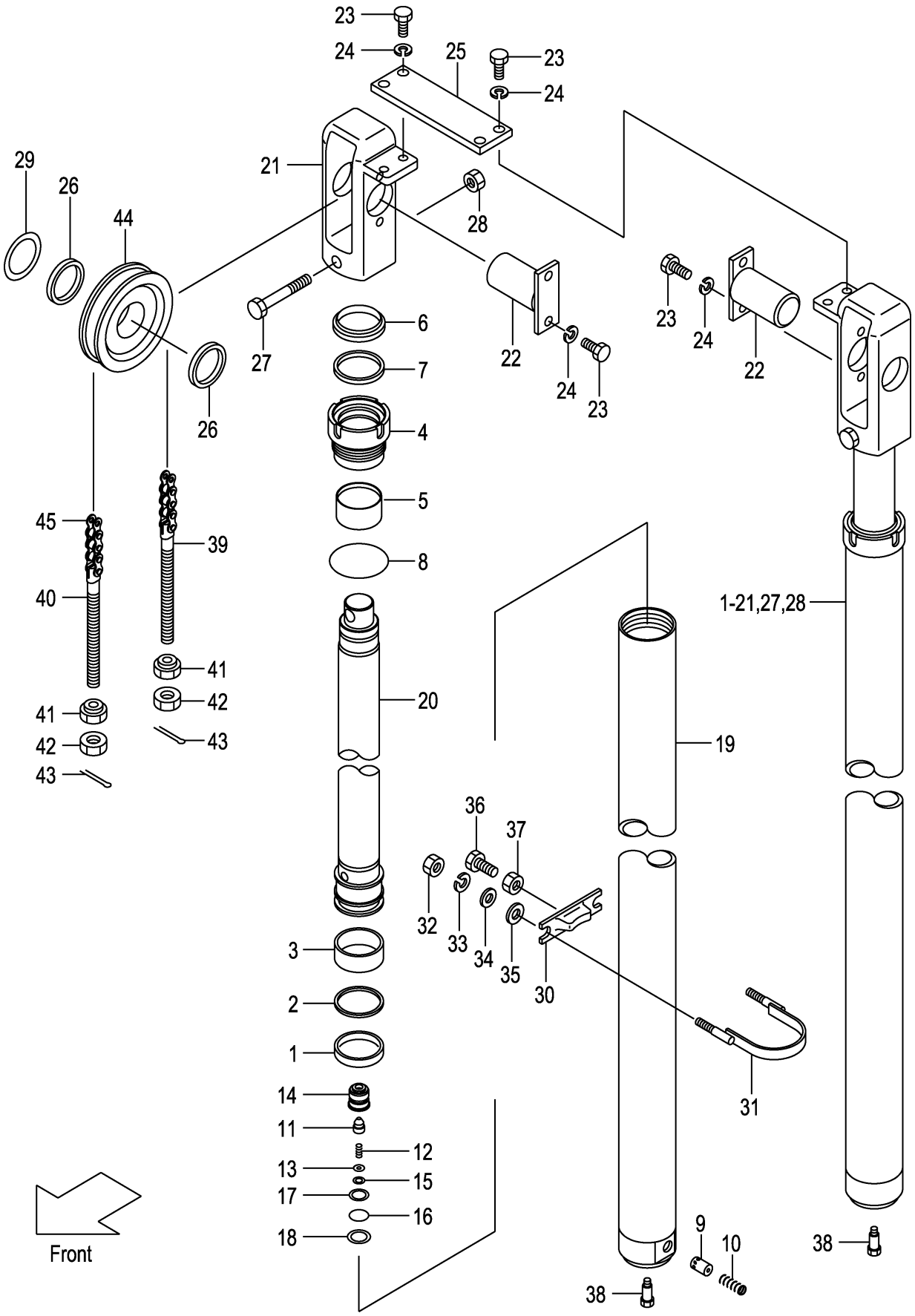

A:VFHM2N4(2T)
B:VFHM2N4(2.5T)

Item No	Part No.	Mark	Description		Req'd	Remarks : Serial No.
A1	22N40-50201		CYL-ASSY,LIFT VFHM435	ﾘﾌﾄｼﾘﾝﾀﾞｱｯｾﾝ	2	INC.1-20
-	22N40-50221		CYL-ASSY,LIFT VFHM480	ﾘﾌﾄｼﾘﾝﾀﾞｱｯｾﾝ	2	INC.1-20
-	22N40-50231		CYL-ASSY,LIFT VFHM500	ﾘﾌﾄｼﾘﾝﾀﾞｱｯｾﾝ	2	INC.1-20
-	22N40-50261		CYL-ASSY,LIFT VFHM540	ﾘﾌﾄｼﾘﾝﾀﾞｱｯｾﾝ	2	INC.1-20
-	22N40-80261		CYL-ASSY,LIFT VFHM550	ﾘﾌﾄｼﾘﾝﾀﾞｱｯｾﾝ	2	INC.1-20
1	27978-42411		PACKING	ﾊﾟｯｷﾝｸﾞ	2	
2	24459-42291		RING,BACK-UP	ﾘﾝｸﾞ	2	
3	27978-42421		WEARING	ｳｴｱﾘﾝｸﾞ	2	
4	232L8-42601		CAP,CYL	ｷｬｯﾌﾟ	2	
5	232L8-42621		BUSHING	ﾌﾞｯｼﾝｸﾞ	2	
6	214J8-46001		SEAL,DUST	ｼｰﾙ	2	
7	214J8-42721		PACKING	ﾊﾟｯｷﾝｸﾞ	2	
8	232L8-42631		O-RING	Oﾘﾝｸﾞ	2	
9	24320-55001		PISTON	ﾋﾟｽﾄﾝ	2	
10	27978-42601		SPRING	ｽﾌﾟﾘﾝｸﾞ	2	
A2	214T0-83501		VALVE-ASSY,CHECK	ﾁｪｯｸﾊﾞﾙﾌﾞｱｯｾﾝ	2	INC.11-15
11	214T0-83521		POPPET	ﾎﾟﾍﾟｯﾄ	2	
12	214T0-83541		SPRING	ｽﾌﾟﾘﾝｸﾞ	2	
13	214T0-83531		PLATE	ﾌﾟﾚｰﾄ	2	
14	214T0-83511		CASE	ｹｰｽ	2	
15	02110-00014		RING,SNAP	ﾘﾝｸﾞ	2	
16	03320-00210		O-RING	Oﾘﾝｸﾞ	2	
17	03360-00210		RING,BACK-UP	ﾘﾝｸﾞ	2	
18	02110-00028		RING,SNAP	ﾘﾝｸﾞ	2	
19	22N40-50601		BODY,CYL VFHM435	ﾎﾞﾃﾞｨ	2	
-	22N40-50621		BODY,CYL VFHM480	ﾎﾞﾃﾞｨ	2	
-	22N40-50631		BODY,CYL VFHM500	ﾎﾞﾃﾞｨ	2	
-	22N40-50661		BODY,CYL VFHM540	ﾎﾞﾃﾞｨ	2	
-	22N40-80661		BODY,CYL VFHM550	ﾎﾞﾃﾞｨ	2	
20	22N40-50401		ROD,PISTON VFHM435	ﾛｯﾄﾞ	2	
-	22N40-50421		ROD,PISTON VFHM480	ﾛｯﾄﾞ	2	
-	22N40-50431		ROD,PISTON VFHM500	ﾛｯﾄﾞ	2	
-	22N40-50461		ROD,PISTON VFHM540	ﾛｯﾄﾞ	2	
-	22N40-80461		ROD,PISTON VFHM550	ﾛｯﾄﾞ	2	
21	22N40-74301		HEAD,PISTON	ﾍｯﾄﾞ	2	
22	22N40-74501		PIN,ANCHOR	ﾋﾟﾝ	2	
23	01103-10020		BOLT	ﾎﾞﾙﾄ	8	
24	02011-00010		WASHER	ﾜｯｼｬ	8	
25	22N40-74311		PLATE	ﾌﾟﾚｰﾄ	1	
26	229G0-52251		SPACER	ｽﾍﾟｰｻ	4	
27	01100-12080		BOLT	ﾎﾞﾙﾄ	2	
28	01402-00012		NUT	ﾅｯﾄ	2	
29	224T8-52291		SHIM,T-1.0	ｼﾑ	2	
30	22N58-43011		SUPPORT,CYL	ｻﾎﾟｰﾄ	2	
31	22N40-72311		U-BOLT	Uﾎﾞﾙﾄ	2	
32	278R0-63151		NUT	ﾅｯﾄ	4	
33	02010-00008		WASHER	ﾜｯｼｬ	4	
34	02000-00008		WASHER	ﾜｯｼｬ	4	
35	02000-00010		WASHER	ﾜｯｼｬ	4	
36	232A8-42201		BOLT	ﾎﾞﾙﾄ	2	

FIG.208 LIFT CYLINDER(FRONT)[VFHM2N4]

(M7020840) リフトシリンダ(フロント)

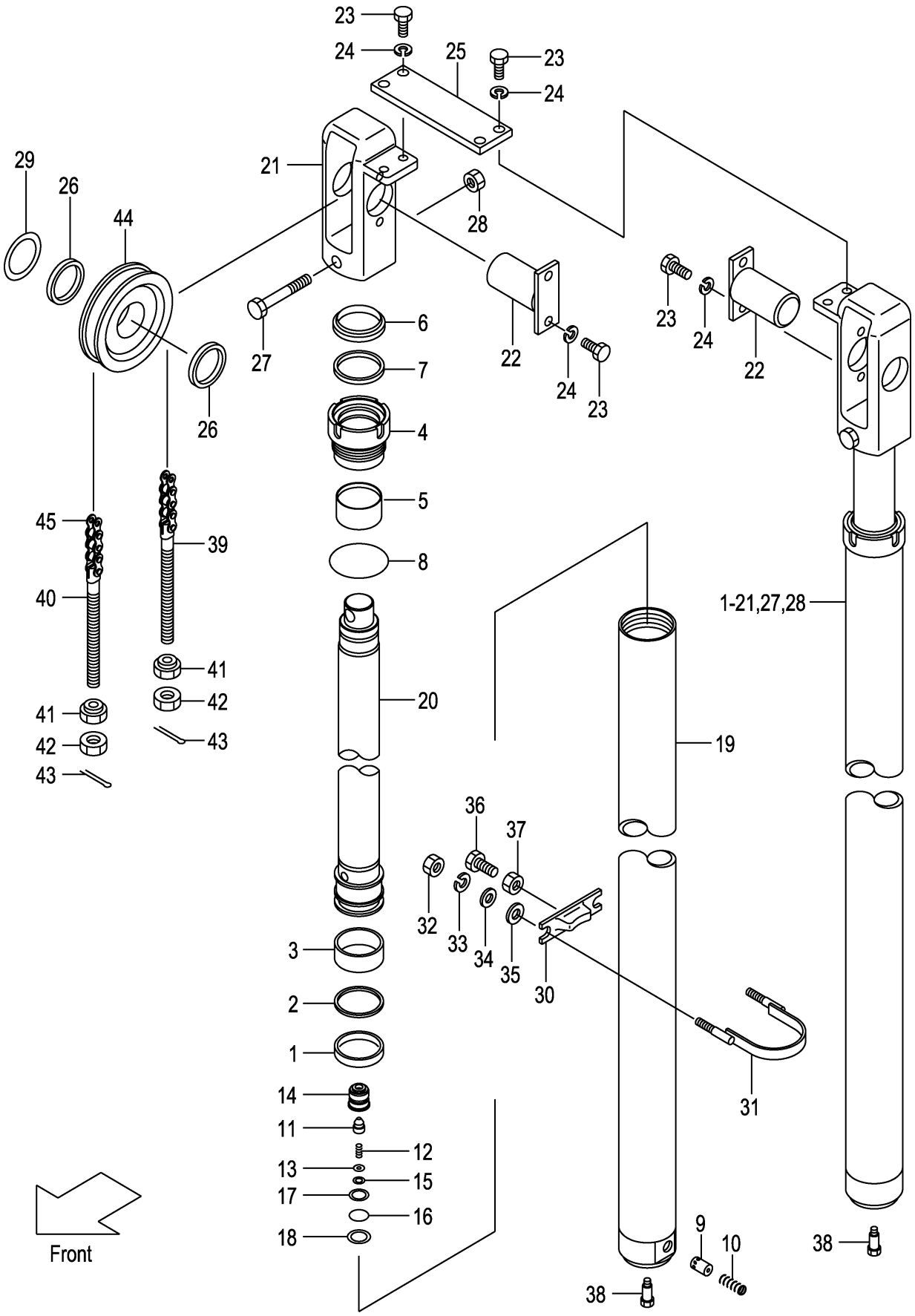

A:VFHM2N4(2T)
B:VFHM2N4(2.5T)

Item No	Part No.	Mark	Description		Req'd	Remarks : Serial No.
37	234A8-42571		NUT	ﾅｯﾄ	2	
38	214A8-42661		BOLT	ﾎﾞﾙﾄ	2	
39	52672-72231		PIN,ANCHOR	ﾋﾟﾝ	2	
40	23679-45801		PIN,ANCHOR	ﾋﾟﾝ	2	
41	22218-40191		NUT	ﾅｯﾄ	4	
42	01400-00018		NUT	ﾅｯﾄ	4	
43	02200-03030		PIN	ﾋﾟﾝ	4	
44	234A8-43501		SHEAVE	ｼｰﾌﾞ	2	
45	22679-45731		CHAIN,LEAF VFHM435	ﾁｪｰﾝ	2	
-	22679-45811		CHAIN,LEAF VFHM480	ﾁｪｰﾝ	2	
-	22679-45851		CHAIN,LEAF VFHM500	ﾁｪｰﾝ	2	
-	22679-45931		CHAIN,LEAF VFHM540	ﾁｪｰﾝ	2	
-	22679-45951		CHAIN,LEAF VFHM550	ﾁｪｰﾝ	2	

FIG.209 LIFT CYLINDER(REAR)[VFHM2N4]

(M7020850) リフトシリンダ(リヤー)

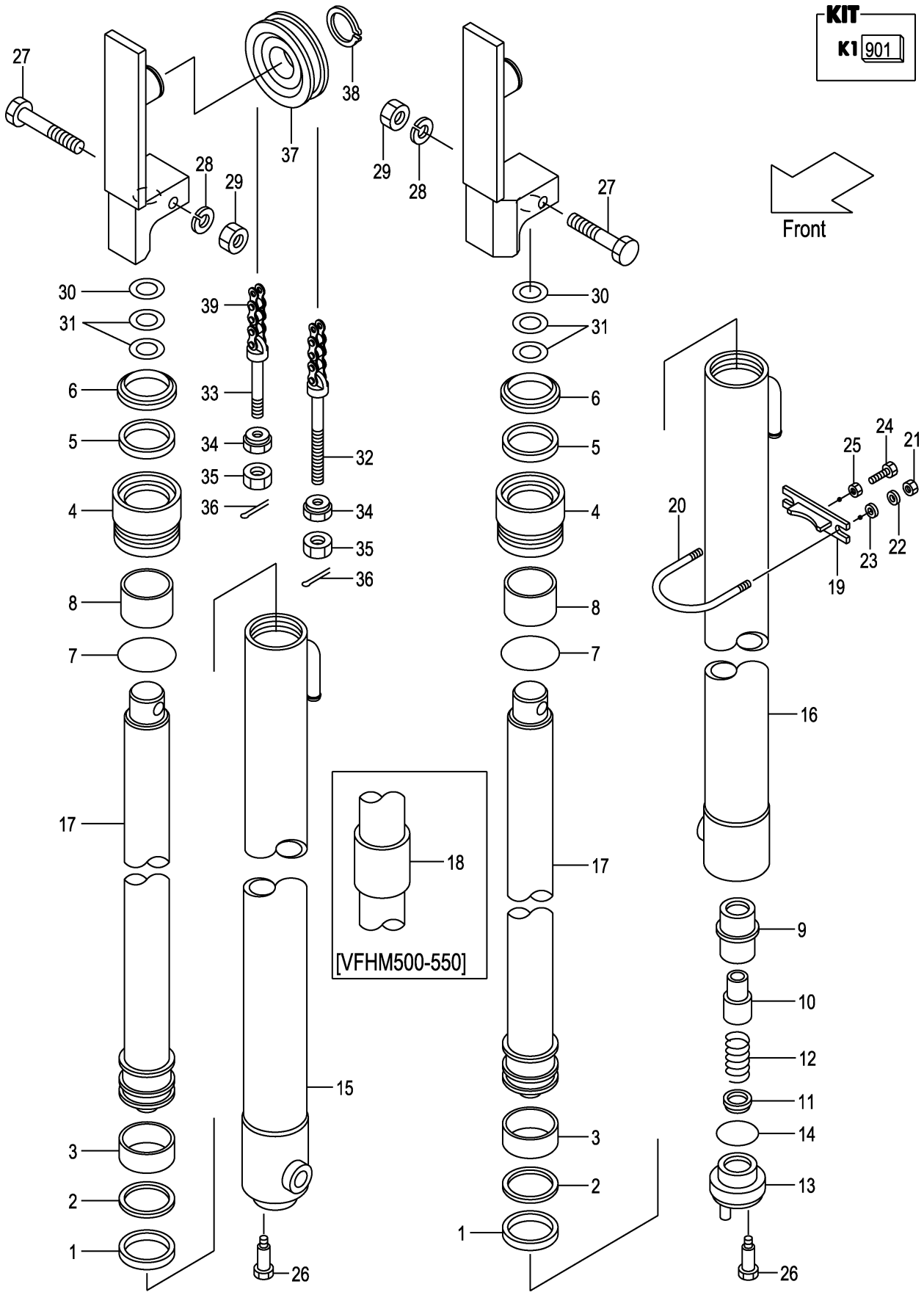

A:VFHM2N4(2T)
B:VFHM2N4(2.5T)

Item No	Part No.	Mark	Description		Req'd	Remarks : Serial No.
A1	277P0-81702		CYL-ASSY,LIFT,RH VFHM435	ﾘﾌﾄｼﾘﾝﾀﾞｱｯｾﾝ	1	INC.1-8,15,17
-	277P0-81732		CYL-ASSY,LIFT,RH VFHM480	ﾘﾌﾄｼﾘﾝﾀﾞｱｯｾﾝ	1	INC.1-8,15,17
-	277P0-81742		CYL-ASSY,LIFT,RH VFHM500	ﾘﾌﾄｼﾘﾝﾀﾞｱｯｾﾝ	1	INC.1-8,15,17,18
-	277P0-81752		CYL-ASSY,LIFT,RH VFHM540	ﾘﾌﾄｼﾘﾝﾀﾞｱｯｾﾝ	1	INC.1-8,15,17,18
-	277P0-81762		CYL-ASSY,LIFT,RH VFHM550	ﾘﾌﾄｼﾘﾝﾀﾞｱｯｾﾝ	1	INC.1-8,15,17,18
A2	277P0-81902		CYL-ASSY,LIFT,LH VFHM435	ﾘﾌﾄｼﾘﾝﾀﾞｱｯｾﾝ	1	INC.1-14,16,17
-	277P0-81932		CYL-ASSY,LIFT,LH VFHM480	ﾘﾌﾄｼﾘﾝﾀﾞｱｯｾﾝ	1	INC.1-14,16,17
-	277P0-81942		CYL-ASSY,LIFT,LH VFHM500	ﾘﾌﾄｼﾘﾝﾀﾞｱｯｾﾝ	1	INC.1-14,16,17,18
-	277P0-81952		CYL-ASSY,LIFT,LH VFHM540	ﾘﾌﾄｼﾘﾝﾀﾞｱｯｾﾝ	1	INC.1-14,16,17,18
-	277P0-81962		CYL-ASSY,LIFT,LH VFHM550	ﾘﾌﾄｼﾘﾝﾀﾞｱｯｾﾝ	1	INC.1-14,16,17,18
901	277P0-89811	K1	KIT,OVERHAUL	ｵｰﾊﾞﾎｰﾙｷｯﾄ	2	INC.1-3,5-7
1	23650-83521	*	PACKING	ﾊﾟｯｷﾝｸﾞ	2	
2	23650-83531	*	RING,BACK-UP	ﾘﾝｸﾞ	2	
3	27970-53141	*	WEARING	ｳｴｱﾘﾝｸﾞ	2	
4	232A8-42601		CAP,CYL	ｷｬｯﾌﾟ	2	
5	214A8-42721	*	PACKING	ﾊﾟｯｷﾝｸﾞ	2	
6	214A8-46001	*	SEAL,DUST	ｼｰﾙ	2	
7	232A8-42631	*	O-RING	Oﾘﾝｸﾞ	2	
8	232A8-42621		BUSHING	ﾌﾞｯｼﾝｸﾞ	2	
9	53658-43021		SLEEVE	ｽﾘｰﾌﾞ	1	(LH)
10	53658-43011		PISTON	ﾋﾟｽﾄﾝ	1	(LH)
11	53658-43001		VALVE,CHECK	ﾊﾞﾙﾌﾞ	1	(LH)
12	53658-43031		SPRING	ｽﾌﾟﾘﾝｸﾞ	1	(LH)
13	53658-43041		PLUG	ﾌﾟﾗｸﾞ	1	(LH)
14	03320-00340		O-RING	Oﾘﾝｸﾞ	1	(LH)
15	277P0-81302		BODY,CYL,RH VFHM435	ﾎﾞﾃﾞｨ	1	
-	277P0-81332		BODY,CYL,RH VFHM480	ﾎﾞﾃﾞｨ	1	
-	277P0-81342		BODY,CYL,RH VFHM500	ﾎﾞﾃﾞｨ	1	
-	277P0-81352		BODY,CYL,RH VFHM540	ﾎﾞﾃﾞｨ	1	
-	277P0-81362		BODY,CYL,RH VFHM550	ﾎﾞﾃﾞｨ	1	
16	277P0-81502		BODY,CYL,LH VFHM435	ﾎﾞﾃﾞｨ	1	
-	277P0-81532		BODY,CYL,LH VFHM480	ﾎﾞﾃﾞｨ	1	
-	277P0-81542		BODY,CYL,LH VFHM500	ﾎﾞﾃﾞｨ	1	
-	277P0-81552		BODY,CYL,LH VFHM540	ﾎﾞﾃﾞｨ	1	
-	277P0-81562		BODY,CYL,LH VFHM550	ﾎﾞﾃﾞｨ	1	
17	277P0-81101		ROD,PISTON VFHM435	ﾛｯﾄﾞ	2	
-	277P0-81131		ROD,PISTON VFHM480	ﾛｯﾄﾞ	2	
-	277P0-81141		ROD,PISTON VFHM500	ﾛｯﾄﾞ	2	
-	277P0-81151		ROD,PISTON VFHM540	ﾛｯﾄﾞ	2	
-	277P0-81161		ROD,PISTON VFHM550	ﾛｯﾄﾞ	2	

FIG.209 LIFT CYLINDER(REAR)[VFHM2N4]

(M7020850) リフトシリンダ(リヤー)

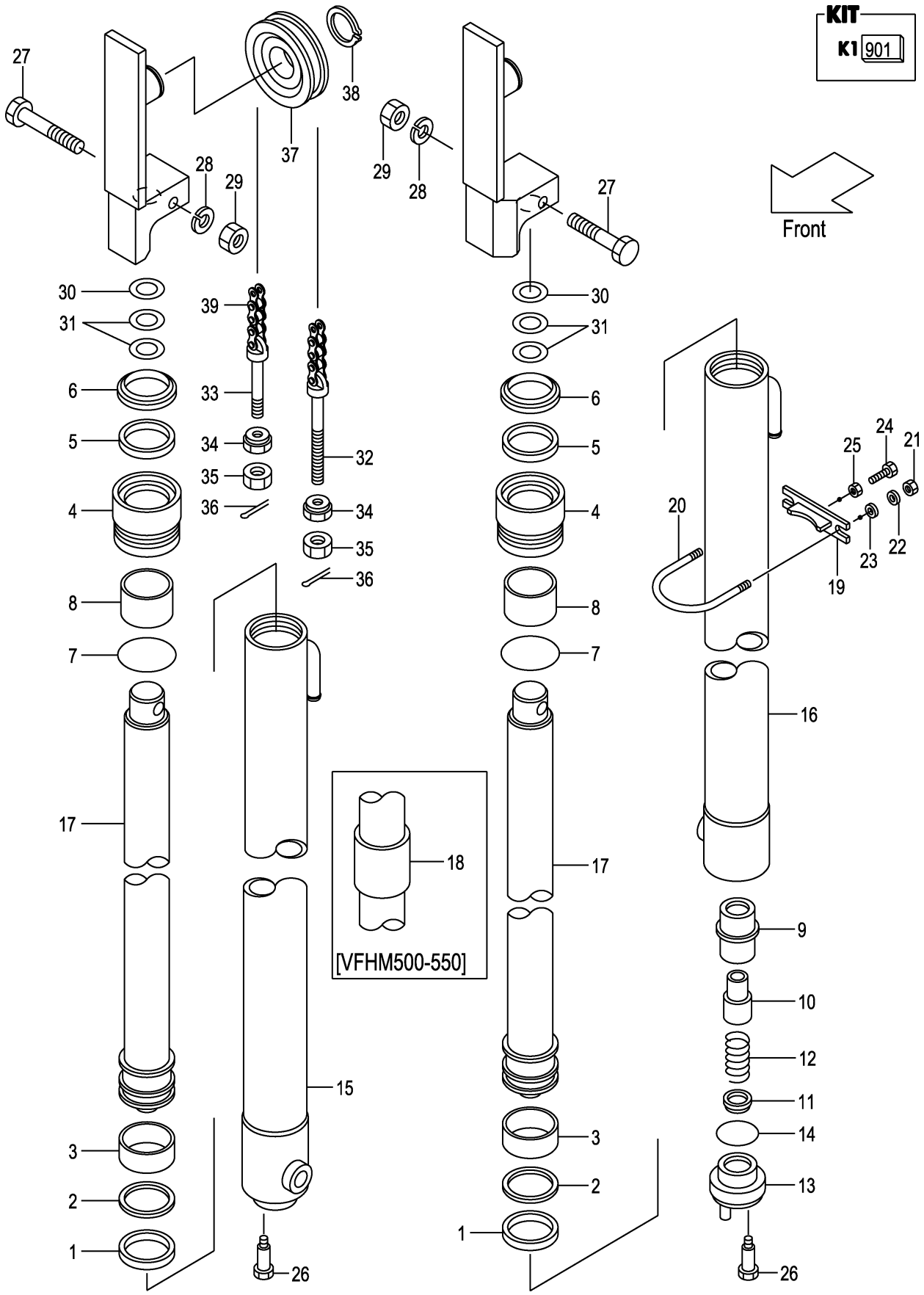

A:VFHM2N4(2T)
B:VFHM2N4(2.5T)

Item No	Part No.	Mark	Description		Req'd	Remarks : Serial No.
18	23650-83561		SPACER VFHM500	ｽﾍﾟｰｻ	2	
-	23650-83551		SPACER VFHM540	ｽﾍﾟｰｻ	2	
-	23650-83561		SPACER VFHM550	ｽﾍﾟｰｻ	2	
19	22N58-43011		SUPPORT,CYL	ｻﾎﾟｰﾄ	2	
20	234A8-42551		U-BOLT	Uﾎﾞﾙﾄ	2	
21	01400-00010		NUT	ﾅｯﾄ	4	
22	02010-20010		WASHER	ﾜｯｼｬ	4	
23	02000-20010		WASHER	ﾜｯｼｬ	4	
24	01120-12040		BOLT	ﾎﾞﾙﾄ	2	
25	01402-00012		NUT	ﾅｯﾄ	2	
26	214A8-42661		BOLT	ﾎﾞﾙﾄ	2	
27	01100-12070		BOLT	ﾎﾞﾙﾄ	2	
28	02010-00012		WASHER	ﾜｯｼｬ	2	
29	01400-00012		NUT	ﾅｯﾄ	2	
30	23917-42191		SHIM,T-1.0	ｼﾑ	10	
31	22679-43831		SHIM,T-0.5	ｼﾑ	10	
32	52672-72231		PIN,ANCHOR	ﾋﾟﾝ	2	
33	23500-82001		PIN,ANCHOR	ﾋﾟﾝ	2	
34	22218-40191		NUT	ﾅｯﾄ	4	
35	01400-00018		NUT	ﾅｯﾄ	4	
36	02200-03030		PIN	ﾋﾟﾝ	4	
37	234A8-43501		SHEAVE	ｼｰﾌﾞ	2	
38	02100-00040		RING,SNAP	ﾘﾝｸﾞ	2	
39	22679-45991		CHAIN,LEAF VFHM435	ﾁｪｰﾝ	2	
-	22679-46071		CHAIN,LEAF VFHM480	ﾁｪｰﾝ	2	
-	22679-46111		CHAIN,LEAF VFHM500	ﾁｪｰﾝ	2	
-	22679-46191		CHAIN,LEAF VFHM540	ﾁｪｰﾝ	2	
-	22679-46211		CHAIN,LEAF VFHM550	ﾁｪｰﾝ	2	

FIG.210 MAST PIPING [VFHM2N4]

(M7020860) マストパイピング

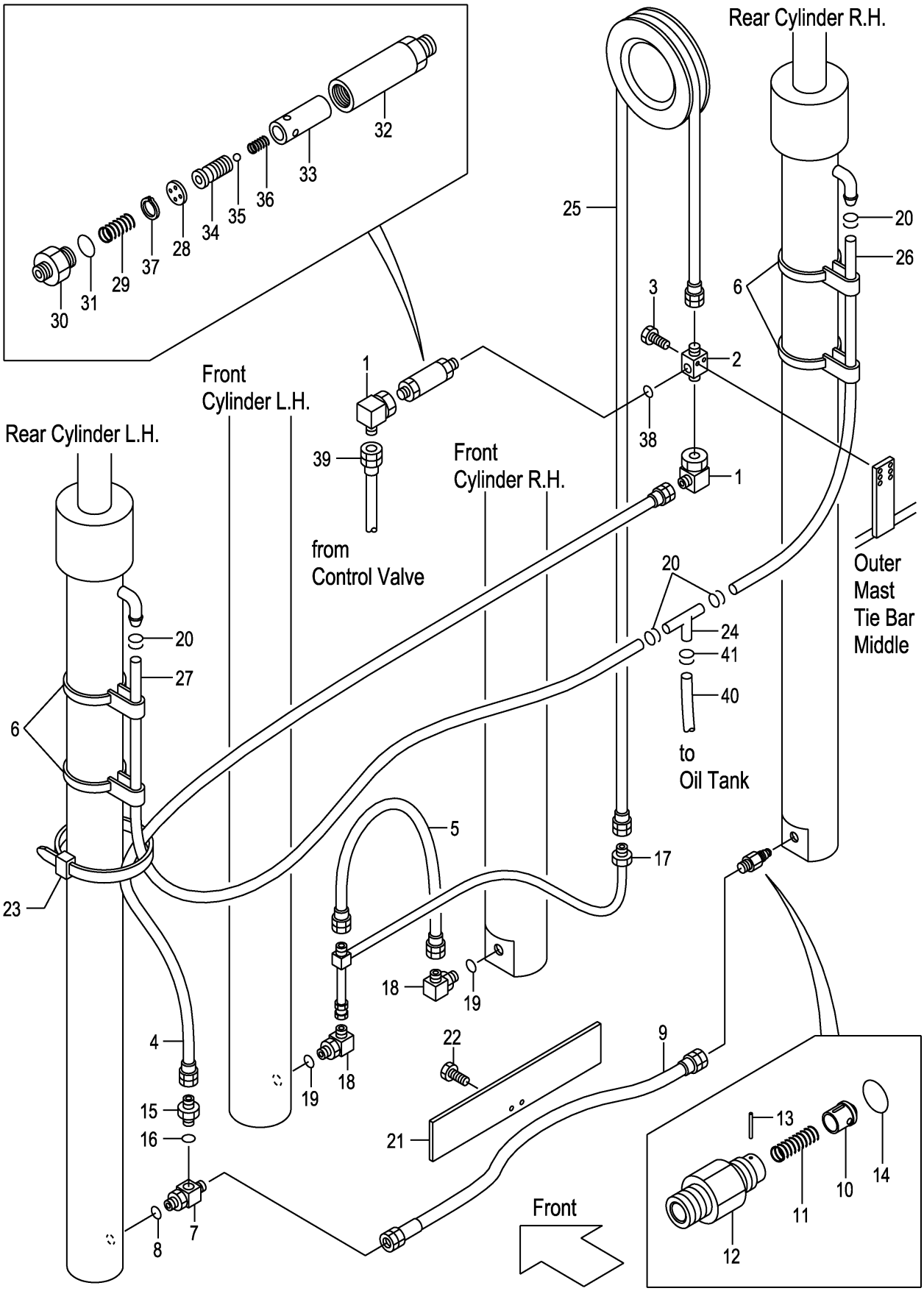

A:VFHM2N4(2T)
B:VFHM2N4(2.5T)

Item No	Part No.	Mark	Description		Req'd	Remarks : Serial No.
1	62150-14321		ELBOW	ｴﾙﾎﾞ	2	
2	229F0-94101		THREE-WAY	ｽﾘｰｳｴｲ	1	
3	01184-10040		BOLT	ﾎﾞﾙﾄ	2	
4	22N40-82221		HOSE	ﾎｰｽ	1	
5	22N40-82201		HOSE	ﾎｰｽ	1	
6	22N58-45001		BAND	ﾊﾞﾝﾄﾞ	2	
A1	216G0-93101		THREE-WAY-ASSY	ｽﾘｰｳｪｲｱｯｾﾝ	1	INC.7,8
7	NO PART NO.	#	THREE-WAY	ｽﾘｰｳｴｲ	1	
8	03320-00140		O-RING	Oﾘﾝｸﾞ	1	
9	22N50-92101		HOSE	ﾎｰｽ	1	
A2	234A8-40701		VALVE-ASSY,CUT	ｶｯﾄﾊﾞﾙﾌﾞｱｯｾﾝ	1	INC.10-14
10	234A8-42602		PISTON	ﾋﾟｽﾄﾝ	1	
11	234A8-42611		SPRING	ｽﾌﾟﾘﾝｸﾞ	1	
12	234A8-42622		NIPPLE	ﾆｯﾌﾟﾙ	1	
13	02270-01014		PIN	ﾋﾟﾝ	1	
14	03320-00140		O-RING	Oﾘﾝｸﾞ	1	
A3	04134-20404		NIPPLE-ASSY	ﾆｯﾌﾟﾙｱｯｾﾝ	1	INC.15,16
15	NO PART NO.	#	NIPPLE	ﾆｯﾌﾟﾙ	1	
16	03320-00180		O-RING	Oﾘﾝｸﾞ	1	
17	22N40-81001		PIPE	ﾊﾟｲﾌﾟ	1	
A4	22N40-81091		ELBOW-ASSY	ｴﾙﾎﾞｱｯｾﾝ	2	INC.18,19
18	NO PART NO.	#	ELBOW	ｴﾙﾎﾞ	2	
19	03320-00180		O-RING	Oﾘﾝｸﾞ	2	
20	24329-46201		CLIP	ｸﾘｯﾌﾟ	4	
21	22N40-82251		PLATE	ﾌﾟﾚｰﾄ	1	
22	01183-08016		BOLT	ﾎﾞﾙﾄ	2	
23	25790-94021		BAND,HOSE	ﾊﾞﾝﾄﾞ	3	
24	53675-55051		THREE-WAY	ｽﾘｰｳｴｲ	1	
25	04601-44283		HOSE VFHM435	ﾎｰｽ	1	
-	04601-44312		HOSE VFHM480	ﾎｰｽ	1	
-	04601-44332		HOSE VFHM500	ﾎｰｽ	1	
-	04601-44356		HOSE VFHM540	ﾎｰｽ	1	
-	04601-44364		HOSE VFHM550	ﾎｰｽ	1	
26	04710-04160		HOSE,RH VFHM435	ﾎｰｽ	1	
-	04710-04175		HOSE,RH VFHM480	ﾎｰｽ	1	
-	04710-04185		HOSE,RH VFHM500	ﾎｰｽ	1	
-	04710-04200		HOSE,RH VFHM540	ﾎｰｽ	1	
-	04710-04205		HOSE,RH VFHM550	ﾎｰｽ	1	
27	04710-04165		HOSE,LH VFHM435	ﾎｰｽ	1	
-	04710-04180		HOSE,LH VFHM480	ﾎｰｽ	1	
-	04710-04190		HOSE,LH VFHM500	ﾎｰｽ	1	
-	04710-04205		HOSE,LH VFHM540	ﾎｰｽ	1	
-	04710-04210		HOSE,LH VFHM550	ﾎｰｽ	1	
A5	234A8-41001		REGULATOR-ASSY,FLOW	ﾌﾛｰﾚｷﾞｭﾚｰﾀｱｯｾﾝ	1	INC.28-37
28	NO PART NO.	#	PLATE	ﾌﾟﾚｰﾄ	1	
29	27979-43101		SPRING	ｽﾌﾟﾘﾝｸﾞ	1	
30	NO PART NO.	#	NIPPLE	ﾆｯﾌﾟﾙ	1	
31	03300-00280		O-RING	Oﾘﾝｸﾞ	1	
32	NO PART NO.	#	CASE	ｹｰｽ	1	
33	NO PART NO.	#	SLEEVE	ｽﾘｰﾌﾞ	1	

FIG.210 MAST PIPING [VFHM2N4]

(M7020860) マストパイピング

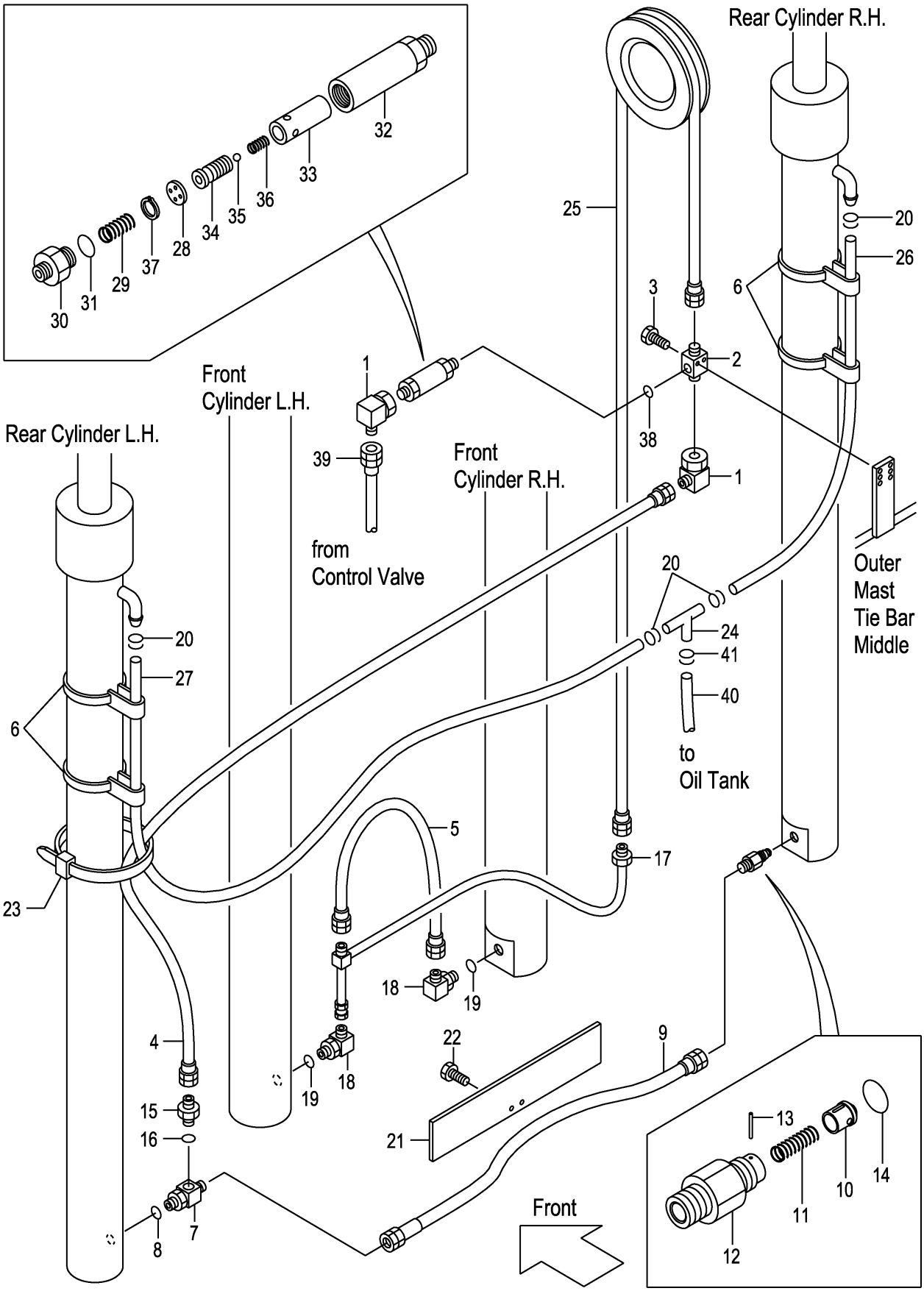

A:VFHM2N4(2T)
B:VFHM2N4(2.5T)

Item No	Part No.	Mark	Description		Req'd	Remarks : Serial No.
34	NO PART NO.	#	PISTON	ﾋﾟｽﾄﾝ	1	
35	24459-42951		BALL,NYLON	ﾎﾞｰﾙ	1	
36	214A8-44151		SPRING	ｽﾌﾟﾘﾝｸﾞ	1	
37	02110-00018		RING,SNAP	ﾘﾝｸﾞ	1	
38	03320-00180		O-RING	Oﾘﾝｸﾞ	1	
39	22N40-82801		HOSE	ﾎｰｽ	1	
40	04710-04150		HOSE	ﾎｰｽ	1	
41	24329-46201		CLIP	ｸﾘｯﾌﾟ	2	

PARTS NUMBER INDEX

Part No.	Fig.No.	Part No.	Fig.No.	Part No.	Fig.No.	Part No.	Fig.No.
B-B6111-40022	179	B-B6567-11001	202	B-B6717-93601	186	B-95151-07500	186
B-B6111-40022	202	B-B6567-11002	202	B-B6717-93602	186	B-95151-07500	201
B-B6111-40022	202	B-B6567-11101	202	B-B6717-93701	186	BK-7341006000	59
B-B6111-40023	202	B-B6567-11102	202	B-B6717-93702	186	BK-8059061000	59
B-B6111-40024	179	B-B6567-11201	202	B-B6717-93801	186	BK-8104209010	59
B-B6111-40026	202	B-B6567-11202	202	B-B6717-93802	186	BK-81431A4700	59
B-B6111-40034	202	B-B6567-11301	202	B-B6717-93901	186	C-11452-2N0-C	164
B-B6121-75007	186	B-B6567-11302	202	B-B6717-93902	186	C-11452-2N0-C	166
B-B6121-75007	201	B-B6567-11401	202	B-B6717-94001	186	C-11452-2N0-E	164
B-B6181-75007	186	B-B6567-11402	202	B-B6717-94002	186	C-11452-2N0-E	166
B-B6181-75007	201	B-B6567-11501	202	B-B6717-94101	186	C-11452-2N5-D	164
B-B6521-90004	186	B-B6567-11502	202	B-B6717-94102	186	C-11452-2N5-D	165
B-B6521-90004	201	B-B6567-11601	202	B-B6717-94201	186	R-402-00710-12	142
B-B6551-91008	179	B-B6567-11602	202	B-B6717-94202	186	R-402-65004-41	142
B-B6567-08101	179	B-B6711-00001	186	B-B6717-94301	186	R-403-21988	142
B-B6567-08102	179	B-B6711-00001	201	B-B6717-94302	186	W-K2PK-M	174
B-B6567-08201	179	B-B6717-87601	201	B-B675A-00006	186	W-K2PK-M	181
B-B6567-08202	179	B-B6717-87602	201	B-B675A-00006	201	W-K2PK-M	189
B-B6567-08301	179	B-B6717-87701	201	B-B675B-00003	186	W-K2PK-M	196
B-B6567-08302	179	B-B6717-87702	201	B-B675B-00003	201	W-K2PK-M	204
B-B6567-08401	179	B-B6717-87801	201	B-B6983-75007	186	Z-8-94132-674-0	10
B-B6567-08402	179	B-B6717-87802	201	B-B6983-75007	201	Z-8-94132-675-0	10
B-B6567-08501	179	B-B6717-87901	201	B-C4300-22001	186	Z-8-94367-294-0	10
B-B6567-08502	179	B-B6717-87902	201	B-C4300-22001	201	Z-8-94367-956-0	10
B-B6567-08601	179	B-B6717-88001	201	B-26570-30115	186	Z-8-94367-957-0	10
B-B6567-08602	179	B-B6717-88002	201	B-26570-30115	201	01030-04014	40
B-B6567-08701	179	B-B6717-88101	201	B-30096-02207	202	01030-04020	45
B-B6567-08702	179	B-B6717-88102	201	B-30121-50102	179	01030-05008	74
B-B6567-08801	179	B-B6717-88201	186	B-30121-50102	202	01030-05008	74A
B-B6567-08802	179	B-B6717-88201	201	B-30131-40017	179	01030-05035	169
B-B6567-08901	179	B-B6717-88202	186	B-30131-40017	202	01030-05055	25
B-B6567-08902	179	B-B6717-88202	201	B-30131-50018	179	01030-06010	74
B-B6567-09001	179	B-B6717-88301	201	B-30131-50018	202	01030-06010	74A
B-B6567-09002	179	B-B6717-88302	201	B-30131-55009	186	01030-06012	169
B-B6567-09101	179	B-B6717-88401	201	B-30131-55009	201	01030-06012	169A
B-B6567-09102	179	B-B6717-88402	201	B-30141-91049	179	01030-06025	178
B-B6567-09201	179	B-B6717-88501	201	B-30161-50046	179	01033-05014	17
B-B6567-09202	179	B-B6717-88502	201	B-30161-50046	202	01033-05014	18
B-B6567-09301	179	B-B6717-88601	201	B-30161-91774	179	01043-03010	14
B-B6567-09302	179	B-B6717-88602	201	B-30161-91774	202	01066-08008	61
B-B6567-09401	179	B-B6717-92601	186	B-30191-40025	179	01066-10012	162
B-B6567-09402	179	B-B6717-92602	186	B-30191-40025	202	01066-10012	162
B-B6567-09501	179	B-B6717-92701	186	B-30191-55050	186	01066-10012	162A
B-B6567-09502	179	B-B6717-92702	186	B-30191-55050	201	01066-10012	162A
B-B6567-09601	179	B-B6717-92801	186	B-30461-50039	179	01100-05016	135
B-B6567-09602	179	B-B6717-92802	186	B-30461-50039	202	01100-06010	170
B-B6567-09701	179	B-B6717-92901	186	B-3050A-00093	179	01100-06020	45
B-B6567-09702	179	B-B6717-92902	186	B-3050A-00093	202	01100-08016	37
B-B6567-09801	179	B-B6717-93001	186	B-3050B-00119	179	01100-08020	33
B-B6567-09802	179	B-B6717-93002	186	B-3050B-00119	202	01100-08020	33
B-B6567-09901	179	B-B6717-93101	186	B-30961-04012	179	01100-08020	33
B-B6567-09902	179	B-B6717-93102	186	B-30961-04012	202	01100-08020	37
B-B6567-10601	202	B-B6717-93201	186	B-30961-55013	186	01100-08020	47
B-B6567-10602	202	B-B6717-93202	186	B-30961-55013	201	01100-08020	48
B-B6567-10701	202	B-B6717-93301	186	B-94721-22101	186	01100-08020	54
B-B6567-10702	202	B-B6717-93302	186	B-94721-22101	201	01100-08020	58
B-B6567-10801	202	B-B6717-93401	186	B-95123-07000	186	01100-08025	35
B-B6567-10802	202	B-B6717-93402	186	B-95123-07000	201	01100-08025	54
B-B6567-10901	202	B-B6717-93501	186	B-95151-04000	179	01100-08025	104
B-B6567-10902	202	B-B6717-93502	186	B-95151-04000	202	01100-08030	11

Part No.	Fig.No.	Part No.	Fig.No.	Part No.	Fig.No.	Part No.	Fig.No.
01100-10016	171	01103-10020	193	01183-06010	111	01184-12025	178
01100-10020	175	01103-10020	208	01183-06010	111A	01184-12025	182
01100-10025	108	01103-10030	58	01183-06012	107	01184-12025	185
01100-10025	109	01103-10030	62	01183-06012	148	01184-12025	185
01100-10025	110	01103-10030	62	01183-06012	149	01184-12025	185
01100-10025	110A	01103-10035	44	01183-06012	150	01184-12025	190
01100-10030	111	01103-10040	56	01183-06012	151	01184-12025	197
01100-10030	111A	01103-10040	62	01183-06016	21	01184-12025	200
01100-10040	52	01103-10045	175	01183-06016	22	01184-12025	200
01100-10040	107	01103-10045	182	01183-06016	188	01184-12025	200
01100-10055	53	01103-10045	197	01183-06016	188	01184-12025	205
01100-12020	102	01103-10045	205	01183-06016	195	01184-12030	114
01100-12020	175	01103-10060	62	01183-06020	178	01184-12030	114
01100-12070	209	01103-10065	58	01183-06020	185	01184-12040	190
01100-12080	193	01103-12025	1	01183-06020	185	01185-04010	74
01100-12080	208	01103-12030	1	01183-06020	185	01185-04010	74A
01100-14025	176	01103-14040	179	01183-06020	200	01185-04012	14
01100-14025	176	01103-14040	187	01183-08012	36	01185-06012	110A
01100-14025	183	01103-14040	194	01183-08012	54	01185-06012	111A
01100-14025	183	01103-14040	202	01183-08012	135	01185-06016	19
01100-14025	183	01103-16065	177	01183-08012	148	01185-06016	20
01100-14025	183	01103-16065	184	01183-08012	149	01185-08012	200
01100-14025	191	01103-16065	192	01183-08012	150	01185-08012	200
01100-14025	198	01103-16065	199	01183-08012	151	01185-08016	3
01100-14025	206	01103-16065	207	01183-08016	2	01185-08016	5
01100-14030	176	01106-10030	68	01183-08016	10	01185-08016	6
01100-14030	176	01106-10035	68	01183-08016	21	01185-08016	7
01100-14030	183	01106-10045	68	01183-08016	22	01185-08016	19
01100-14030	183	01106-10060	68	01183-08016	36	01185-08016	20
01100-14030	183	01106-12035	63	01183-08016	36	01185-08016	23
01100-14030	191	01109-12025	126	01183-08016	55	01185-08016	26
01100-14030	198	01110-30150	124	01183-08016	108	01185-08016	27
01100-14030	198	01110-30150	124A	01183-08016	109	01185-08016	27
01100-14030	198	01110-30150	125	01183-08016	127	01185-08016	28
01100-14030	206	01110-30150	125A	01183-08016	210	01185-08016	28
01100-14035	176	01113-10035	72	01183-08020	4	01185-08016	29
01100-14035	183	01113-30200	125	01183-08020	37	01185-08016	29
01100-14035	198	01113-30200	125A	01183-08025	160	01185-08016	30
01100-16016	179	01113-30250	125	01183-08025	168	01185-08016	35
01100-16020	126	01113-30250	125A	01183-08025	168A	01185-08016	37
01100-16040	97	01120-10040	109	01184-10012	203	01185-08016	58
01100-16040	97A	01120-12040	179	01184-10016	56	01185-08016	74
01100-16045	75	01120-12040	179	01184-10020	187	01185-08016	74A
01100-16050	207	01120-12040	209	01184-10020	194	01185-08016	104
01100-16060	199	01123-10045	56	01184-10020	195	01185-08016	107
01100-16070	186	01141-06012	74	01184-10025	52	01185-08016	110
01100-16070	201	01141-06012	74A	01184-10025	53	01185-08016	111
01100-16075	186	01170-05045	62	01184-10025	118	01185-08016	127
01101-10130	168	01171-06025	99	01184-10025	207	01185-08016	130
01101-10130	168A	01171-06025	99A	01184-10030	52	01185-08016	131A
01103-08016	52	01171-06025	100	01184-10030	53	01185-08016	131B
01103-08016	55	01171-06025	100A	01184-10030	110	01185-08016	133
01103-08016	68	01181-08016	128	01184-10030	110A	01185-08016	134
01103-08016	74	01181-08025	12	01184-10030	111	01185-08016	136
01103-08016	74A	01183-05012	172	01184-10030	111A	01185-08016	158
01103-08020	56	01183-05012	173	01184-10040	203	01185-08020	12
01103-08030	62	01183-06010	19	01184-10040	210	01185-08020	37
01103-08040	62	01183-06010	20	01184-12025	175	01185-08020	54
01103-10018	186	01183-06010	110	01184-12025	178	01185-08020	168
01103-10018	201	01183-06010	110A	01184-12025	178	01185-08020	168A

Part No.	Fig.No.	Part No.	Fig.No.	Part No.	Fig.No.	Part No.	Fig.No.
01185-08020	171	01400-00008	138	01402-00012	193	02000-00014	175
01185-08020	172	01400-00008	139	01402-00012	208	02000-00016	179
01185-08020	173	01400-00008	139A	01402-00012	209	02000-00016	199
01185-08020	178	01400-00008	140	01402-00018	186	02000-00016	207
01185-08020	178	01400-00008	141	01402-10014	70	02000-00022	56
01185-08020	203	01400-00010	53	01412-00030	74	02000-00024	55
01185-08025	44	01400-00010	56	01412-00030	74A	02000-00030	74
01185-08025	50	01400-00010	74	01420-00006	23	02000-00030	74A
01185-08025	51	01400-00010	74A	02000-00004	45	02000-20010	168
01185-08025	51A	01400-00010	107	02000-00005	107	02000-20010	168
01185-08030	130	01400-00010	110	02000-00005	148	02000-20010	168A
01185-08030	131A	01400-00010	110A	02000-00005	149	02000-20010	168A
01185-10016	130	01400-00010	111	02000-00005	150	02000-20010	179
01185-10016	131A	01400-00010	111A	02000-00005	151	02000-20010	179
01185-10016	131B	01400-00010	179	02000-00006	23	02000-20010	187
01186-10016	162	01400-00010	179	02000-00006	54	02000-20010	187
01186-10016	162A	01400-00010	209	02000-00006	104	02000-20010	194
01186-10020	13	01400-00012	1	02000-00006	107	02000-20010	202
01186-10020	203	01400-00012	47	02000-00006	107	02000-20010	202
01186-10065	171	01400-00012	48	02000-00006	109	02000-20010	209
01186-12025	99	01400-00012	90	02000-00006	129	02001-00012	126
01186-12025	99A	01400-00012	92	02000-00006	178	02010-00004	40
01186-12025	100	01400-00012	94	02000-00008	12	02010-00004	45
01186-12025	100A	01400-00012	96	02000-00008	74	02010-00006	23
01186-12025	126	01400-00012	97	02000-00008	74A	02010-00006	45
01186-12030	47	01400-00012	97A	02000-00008	110	02010-00006	104
01186-12030	48	01400-00012	179	02000-00008	110A	02010-00006	127
01186-12035	114	01400-00012	179	02000-00008	111	02010-00006	129
01186-12040	99	01400-00012	209	02000-00008	111A	02010-00006	136
01186-12040	99A	01400-00018	179	02000-00008	127	02010-00006	170
01186-12040	100	01400-00018	186	02000-00008	135	02010-00008	11
01186-12040	100A	01400-00018	193	02000-00008	193	02010-00008	12
01213-10025	54	01400-00018	201	02000-00008	208	02010-00008	37
01217-10030	1	01400-00018	202	02000-00010	8	02010-00008	40
01400-00004	45	01400-00018	208	02000-00010	11	02010-00008	50
01400-00005	135	01400-00018	209	02000-00010	13	02010-00008	51
01400-00006	23	01400-10016	78	02000-00010	74	02010-00008	51A
01400-00006	45	01400-10016	80	02000-00010	74A	02010-00008	137
01400-00006	104	01400-10016	82	02000-00010	127	02010-00008	138
01400-00006	127	01400-10016	84	02000-00010	142	02010-00008	139
01400-00006	129	01400-10020	63	02000-00010	193	02010-00008	139A
01400-00006	136	01400-10020	64	02000-00010	208	02010-00008	140
01400-00008	12	01400-20010	13	02000-00012	47	02010-00008	141
01400-00008	27	01402-00006	54	02000-00012	48	02010-00008	193
01400-00008	28	01402-00008	35	02000-00012	70	02010-00008	208
01400-00008	29	01402-00008	54	02000-00012	97	02010-00010	13
01400-00008	33	01402-00008	104	02000-00012	97A	02010-00010	52
01400-00008	33	01402-00008	115	02000-00012	107	02010-00010	53
01400-00008	33	01402-00008	116	02000-00012	178	02010-00010	74
01400-00008	35	01402-00008	117	02000-00012	178	02010-00010	74A
01400-00008	40	01402-00010	108	02000-00012	178	02010-00010	111
01400-00008	46	01402-00010	109	02000-00012	185	02010-00010	111A
01400-00008	47	01402-00010	110	02000-00012	185	02010-00010	142
01400-00008	48	01402-00010	110A	02000-00012	185	02010-00010	175
01400-00008	48	01402-00010	142	02000-00012	200	02010-00012	97
01400-00008	50	01402-00010	174	02000-00012	200	02010-00012	97A
01400-00008	51	01402-00010	181	02000-00012	200	02010-00012	102
01400-00008	51A	01402-00010	189	02000-00014	47	02010-00012	175
01400-00008	62	01402-00010	196	02000-00014	48	02010-00012	209
01400-00008	137	01402-00010	204	02000-00014	70	02010-00014	176

Part No.	Fig.No.	Part No.	Fig.No.	Part No.	Fig.No.	Part No.	Fig.No.
02010-00014	176	02011-00014	187	02200-16010	54	03217-08501	74A
02010-00014	176	02011-00014	194	02200-16010	107	03300-00160	56
02010-00014	183	02011-00014	202	02200-16010	148	03300-00180	56
02010-00014	183	02011-00016	78	02200-16010	149	03300-00280	188
02010-00014	191	02011-00016	80	02200-16010	150	03300-00280	203
02010-00014	191	02011-00016	82	02200-16010	151	03300-00280	210
02010-00014	198	02011-00016	84	02200-16015	107	03310-00300	56
02010-00014	198	02011-00016	177	02200-16015	109	03320-00110	73
02010-00014	198	02011-00016	184	02212-06016	62	03320-00110	147
02010-00014	206	02011-00016	192	02212-10020	63	03320-00110	147
02010-00016	75	02011-00016	199	02212-10020	68	03320-00140	73
02010-00016	97	02011-00016	207	02212-12020	56	03320-00140	73
02010-00016	97A	02013-00012	126	02212-12020	58	03320-00140	73
02010-00016	126	02100-00020	56	02262-06015	107	03320-00140	147
02010-00016	179	02100-00020	70	02262-06020	54	03320-00140	158
02010-00016	186	02100-00022	56	02262-06020	109	03320-00140	161
02010-00016	199	02100-00025	55	02262-08025	110	03320-00140	161
02010-00016	201	02100-00030	57	02262-08025	110A	03320-00140	161
02010-00016	207	02100-00040	61	02262-08025	111	03320-00140	180
02010-00020	63	02100-00040	179	02262-08025	111A	03320-00140	180
02010-00030	124	02100-00040	186	02262-08045	135	03320-00140	188
02010-00030	124A	02100-00040	201	02262-14045	175	03320-00140	188
02010-00030	125	02100-00040	202	02270-01014	180	03320-00140	188
02010-00030	125A	02100-00040	209	02270-01014	188	03320-00140	195
02010-10006	74	02100-00045	175	02270-01014	195	03320-00140	195
02010-10006	74A	02100-00045	175	02270-01014	203	03320-00140	195
02010-20010	77	02100-00045	182	02270-01014	210	03320-00140	203
02010-20010	179	02110-00014	193	02270-04020	62	03320-00140	203
02010-20010	179	02110-00014	208	02270-04035	62	03320-00140	210
02010-20010	187	02110-00018	180	02432-01008	164	03320-00140	210
02010-20010	187	02110-00018	188	02432-01008	190	03320-00180	142
02010-20010	194	02110-00018	195	02432-01008	197	03320-00180	147
02010-20010	202	02110-00018	203	03000-06207	57	03320-00180	180
02010-20010	202	02110-00018	210	03000-06208	57	03320-00180	187
02010-20010	209	02110-00022	62	03000-06208	57	03320-00180	188
02011-00008	52	02110-00022	62	03000-06208	60	03320-00180	188
02011-00008	55	02110-00028	193	03000-06210	67	03320-00180	194
02011-00008	56	02110-00028	208	03000-06306	57	03320-00180	195
02011-00008	62	02110-00030	62	03000-06306	57	03320-00180	195
02011-00008	62	02110-00035	97	03000-06306	60	03320-00180	195
02011-00008	68	02110-00037	70	03000-06306	61	03320-00180	195
02011-00008	74	02120-00038	57	03003-06306	57	03320-00180	203
02011-00008	74A	02120-00040	57	03020-06904	70	03320-00180	203
02011-00010	44	02120-00040	60	03071-30207	74	03320-00180	203
02011-00010	56	02121-00058	61	03071-30207	74A	03320-00180	210
02011-00010	58	02200-02020	110	03071-30211	74	03320-00180	210
02011-00010	62	02200-02020	110A	03071-30211	74A	03320-00180	210
02011-00010	68	02200-02020	111	03071-30214	64	03320-00210	193
02011-00010	72	02200-02020	111A	03126-83201	74	03320-00210	208
02011-00010	186	02200-03020	107	03126-83201	74A	03320-00240	147
02011-00010	193	02200-03030	179	03146-13201	74	03320-00280	180
02011-00010	201	02200-03030	186	03146-13201	74A	03320-00280	195
02011-00010	208	02200-03030	193	03190-00006	187	03320-00290	142
02011-00012	1	02200-03030	201	03190-00006	194	03320-00340	187
02011-00012	63	02200-03030	202	03190-00013	56	03320-00340	194
02011-00012	90	02200-03030	208	03192-00012	64	03320-00340	209
02011-00012	92	02200-03030	209	03192-10012	64	03350-00750	97
02011-00012	94	02200-04025	175	03192-30072	57	03360-00210	193
02011-00012	96	02200-06055	74	03211-09501	64	03360-00210	208
02011-00014	179	02200-06055	74A	03217-08501	74	04134-20303	158

Part No.	Fig.No.	Part No.	Fig.No.	Part No.	Fig.No.	Part No.	Fig.No.
04134-20404	203	04710-04190	210	04913-21380	195	06731-00120	88
04134-20404	210	04710-04200	203	04914-00019	122	06804-70012	85
04138-00303	38	04710-04200	210	04914-00019	122A	06806-55015	87
04150-20202	73	04710-04205	203	04914-00019	188	06806-60009	94
04150-20202	147	04710-04205	203	04914-00019	195	06806-60009	94
04150-20202	147	04710-04205	210	06001-55015	86	06806-60009	94
04150-20303	73	04710-04205	210	06001-60009	92	06806-60009	95
04150-20404	147	04710-04210	203	06001-60009	93	06806-70012	82
04150-20404	188	04710-04210	210	06001-70012	80	06806-70012	82
04150-20404	203	04710-04220	203	06001-70012	81	06806-70012	82
04601-44221	203	04710-04225	203	06001-70012	88	06806-70012	83
04601-44230	203	04710-04245	203	06001-70012	88	06806-70012	89
04601-44246	203	04710-04250	203	06005-55015	86	06806-70012	89
04601-44255	203	04710-04265	203	06005-60009	92	06807-60009	94
04601-44270	203	04710-04270	203	06005-60009	93	06807-70012	82
04601-44279	203	04710-04280	203	06005-70012	80	06841-55015	87
04601-44283	210	04710-04285	203	06005-70012	81	06841-60009	94
04601-44299	203	04901-00100	55	06005-70012	88	06841-70012	82
04601-44309	203	04901-00100	74	06005-70012	88	06841-70012	89
04601-44312	210	04901-00100	74A	06006-55015	86	06841-70012	89
04601-44319	203	04901-00100	177	06006-60009	90	06843-55015	87
04601-44328	203	04901-00100	184	06006-60009	91	06843-60009	94
04601-44332	210	04901-00100	192	06006-60009	92	06843-70012	82
04601-44343	203	04901-00100	199	06006-60009	93	06843-70012	89
04601-44351	203	04901-00100	207	06006-70012	78	06843-70012	89
04601-44353	203	04901-00160	162	06006-70012	79	06851-55015	87
04601-44356	210	04901-00160	162A	06006-70012	80	06851-60009	94
04601-44361	203	04901-00190	55	06006-70012	81	06851-70012	82
04601-44364	210	04901-00190	74	06006-70012	88	06851-70012	89
04601-44388	203	04901-00190	74	06006-70012	88	06851-70012	89
04601-44397	203	04901-00190	74A	06007-55015	86	09001-10035	186
04601-44430	203	04901-00190	75	06007-60009	92	09001-10037	201
04601-44439	203	04901-00190	108	06007-60009	93	09001-10039	186
04601-44473	203	04901-00190	109	06007-70012	80	09001-10041	186
04601-44482	203	04901-00191	74	06007-70012	81	09001-10041	201
04601-44505	203	04901-00191	74A	06007-70012	88	09001-10043	179
04601-44515	203	04911-00020	159	06007-70012	88	09001-10045	186
04691-02035	158	04911-00021	180	06701-55015	86	09001-10045	186
04691-02038	158	04911-00021	180	06701-70012	78	09001-10045	201
04691-04123	157	04911-00022	38	06701-70012	79	09001-10047	179
04710-04004	122A	04911-00023	161	06701-70012	80	09001-10047	186
04710-04005	122	04911-00040	9	06701-70012	81	09001-10049	202
04710-04135	203	04911-00040	157	06701-70012	88	09001-10051	179
04710-04140	203	04911-00042	157	06701-70012	88	09001-10051	186
04710-04150	203	04911-00044	9	06702-60009	90	09001-10051	186
04710-04150	203	04911-00046	157	06702-60009	91	09001-10051	201
04710-04150	210	04911-00060	3	06702-60009	92	09001-10053	179
04710-04155	203	04911-00060	3	06702-60009	93	09001-10053	201
04710-04160	203	04911-00060	4	06711-55015	86	09001-10053	202
04710-04160	210	04911-00065	3	06711-70012	78	09001-10055	179
04710-04165	203	04911-00065	4	06711-70012	79	09001-10055	186
04710-04165	210	04911-00090	4	06711-70012	80	09001-10057	186
04710-04175	203	04913-10200	19	06711-70012	81	09001-10057	201
04710-04175	210	04913-10200	20	06711-70012	88	09001-10057	202
04710-04180	203	04913-11100	110	06711-70012	88	09001-10059	179
04710-04180	210	04913-11100	110A	06712-60009	90	09001-10059	186
04710-04185	203	04913-11100	111	06712-60009	91	09001-10059	186
04710-04185	210	04913-11100	111A	06712-60009	92	09001-10059	201
04710-04190	159	04913-11200	38	06712-60009	93	09001-10061	202
04710-04190	203	04913-11380	102	06731-00120	86	09001-10063	179

PARTS NUMBER INDEX

Part No.	Fig.No.	Part No.	Fig.No.	Part No.	Fig.No.	Part No.	Fig.No.
09001-10063	179	12N43-19801	55	12N53-52141	68	12N53-82291	62
09001-10065	186	12N43-19801	57	12N53-52142	68	12N53-82321	62
09001-10065	201	12N43-19811	56	12N53-52151	68	12N53-82331	62
09001-10065	202	12N43-40251	57	12N53-52161	68	12N53-82351	62
09001-10067	179	12N43-42001	56	12N53-52171	68	12N53-82361	62
09001-10069	179	12N43-42031	56	12N53-52181	68	12N53-82371	62
09001-10069	179	12N43-42051	57	12N53-52191	68	12N53-82401	62
09001-10069	186	12N43-42061	57	12N53-52201	68	12N53-82421	62
09001-10069	202	12N43-42071	57	12N53-52211	68	12N53-82451	62
09001-10071	179	12N43-42101	57	12N53-52221	68	12N53-82481	62
09001-10071	201	12N43-42111	57	12N53-52231	68	12N53-82501	62
09001-10071	202	12N43-42121	57	12N53-52241	68	12N53-82531	62
09001-10073	186	12N43-42131	57	12N53-52251	68	12N53-82551	62
09001-10075	179	12N43-42141	57	12N53-52271	68	12N53-82571	62
09001-10077	186	12N43-42151	57	12N53-52291	68	12N53-82581	62
09001-10077	201	12N43-42161	57	12N53-52341	68	12N53-82621	53
09001-10077	202	12N43-42171	57	12N53-52381	68	12N53-82621	58
09001-10079	179	12N43-42191	57	12N53-52431	68	12N53-82621	65
09001-10081	186	12N43-42201	57	12N53-52441	68	12N53-82621	68
09001-10083	179	12N43-42211	57	12N53-52451	68	12N53-82641	59
09001-10083	201	12N43-42221	57	12N53-52461	68	12N53-82641	65
09001-10083	202	12N43-42251	57	12N53-52471	68	12N53-82701	62
09001-10087	179	12N43-42261	57	12N53-52481	68	12N53-82711	58
09001-10089	186	12N43-42271	57	12N53-52491	68	12N53-82721	62
09001-10089	202	12N43-42281	57	12N53-52501	68	12N53-82731	62
09001-10091	179	12N43-42291	57	12N53-52511	68	12N53-82732	62
09001-10095	202	12N43-42301	57	12N53-59801	68	12N53-82741	62
09001-10097	186	12N43-42321	57	12N53-59811	68	12N53-82751	62
09001-10101	179	12N43-42351	57	12N53-59821	68	12N53-82761	58
09001-10109	179	12N43-42401	56	12N53-59822	68	12N53-82771	62
10A63-10201	55	12N43-42411	56	12N53-80201	61	12N53-82781	62
10A73-52231	68	12N43-42421	56	12N53-80301	58	12N53-82791	62
11243-82081	61	12N43-42431	56	12N53-80311	58	12N53-89801	58
11243-82091	61	12N43-42441	56	12N53-80321	59	12N53-89801	60
11243-82161	61	12N43-42471	56	12N53-80341	62	12N53-89811	58
11243-82181	61	12N43-42481	56	12N53-82001	58	12N53-89831	62
11243-82211	61	12N43-42501	56	12N53-82011	58	12003-12021	55
115G3-82111	58	12N43-42511	56	12N53-82012	58	12003-42052	56
115G3-82241	58	12N43-42521	56	12N53-82021	58	12003-42061	56
115G3-82251	58	12N43-42551	57	12N53-82041	58	12003-42251	57
115G3-82351	61	12N43-42561	57	12N53-82061	55	12003-42421	56
115G3-82361	61	12N43-42571	57	12N53-82061	58	12003-42451	56
115G3-82671	62	12N43-42581	57	12N53-82081	58	12003-42461	56
116H3-82101	58	12N43-42601	56	12N53-82091	60	12163-82331	58
116H3-82101	60	12N52-50201	53	12N53-82101	61	12163-82421	58
116H3-82101	62	12N53-22001	67	12N53-82111	61	12163-82541	56
116H3-82201	62	12N53-22011	67	12N53-82131	61	12163-82541	58
116H3-82201	62	12N53-32001	65	12N53-82151	60	12163-82541	60
117M7-10401	142	12N53-32011	65	12N53-82161	60	12163-82561	59
118H3-82231	62	12N53-50201	66	12N53-82171	60	124G3-52011	68
12N42-50201	52	12N53-50231	66	12N53-82201	57	124T3-42651	66
12N42-50202	52	12N53-50301	68	12N53-82201	60	124T3-42661	66
12N43-10211	55	12N53-52031	68	12N53-82211	57	124T3-43041	12
12N43-12001	55	12N53-52061	68	12N53-82211	60	130C2-60302	45
12N43-12011	55	12N53-52081	68	12N53-82221	62	134A3-42071	57
12N43-12021	55	12N53-52091	68	12N53-82222	62	134A3-52041	68
12N43-12101	55	12N53-52101	68	12N53-82223	62	134A3-52051	68
12N43-12111	55	12N53-52111	68	12N53-82231	62	134B3-82401	61
12N43-12151	55	12N53-52121	68	12N53-82232	62	134G3-82111	61
12N43-12201	55	12N53-52131	68	12N53-82251	62	134G3-82121	61

Part No.	Fig.No.	Part No.	Fig.No.	Part No.	Fig.No.	Part No.	Fig.No.
134G3-82131	61	209P6-42831	135	214A0-51811	194	214A2-42621	48
134G3-82141	61	209P6-42831	136	214A0-51821	187	214A2-42621	49
134G3-89811	61	210F2-42031	25	214A0-51831	187	214A2-42621	51A
134G3-89831	61	210F8-42631	187	214A0-51841	187	214A2-44001	36
135C3-12081	55	210F8-42631	194	214A0-51851	187	214A2-44501	25
139B3-82121	62	21152-42091	19	214A0-51861	187	214A2-52002	54
14603-52131	68	21152-42091	20	214A0-51871	187	214A2-52012	54
15573-42021	57	21152-42091	51	214A0-51881	187	214A3-02011	64
15573-42151	56	21152-42091	51A	214A0-53681	187	214A4-12161	70
15573-42151	62	212T0-50501	186	214A0-53681	194	214A4-32041	74
15573-42151	63	212T0-50511	186	214A0-53721	187	214A4-32041	74A
15583-82101	60	212T0-50521	186	214A0-53721	194	214A4-32051	74
15583-82411	62	212T0-50531	186	214A0-53901	187	214A4-32051	74A
15583-82421	62	212T0-50541	186	214A0-53901	187	214A4-32161	74
15583-82441	62	212T0-50551	186	214A0-53901	194	214A4-32161	74A
15583-82451	62	212T0-50561	186	214A0-59821	187	214A4-32201	75
15583-82461	62	212T0-50571	186	214A0-59821	194	214A4-32211	75
15583-82521	58	212T0-50581	186	214A0-62151	188	214A5-22001	107
15583-82521	60	212T0-50591	186	214A0-72701	199	214A5-32312	110
15583-82571	60	212T0-50601	186	214A0-72701	207	214A5-32312	110A
15943-83261	58	212T0-50611	186	214A0-82681	186	214A5-32312	117
16113-52121	68	212T0-50621	186	214A0-82681	201	214A5-33012	117
16113-52141	68	212T0-50631	186	214A0-82831	186	214A5-33031	117
16402-54331	42	212T0-50641	186	214A0-82831	201	214A5-33041	117
16402-54331	46	212T0-80501	201	214A0-93001	197	214A5-33052	117
16402-54331	47	212T0-80511	201	214A0-93011	197	214A5-33062	117
16402-54331	48	212T0-80521	201	214A0-93031	197	214A5-53012	165
20A74-52101	97A	212T0-80531	201	214A0-93041	197	214A6-42252	37
20A74-52161	97A	212T0-80541	201	214A0-93201	197	214A6-42252	103
20A74-59801	97A	212T0-80551	201	214A0-93211	197	214A6-42771	132
20A75-20201	107	212T0-80561	186	214A0-93231	197	214A6-42771	132
20A75-22001	107	212T0-80561	201	214A0-93241	197	214A6-42781	136
20387-63741	73	212T0-80571	201	214A2-12001	8	214A6-42781	136
205A2-63311	45	212T0-80581	201	214A2-12021	8	214A6-42911	169A
20801-02141	10	212T0-80591	201	214A2-12111	8	214A7-42071	54
209K2-40501	18	212T0-80601	201	214A2-12121	8	214A7-42071	54
209K2-42002	25	212T0-82001	186	214A2-12141	8	214A7-42071	148
209K2-42021	25	212T0-82001	201	214A2-12201	8	214A7-42071	148
209K2-42041	25	212T0-82101	186	214A2-13001	8	214A7-42071	149
209K2-42351	19	212T0-82101	201	214A2-13011	8	214A7-42071	149
209K2-42351	20	21232-32551	11	214A2-22071	10	214A7-42071	149
209K2-42351	32	21232-32551	13	214A2-42141	165	214A7-42071	150
209K2-42351	32	21237-52051	120	214A2-42141	166	214A7-42071	150
209K2-42351	32	21237-52051	120	214A2-42331	21	214A7-42071	150
209K2-42351	32	21237-52062	120	214A2-42331	22	214A7-42071	150
209K2-42351	32	21237-52062	120	214A2-42331	109	214A7-42071	151
209K2-42351	32	213T1-02011	2	214A2-42611	8	214A7-42071	151
209K2-42351	34	213T1-02021	2	214A2-42611	19	214A7-42071	151
209K2-42351	46	214A0-51701	187	214A2-42611	20	214A7-42071	151
209K2-42351	47	214A0-51711	187	214A2-42611	32	214A7-42071	151
209K2-42351	48	214A0-51721	187	214A2-42611	32	214A7-42181	152
209K2-42351	50	214A0-51731	187	214A2-42611	34	214A7-42181	152
209K2-42351	51	214A0-51741	187	214A2-42611	49	214A7-42181	152
209K2-42351	51A	214A0-51751	187	214A2-42611	50	214A7-42181	152
209K2-42351	169	214A0-51761	187	214A2-42611	51	214A7-42191	152
209K2-42351	169A	214A0-51771	187	214A2-42611	51A	214A7-42201	152
209K2-43001	54	214A0-51781	187	214A2-42621	19	214A8-02201	177
209K2-43001	133	214A0-51791	187	214A2-42621	20	214A8-02201	184
209K2-43001	134	214A0-51801	187	214A2-42621	46	214A8-02201	192
209K4-12551	71	214A0-51811	187	214A2-42621	47	214A8-02201	199

Part No.	Fig.No.	Part No.	Fig.No.	Part No.	Fig.No.	Part No.	Fig.No.
214A8-02201	207	214A8-10622	189	214A8-42661	193	216G2-40711	24
214A8-10512	174	214A8-10622	196	214A8-42661	194	216G2-40721	24
214A8-10512	174	214A8-10622	204	214A8-42661	202	216G2-40731	24
214A8-10512	181	214A8-10632	174	214A8-42661	208	216G2-42311	19
214A8-10512	181	214A8-10632	181	214A8-42661	209	216G2-42311	20
214A8-10512	181	214A8-10632	189	214A8-42721	209	216G2-43111	23
214A8-10512	189	214A8-10632	196	214A8-43081	195	216G2-43401	19
214A8-10512	189	214A8-10632	204	214A8-44151	180	216G2-43401	20
214A8-10512	196	214A8-10642	174	214A8-44151	188	216G2-43411	19
214A8-10512	196	214A8-10642	181	214A8-44151	195	216G2-43411	20
214A8-10512	204	214A8-10642	189	214A8-44151	203	216G2-43421	19
214A8-10512	204	214A8-10642	196	214A8-44151	210	216G2-43421	20
214A8-10512	204	214A8-10642	204	214A8-46001	209	216G2-43502	24
214A8-10522	174	214A8-10653	174	214A8-52051	74A	216G2-43502	27
214A8-10522	181	214A8-10653	181	214A8-52051	97	216G2-43502	28
214A8-10522	189	214A8-10653	189	214A8-52051	97A	216G2-43502	29
214A8-10522	196	214A8-10653	196	214A8-52221	97A	216G2-43502	30
214A8-10522	204	214A8-10653	204	214A9-20101	167	216G2-43531	24
214A8-10532	174	214A8-10663	174	214J8-42721	193	216G2-43531	27
214A8-10532	181	214A8-10663	181	214J8-42721	208	216G2-43531	28
214A8-10532	189	214A8-10663	189	214J8-46001	193	216G2-43531	29
214A8-10532	196	214A8-10663	196	214J8-46001	208	216G2-43531	30
214A8-10532	204	214A8-10663	204	214T0-83501	193	216G2-43542	24
214A8-10542	174	214A8-10673	174	214T0-83501	208	216G2-43542	27
214A8-10542	181	214A8-10673	181	214T0-83511	193	216G2-43542	28
214A8-10542	189	214A8-10673	189	214T0-83511	208	216G2-43542	29
214A8-10542	196	214A8-10673	196	214T0-83521	193	216G2-43542	30
214A8-10542	204	214A8-10673	204	214T0-83521	208	216G2-43551	24
214A8-10552	174	214A8-10683	174	214T0-83531	193	216G2-43551	27
214A8-10552	181	214A8-10683	181	214T0-83531	208	216G2-43551	28
214A8-10552	189	214A8-10683	189	214T0-83541	193	216G2-43551	29
214A8-10552	196	214A8-10683	196	214T0-83541	208	216G2-43551	30
214A8-10552	204	214A8-10683	204	215E4-32341	74	216G2-43562	24
214A8-10563	174	214A8-11001	174	215E4-32341	74A	216G2-43562	27
214A8-10563	181	214A8-11001	181	215E4-39801	74	216G2-43562	28
214A8-10563	189	214A8-11001	189	215E4-39801	74A	216G2-43562	29
214A8-10563	196	214A8-11001	196	215E4-52231	74A	216G2-43562	30
214A8-10563	204	214A8-11001	204	215E4-52231	97	216G2-43571	24
214A8-10582	174	214A8-12001	174	215E8-42171	194	216G2-43571	27
214A8-10582	181	214A8-12001	181	215E8-42171	202	216G2-43571	28
214A8-10582	189	214A8-12001	189	215E8-42171	202	216G2-43571	29
214A8-10582	196	214A8-12001	196	215E8-42181	194	216G2-43571	30
214A8-10582	204	214A8-12001	204	215E8-42181	202	216G2-43582	24
214A8-10592	174	214A8-12011	174	215E8-42181	202	216G2-43582	27
214A8-10592	181	214A8-12011	181	216G0-93101	203	216G2-43582	28
214A8-10592	189	214A8-12011	189	216G0-93101	210	216G2-43582	29
214A8-10592	196	214A8-12011	196	216G0-93151	203	216G2-43582	30
214A8-10592	204	214A8-12011	204	216G1-02451	2	216G2-43592	24
214A8-10602	174	214A8-12021	174	216G1-02461	2	216G2-43592	27
214A8-10602	181	214A8-12021	181	216G1-02471	2	216G2-43592	28
214A8-10602	189	214A8-12021	189	216G1-02481	2	216G2-43592	29
214A8-10602	196	214A8-12021	196	216G1-02491	2	216G2-43592	30
214A8-10602	204	214A8-12021	204	216G1-02501	2	216G2-43602	24
214A8-10612	174	214A8-12031	174	216G2-22051	10	216G2-43602	27
214A8-10612	181	214A8-12031	181	216G2-40602	24	216G2-43602	28
214A8-10612	189	214A8-12031	189	216G2-40602	27	216G2-43602	29
214A8-10612	196	214A8-12031	196	216G2-40602	28	216G2-43602	30
214A8-10612	204	214A8-12031	204	216G2-40602	29	216G2-43611	24
214A8-10622	174	214A8-42661	179	216G2-40602	30	216G2-43611	27
214A8-10622	181	214A8-42661	187	216G2-40701	24	216G2-43611	28

Part No.	Fig.No.	Part No.	Fig.No.	Part No.	Fig.No.	Part No.	Fig.No.
216G2-43611	29	216G8-33351	207	22N19-12181	164	22N40-70261	207
216G2-43611	30	216G8-33361	177	22N19-12281	164	22N40-70401	207
216G2-43622	24	216G8-33361	184	22N19-12601	164	22N40-70431	207
216G2-43622	27	216G8-33361	192	22N40-40201	192	22N40-70441	207
216G2-43622	28	216G8-33361	199	22N40-40211	192	22N40-70451	207
216G2-43622	29	216G8-33361	199	22N40-40221	192	22N40-70461	207
216G2-43622	30	216G8-33361	207	22N40-40231	192	22N40-70601	207
216G2-43631	24	216G8-33361	207	22N40-40241	192	22N40-70631	207
216G2-43631	27	216G8-33371	177	22N40-40251	192	22N40-70641	207
216G2-43631	28	216G8-33371	184	22N40-40261	192	22N40-70651	207
216G2-43631	29	216G8-33371	192	22N40-40271	192	22N40-70661	207
216G2-43631	30	216G8-33371	199	22N40-40401	192	22N40-72191	207
216G2-43651	19	216G8-33371	199	22N40-40411	192	22N40-72311	193
216G2-43651	20	216G8-33371	207	22N40-40421	192	22N40-72311	208
216G2-43711	19	216G8-33371	207	22N40-40431	192	22N40-74301	193
216G2-43711	20	216G8-33401	177	22N40-40441	192	22N40-74301	208
216G4-12101	70	216G8-33401	184	22N40-40451	192	22N40-74311	193
216G4-12111	70	216G8-33401	192	22N40-40461	192	22N40-74311	208
216G4-12681	71	216G8-33401	199	22N40-40471	192	22N40-74501	193
216G4-12711	71	216G8-33401	207	22N40-50201	193	22N40-74501	208
216G5-32201	115	216G8-52301	177	22N40-50201	208	22N40-80261	208
216G5-32331	115	216G8-52301	184	22N40-50211	193	22N40-80461	208
216G5-32341	115	216G8-52301	192	22N40-50221	193	22N40-80661	208
216G5-42011	110	216G8-52301	199	22N40-50221	208	22N40-81001	210
216G5-42011	110A	216G8-52301	207	22N40-50231	193	22N40-81091	210
216G6-42451	127	216G8-52352	162A	22N40-50231	208	22N40-82201	210
216G6-42481	127	216G8-53031	98	22N40-50241	193	22N40-82221	210
216G6-42541	127	216G9-12052	165	22N40-50251	193	22N40-82251	210
216G6-42541	127	216G9-12062	165	22N40-50261	193	22N40-82801	203
216G6-42921	129	216G9-12071	165	22N40-50261	208	22N40-82801	210
216G6-42931	129	216G9-12071	166	22N40-50271	193	22N40-90201	205
216G6-43231	77	216G9-12131	165	22N40-50401	193	22N41-00201	1
216G6-43241	119	216G9-12131	166	22N40-50401	208	22N42-42201	15
216G6-43561	126	216H3-92171	127	22N40-50411	193	22N43-90201	54
216G6-52161	130	216H3-92171	135	22N40-50421	193	22N43-90202	54
216G6-52161	131A	216H5-42141	127	22N40-50421	208	22N43-90211	54
216G6-52161	131B	216H7-82111	161	22N40-50431	193	22N43-90212	54
216G6-52291	127	217G2-32001	11	22N40-50431	208	22N43-90301	54
216G6-52291	130	217G2-32001	12	22N40-50441	193	22N43-90311	54
216G6-52291	131A	217G2-42021	23	22N40-50451	193	22N43-90321	54
216G6-52291	131B	217G2-42301	19	22N40-50461	193	22N43-90411	54
216G6-52291	135	217G2-42301	20	22N40-50461	208	22N43-90511	54
216G7-32021	143	217M1-02001	3	22N40-50471	193	22N43-90561	54
216G7-32021	144	217M1-02001	4	22N40-50601	193	22N43-92201	54
216G7-32021	145	217M2-12221	9	22N40-50601	208	22N43-92302	54
216G7-32021	146	22B51-02201	3	22N40-50611	193	22N43-92731	54
216G7-52051	121	22B54-30101	74A	22N40-50621	193	22N43-92901	54
216G7-52201	122	22B54-30121	74A	22N40-50621	208	22N43-92911	54
216G7-52201	122A	22B54-32171	74A	22N40-50631	193	22N43-93001	54
216G8-12101	174	22B54-32501	74A	22N40-50631	208	22N43-93011	54
216G8-12101	181	22B54-32511	74A	22N40-50641	193	22N43-93021	54
216G8-12101	189	22B54-32951	74A	22N40-50651	193	22N43-93031	54
216G8-12101	196	22B54-32961	74A	22N40-50661	193	22N43-93151	54
216G8-12101	204	22B54-50201	97A	22N40-50661	208	22N43-93201	54
216G8-12921	174	22B54-52001	97A	22N40-50671	193	22N45-30303	108
216G8-12921	181	22B54-52201	97A	22N40-62061	195	22N45-30304	108
216G8-12921	189	22B54-52301	98	22N40-70201	207	22N45-32101	112
216G8-12921	196	22N19-12151	164	22N40-70231	207	22N45-32131	112
216G8-12921	204	22N19-12161	164	22N40-70241	207	22N45-32151	110
216G8-33351	199	22N19-12171	164	22N40-70251	207	22N45-32151	110A

Part No.	Fig.No.	Part No.	Fig.No.	Part No.	Fig.No.	Part No.	Fig.No.
22N45-32161	110	22N50-40291	184	22N50-70461	199	22N53-00302	63
22N45-32161	110A	22N50-40292	184	22N50-70471	199	22N53-00602	63
22N45-32201	110	22N50-40301	184	22N50-70481	199	22N53-00612	63
22N45-32201	110A	22N50-40302	184	22N50-70491	199	22N53-02001	64
22N45-40202	108	22N50-40311	184	22N50-70501	199	22N53-02071	64
22N45-40302	108	22N50-40312	184	22N50-70601	199	22N53-02151	63
22N45-40303	108	22N50-40321	184	22N50-70611	199	22N53-02201	69
22N45-42101	108	22N50-40322	184	22N50-70621	199	22N53-02212	69
22N45-42701	112	22N50-40331	184	22N50-70631	199	22N53-02611	63
22N45-42801	112	22N50-40332	184	22N50-70641	199	22N53-03071	64
22N48-50011	162A	22N50-40341	184	22N50-70651	199	22N53-70101	69
22N48-50021	162A	22N50-40342	184	22N50-70661	199	22N53-70201	69
22N48-50031	162A	22N50-40351	184	22N50-70671	199	22N53-72001	69
22N48-50041	162A	22N50-40352	184	22N50-70681	199	22N54-10201	70
22N48-50061	162A	22N50-40361	184	22N50-70691	199	22N54-10201	71
22N48-50071	162A	22N50-40362	184	22N50-70701	199	22N54-10302	72
22N48-50081	162A	22N50-40371	184	22N50-73191	203	22N54-10312	72
22N48-50091	162A	22N50-40372	184	22N50-81601	202	22N54-10322	72
22N48-50101	162A	22N50-40381	184	22N50-81611	202	22N54-10342	72
22N48-50201	162A	22N50-40382	184	22N50-81621	202	22N54-10352	72
22N48-50301	163A	22N50-40401	184	22N50-81631	202	22N54-10361	72
22N48-50311	163A	22N50-40411	184	22N50-81641	202	22N54-10371	72
22N48-50311	163A	22N50-40421	184	22N50-81651	202	22N54-12011	70
22N48-50311	163A	22N50-40431	184	22N50-81661	202	22N54-12022	70
22N48-50311	163A	22N50-40441	184	22N50-81671	202	22N54-12201	133
22N48-52421	162A	22N50-40451	184	22N50-81681	202	22N54-12201	134
22N48-52801	162A	22N50-40461	184	22N50-81691	202	22N54-12311	133
22N48-52811	162A	22N50-40471	184	22N50-81701	202	22N54-12311	134
22N48-52821	162A	22N50-40481	184	22N50-90101	197	22N54-12321	133
22N48-52831	162A	22N50-40491	184	22N50-92101	203	22N54-12321	134
22N48-52841	162A	22N50-40501	184	22N50-92101	210	22N54-12411	71
22N48-52851	162A	22N50-40511	184	22N51-00161	1	22N54-13001	71
22N48-52861	162A	22N50-40521	184	22N51-00201	1	22N54-13021	71
22N48-52871	162A	22N50-40531	184	22N51-00211	1	22N54-13031	71
22N48-52901	162A	22N50-40541	184	22N52-22101	123	22N54-30102	74
22N48-52911	162A	22N50-40551	184	22N52-22201	121	22N54-30103	74
22N48-52921	162A	22N50-40561	184	22N52-22201	123	22N54-30122	74
22N48-52931	162A	22N50-40571	184	22N52-30101	11	22N54-32131	74
22N48-52941	162A	22N50-40581	184	22N52-32021	13	22N54-32151	74
22N48-53001	163A	22N50-50511	186	22N52-40301	14	22N54-32181	74
22N48-53101	163A	22N50-50521	186	22N52-42021	19	22N54-32181	74A
22N48-53101	163A	22N50-50531	186	22N52-42021	20	22N54-32201	74
22N50-40201	184	22N50-60201	182	22N52-42031	19	22N54-32211	74
22N50-40202	184	22N50-70201	199	22N52-42031	20	22N54-32211	74A
22N50-40211	184	22N50-70211	199	22N52-42101	19	22N54-32221	74
22N50-40212	184	22N50-70221	199	22N52-42101	20	22N54-32222	74
22N50-40221	184	22N50-70231	199	22N52-42111	23	22N54-32222	74A
22N50-40222	184	22N50-70241	199	22N52-42201	16	22N54-32231	74
22N50-40231	184	22N50-70251	199	22N52-42251	25	22N54-32232	74
22N50-40232	184	22N50-70261	199	22N52-42301	23	22N54-32241	74
22N50-40241	184	22N50-70271	199	22N52-42311	19	22N54-32241	74A
22N50-40242	184	22N50-70281	199	22N52-42311	20	22N54-32261	74
22N50-40251	184	22N50-70291	199	22N52-42321	19	22N54-32261	74A
22N50-40252	184	22N50-70301	199	22N52-42321	20	22N54-32311	75
22N50-40261	184	22N50-70401	199	22N52-42331	19	22N54-32321	75
22N50-40262	184	22N50-70411	199	22N52-42331	20	22N54-32351	74
22N50-40271	184	22N50-70421	199	22N52-42501	14	22N54-32361	74
22N50-40272	184	22N50-70431	199	22N52-42511	14	22N54-32402	74
22N50-40281	184	22N50-70441	199	22N52-43001	19	22N54-32402	74A
22N50-40282	184	22N50-70451	199	22N52-43001	20	22N54-32481	74

Part No.	Fig.No.	Part No.	Fig.No.	Part No.	Fig.No.	Part No.	Fig.No.
22N54-32501	74	22N55-42702	113	22N56-43531	127	22N57-32031	155
22N54-32511	74	22N55-42802	113	22N56-43541	127	22N57-32041	143
22N54-32941	74	22N55-50101	118	22N56-50201	130	22N57-32041	144
22N54-32971	74	22N55-50101	118	22N56-50201	131A	22N57-32041	145
22N54-33051	74	22N55-50101	119	22N56-50201	131B	22N57-32041	146
22N54-33051	74A	22N55-50201	118	22N56-50212	130	22N57-32131	155
22N54-50201	97	22N55-50201	119	22N56-50212	131A	22N57-32321	143
22N54-50221	97	22N56-32041	124	22N56-50212	131B	22N57-32331	144
22N54-52001	97	22N56-32041	124A	22N56-52201	130	22N57-32341	145
22N54-52101	97	22N56-32301	124A	22N56-52201	131A	22N57-32351	146
22N54-52141	97	22N56-32301	125A	22N56-52201	131B	22N57-33011	143
22N54-52151	97	22N56-40101	126	22N56-52222	130	22N57-33011	144
22N54-52201	97	22N56-40102	126	22N56-52222	131A	22N57-33011	145
22N54-52251	97	22N56-40202	127	22N56-52222	131B	22N57-33011	146
22N54-52251	97A	22N56-40203	127	22N56-52231	130	22N57-33011	153
22N54-59801	97	22N56-40252	135	22N56-52231	131A	22N57-33021	143
22N55-10161	99	22N56-40262	135	22N56-52231	131B	22N57-33021	144
22N55-10161	99A	22N56-40272	135	22N56-52241	130	22N57-33021	145
22N55-12271	101	22N56-40302	128	22N56-52241	131A	22N57-33021	146
22N55-12281	101	22N56-40361	127	22N56-52251	130	22N57-33031	143
22N55-12571	102	22N56-40371	128	22N56-52251	131A	22N57-33031	144
22N55-12701	103	22N56-40401	128	22N56-52302	132	22N57-33031	145
22N55-12701	103	22N56-40411	135	22N56-52311	132	22N57-33031	146
22N55-12701	103	22N56-40421	135	22N56-52321	132	22N57-33031	155
22N55-12711	103	22N56-40451	127	22N56-52351	130	22N57-33041	144
22N55-12721	103	22N56-40461	127	22N56-52351	130	22N57-33041	145
22N55-12901	104	22N56-40471	127	22N56-52361	130	22N57-33041	146
22N55-13181	99	22N56-42041	126	22N56-52402	130	22N57-33041	156
22N55-13181	99	22N56-42602	129	22N56-52402	131A	22N57-33041	156
22N55-13181	99A	22N56-42612	129	22N56-52402	131B	22N57-33041	156
22N55-13181	100	22N56-42701	133	22N57-30221	143	22N57-33071	153
22N55-13181	100	22N56-42701	134	22N57-30231	144	22N57-33081	156
22N55-13181	100A	22N56-42711	136	22N57-30241	145	22N57-33081	156
22N55-13181	105	22N56-42721	136	22N57-30251	146	22N57-33081	156
22N55-13181	105	22N56-42722	136	22N57-32011	143	22N57-33091	154
22N55-13181	106	22N56-42731	133	22N57-32011	143	22N57-33131	155
22N55-13181	106	22N56-42731	134	22N57-32011	144	22N57-33141	143
22N55-13181	106	22N56-42741	133	22N57-32011	144	22N57-33141	144
22N55-13181	106	22N56-42741	134	22N57-32011	145	22N57-33141	145
22N55-13181	126	22N56-42751	133	22N57-32011	145	22N57-33141	146
22N55-13191	99	22N56-42751	134	22N57-32011	146	22N57-33221	153
22N55-13191	100	22N56-42761	136	22N57-32011	146	22N57-33241	153
22N55-13191	105	22N56-42771	134	22N57-32011	153	22N57-33251	153
22N55-13191	106	22N56-42791	133	22N57-32021	143	22N57-33271	153
22N55-20211	107	22N56-42791	134	22N57-32021	143	22N57-33281	153
22N55-22031	107	22N56-42811	136	22N57-32021	144	22N57-33301	143
22N55-22121	107	22N56-42811	136	22N57-32021	144	22N57-33301	144
22N55-22131	107	22N56-42851	136	22N57-32021	145	22N57-33301	145
22N55-40202	109	22N56-42852	136	22N57-32021	145	22N57-33301	146
22N55-40302	109	22N56-42861	133	22N57-32021	146	22N57-33311	143
22N55-40303	109	22N56-42861	134	22N57-32021	146	22N57-33311	144
22N55-40402	109	22N56-42901	132	22N57-32021	154	22N57-33311	145
22N55-40403	109	22N56-42911	132	22N57-32031	143	22N57-33311	146
22N55-42101	109	22N56-43041	127	22N57-32031	143	22N57-33321	153
22N55-42141	110	22N56-43051	127	22N57-32031	144	22N57-33331	153
22N55-42141	111	22N56-43221	127	22N57-32031	144	22N57-33341	153
22N55-42171	112	22N56-43252	135	22N57-32031	145	22N57-33351	153
22N55-42171	113	22N56-43271	127	22N57-32031	145	22N57-33351	153
22N55-42191	109	22N56-43281	127	22N57-32031	146	22N57-33371	153
22N55-42601	109	22N56-43481	135	22N57-32031	146	22N57-33411	153

Part No.	Fig.No.	Part No.	Fig.No.	Part No.	Fig.No.	Part No.	Fig.No.
22N57-33421	154	22N57-33901	156	22N57-62391	158	22N58-30491	177
22N57-33451	154	22N57-33901	156	22N57-62401	160	22N58-30501	177
22N57-33461	154	22N57-33911	154	22N57-62451	160	22N58-30511	177
22N57-33541	155	22N57-33911	155	22N57-62531	160	22N58-30521	177
22N57-33541	156	22N57-33921	155	22N57-62801	158	22N58-30531	177
22N57-33541	156	22N57-33961	155	22N57-63011	147	22N58-30541	177
22N57-33541	156	22N57-33971	155	22N57-80201	161	22N58-30551	177
22N57-33551	155	22N57-33981	154	22N57-80201	161	22N58-30561	177
22N57-33561	155	22N57-33981	155	22N57-80301	161	22N58-30571	177
22N57-33561	156	22N57-40011	148	22N58-10501	174	22N58-30581	177
22N57-33561	156	22N57-40011	149	22N58-10501	181	22N58-31911	175
22N57-33561	156	22N57-40011	150	22N58-10501	189	22N58-32701	175
22N57-33571	155	22N57-40011	151	22N58-10501	196	22N58-32701	182
22N57-33571	156	22N57-40021	148	22N58-10501	204	22N58-32701	197
22N57-33571	156	22N57-40021	149	22N58-10511	174	22N58-32701	205
22N57-33571	156	22N57-40021	150	22N58-10511	181	22N58-32711	175
22N57-33581	155	22N57-40021	151	22N58-10511	189	22N58-32711	182
22N57-33581	156	22N57-40031	149	22N58-10511	196	22N58-32711	197
22N57-33581	156	22N57-40031	150	22N58-10511	204	22N58-32711	205
22N57-33581	156	22N57-40031	151	22N58-10521	174	22N58-40201	179
22N57-33591	155	22N57-40041	150	22N58-10521	181	22N58-40211	179
22N57-33591	156	22N57-40041	151	22N58-10521	189	22N58-40221	179
22N57-33591	156	22N57-40051	151	22N58-10521	196	22N58-40231	179
22N57-33591	156	22N57-42001	148	22N58-10521	204	22N58-40241	179
22N57-33621	155	22N57-42001	149	22N58-20201	175	22N58-40251	179
22N57-33621	156	22N57-42001	150	22N58-20701	175	22N58-40261	179
22N57-33621	156	22N57-42001	151	22N58-21811	175	22N58-40271	179
22N57-33621	156	22N57-42101	148	22N58-22001	198	22N58-40281	179
22N57-33631	155	22N57-42101	149	22N58-22111	198	22N58-40291	179
22N57-33631	156	22N57-42101	150	22N58-22121	198	22N58-40301	179
22N57-33631	156	22N57-42101	151	22N58-22411	175	22N58-40311	179
22N57-33631	156	22N57-42121	148	22N58-22951	175	22N58-40321	179
22N57-33641	156	22N57-42121	149	22N58-30201	177	22N58-40331	179
22N57-33641	156	22N57-42121	150	22N58-30211	177	22N58-40341	179
22N57-33641	156	22N57-42121	151	22N58-30221	177	22N58-40351	179
22N57-33651	155	22N57-42151	148	22N58-30231	177	22N58-40361	179
22N57-33651	156	22N57-42151	149	22N58-30241	177	22N58-40371	179
22N57-33651	156	22N57-42151	150	22N58-30251	177	22N58-40381	179
22N57-33651	156	22N57-42151	151	22N58-30261	177	22N58-43011	179
22N57-33661	156	22N57-42161	148	22N58-30271	177	22N58-43011	179
22N57-33661	156	22N57-42161	149	22N58-30281	177	22N58-43011	187
22N57-33661	156	22N57-42161	150	22N58-30291	177	22N58-43011	187
22N57-33671	155	22N57-42201	143	22N58-30301	177	22N58-43011	193
22N57-33671	156	22N57-42201	144	22N58-30311	177	22N58-43011	208
22N57-33671	156	22N57-42201	145	22N58-30321	177	22N58-43011	209
22N57-33671	156	22N57-42201	146	22N58-30331	177	22N58-45001	180
22N57-33691	155	22N57-42211	143	22N58-30341	177	22N58-45001	203
22N57-33701	155	22N57-42211	144	22N58-30351	177	22N58-45001	210
22N57-33751	153	22N57-42211	145	22N58-30361	177	22N58-50111	162
22N57-33751	155	22N57-42211	146	22N58-30371	177	22N58-50121	162
22N57-33751	156	22N57-52102	122	22N58-30381	177	22N58-50131	162
22N57-33751	156	22N57-52102	122A	22N58-30401	177	22N58-50141	162
22N57-33751	156	22N57-52302	121	22N58-30411	177	22N58-50211	162
22N57-33761	155	22N57-52303	121	22N58-30421	177	22N58-50221	162
22N57-33771	155	22N57-53001	121	22N58-30431	177	22N58-50231	162
22N57-33771	155	22N57-53101	122A	22N58-30441	177	22N58-50241	162
22N57-33891	155	22N57-62101	157	22N58-30451	177	22N58-50301	163
22N57-33901	154	22N57-62201	157	22N58-30461	177	22N58-50311	163
22N57-33901	155	22N57-62221	160	22N58-30471	177	22N58-50311	163
22N57-33901	156	22N57-62381	158	22N58-30481	177	22N58-50311	163

Part No.	Fig.No.	Part No.	Fig.No.	Part No.	Fig.No.	Part No.	Fig.No.
22N58-50311	163	22U52-12201	7	22252-32241	11	22679-45751	193
22N58-50401	162	22U52-30111	13	22252-32241	13	22679-45771	179
22N58-50501	162	22U52-42151	23	22252-32251	8	22679-45771	186
22N58-52101	162	22U52-42211	22	22252-32251	11	22679-45791	186
22N58-52111	162	22U55-22102	107	22256-42001	26	22679-45791	201
22N58-52121	162	22U57-62001	157	22256-42001	127	22679-45811	186
22N58-52201	162	22018-30121	175	224G2-32011	13	22679-45811	193
22N58-52201	162A	22018-30121	182	224G5-42061	110	22679-45811	208
22N58-52301	162	22018-30121	197	224G5-42061	110A	22679-45831	202
22N58-52301	162A	22018-30121	205	224G5-42061	111	22679-45851	179
22N58-52401	162A	22018-30261	175	224G5-42061	111A	22679-45851	193
22N58-52401	162A	22018-30261	182	224T8-52291	208	22679-45851	193
22N58-52501	177	22018-30261	197	224T8-53011	163A	22679-45851	208
22N58-52501	184	22018-30261	205	224T8-53021	163	22679-45871	193
22N58-52501	192	221A2-42031	37	225A7-62021	142	22679-45871	201
22N58-52501	199	221A2-42031	170	225N8-43021	179	22679-45891	179
22N58-52501	207	22192-22091	10	225N8-43021	179	22679-45891	186
22N58-52801	162	22193-03001	63	225R6-32001	125	22679-45891	186
22N58-52811	162	22198-42611	97A	225R6-32001	125A	22679-45891	202
22N58-52821	162	22199-12401	55	225R6-42031	54	22679-45911	179
22N58-52831	162	22199-12401	74	225R6-42031	133	22679-45911	201
22N58-52841	162	22199-12401	74	225R6-42031	134	22679-45931	208
22N58-52851	162	22199-12401	74A	225R9-12101	125	22679-45951	186
22N58-52861	162	22199-12401	74A	225R9-12101	125A	22679-45951	193
22N58-52871	162	22199-12401	75	22517-40051	148	22679-45951	202
22N58-52901	162	22199-12401	97	22517-40051	149	22679-45951	208
22N58-52911	162	22199-12401	97A	22517-40051	150	22679-45971	179
22N58-52921	162	22199-12401	108	22517-40051	151	22679-45991	186
22N58-52931	162	22199-12401	109	22517-40051	179	22679-45991	201
22N58-52941	162	22199-12401	162	22517-40051	202	22679-45991	209
22N58-53001	163	22199-12401	162	22548-34031	190	22679-46011	186
22N58-53101	163	22199-12401	162A	22548-34051	190	22679-46011	186
22N58-53101	163	22199-12401	162A	22548-34061	190	22679-46011	201
22N58-53111	163	22199-22001	167	22580-53321	187	22679-46031	179
22N58-53111	163A	22199-22251	167	22580-53321	194	22679-46031	202
22N59-12041	164	22199-22261	167	22655-42591	111	22679-46051	179
22N59-12051	164	222A2-10211	5	22655-42591	111A	22679-46071	209
22N59-12061	164	222A2-10211	6	22658-52301	97	22679-46091	202
22N59-12101	164	222A2-22061	123	22673-72111	69	22679-46111	179
22N59-12111	164	222A2-42031	133	22673-72131	69	22679-46111	186
22N59-12151	164	222A2-42031	134	22673-72141	69	22679-46111	201
22N59-12161	164	222A6-42381	37	22673-72161	69	22679-46111	209
22N59-12171	164	222A9-32011	104	22673-72252	69	22679-46151	179
22N59-12181	164	22208-40031	179	22673-72261	69	22679-46151	179
22N59-12261	165	22208-40031	186	22673-72321	69	22679-46151	202
22N59-12281	164	22208-40031	201	22673-72391	69	22679-46171	179
22N59-12351	165	22208-40031	202	22673-79801	69	22679-46171	186
22N59-12601	164	22214-30321	74	22679-12102	172	22679-46171	202
22N90-90152	203	22214-30321	74A	22679-43831	187	22679-46191	209
22N90-90161	203	22218-40191	179	22679-43831	194	22679-46211	201
22S57-82001	161	22218-40191	186	22679-43831	209	22679-46211	209
22U42-42211	21	22218-40191	193	22679-45611	186	22679-46231	186
22U51-00101	1	22218-40191	201	22679-45651	201	22679-46271	179
22U51-00201	1	22218-40191	202	22679-45671	186	22679-46271	202
22U51-00212	1	22218-40191	208	22679-45671	193	22679-46311	186
22U51-00301	2	22218-40191	209	22679-45711	179	22679-46331	179
22U51-02501	3	22218-42111	179	22679-45711	186	22679-46331	201
22U51-02601	3	22218-42111	186	22679-45731	193	22679-46371	186
22U52-12001	9	22218-42111	201	22679-45731	201	22679-46391	179
22U52-12011	9	22218-42111	202	22679-45731	208	22679-46391	202

Part No.	Fig.No.	Part No.	Fig.No.	Part No.	Fig.No.	Part No.	Fig.No.
22679-46411	201	229G0-60431	195	232A0-62001	188	234A0-50521	187
22679-46451	179	229G0-60441	195	232A8-42201	187	234A0-50531	187
22679-46491	202	229G0-60451	195	232A8-42201	187	234A0-50541	187
22679-46531	179	229G0-60461	195	232A8-42201	193	234A0-50551	187
22679-46531	186	229G0-60471	195	232A8-42201	194	234A0-50561	187
22679-46591	202	229G0-62401	195	232A8-42201	202	234A0-50571	187
22679-46651	186	229G0-62601	195	232A8-42201	202	234A0-50581	187
22679-46691	179	230C2-42201	22	232A8-42201	208	234A0-50591	187
22679-46811	179	230C2-42201	39	232A8-42601	209	234A0-50601	187
22717-40061	107	230C2-42201	50	232A8-42621	209	234A0-50611	187
22717-40081	179	230C2-42201	51	232A8-42631	209	234A0-50621	187
22717-40081	202	230C2-42201	51A	232L8-42601	193	234A0-50631	187
22854-40201	85	23019-20011	167	232L8-42601	208	234A0-50641	187
229F0-51201	187	231A0-82001	186	232L8-42621	193	234A0-50651	187
229F0-51211	187	231A0-82001	201	232L8-42621	208	234A0-50661	187
229F0-51221	187	231A8-10101	174	232L8-42631	193	234A0-50671	187
229F0-51231	187	231A8-10101	174	232L8-42631	208	234A0-50681	187
229F0-51241	187	231A8-10101	181	23232-42072	21	234A0-50701	187
229F0-51251	187	231A8-10101	181	23232-42072	22	234A0-50711	187
229F0-51261	187	231A8-10101	189	23235-40091	114	234A0-50721	187
229F0-51271	187	231A8-10101	189	23322-22011	10	234A0-50731	187
229F0-51281	187	231A8-10101	196	234A0-50001	187	234A0-50741	187
229F0-51291	187	231A8-10101	196	234A0-50011	187	234A0-50751	187
229F0-51301	187	231A8-10101	204	234A0-50021	187	234A0-50761	187
229F0-51311	187	231A8-10101	204	234A0-50031	187	234A0-50771	187
229F0-51311	194	231A8-10171	174	234A0-50041	187	234A0-50781	187
229F0-51321	187	231A8-10171	181	234A0-50051	187	234A0-50791	187
229F0-51331	187	231A8-10171	189	234A0-50061	187	234A0-50801	187
229F0-51341	187	231A8-10171	196	234A0-50071	187	234A0-50811	187
229F0-51351	187	231A8-10171	204	234A0-50081	187	234A0-50821	187
229F0-51361	187	231A8-12001	174	234A0-50091	187	234A0-50831	187
229F0-51371	187	231A8-12001	181	234A0-50101	187	234A0-50841	187
229F0-51381	187	231A8-12001	189	234A0-50111	187	234A0-50851	187
229F0-94101	203	231A8-12001	196	234A0-50121	187	234A0-50861	187
229F0-94101	210	231A8-12001	204	234A0-50131	187	234A0-50871	187
229F2-22071	123	231A8-12011	174	234A0-50141	187	234A0-50881	187
229F2-22151	121	231A8-12011	181	234A0-50151	187	234A0-51231	187
229F2-22151	123	231A8-12011	189	234A0-50161	187	234A0-52501	187
229F2-22171	123	231A8-12011	196	234A0-50171	187	234A0-52501	194
229F2-42161	49	231A8-12011	204	234A0-50181	187	234A0-52511	187
229F6-32001	124A	231A8-12021	174	234A0-50201	187	234A0-52511	194
229G0-50701	194	231A8-12021	181	234A0-50211	187	234A0-52611	187
229G0-50711	194	231A8-12021	189	234A0-50221	187	234A0-52611	194
229G0-50721	194	231A8-12021	196	234A0-50241	187	234A0-62051	188
229G0-50731	194	231A8-12021	204	234A0-50251	187	234A0-62051	195
229G0-50751	194	231A8-12031	174	234A0-50261	187	234A0-62101	195
229G0-50761	194	231A8-12031	181	234A0-50271	187	234A0-62111	188
229G0-50771	194	231A8-12031	189	234A0-50281	187	234A0-62111	195
229G0-50801	194	231A8-12031	196	234A0-50291	187	234A2-12201	5
229G0-50811	194	231A8-12031	204	234A0-50301	187	234A2-12201	6
229G0-50821	194	231F8-10501	174	234A0-50311	187	234A2-12211	5
229G0-50831	194	231F8-10501	181	234A0-50321	187	234A2-12211	6
229G0-50851	194	231F8-10501	189	234A0-50331	187	234A2-42301	36
229G0-50861	194	231F8-10501	196	234A0-50341	187	234A3-72001	69
229G0-50871	194	231F8-10501	204	234A0-50351	187	234A3-72021	69
229G0-52251	193	231F8-10571	174	234A0-50361	187	234A3-72031	69
229G0-52251	208	231F8-10571	181	234A0-50371	187	234A3-72101	69
229G0-60401	195	231F8-10571	189	234A0-50381	187	234A6-32001	124
229G0-60411	195	231F8-10571	196	234A0-50501	187	234A6-32001	124A
229G0-60421	195	231F8-10571	204	234A0-50511	187	234A6-32001	125

Part No.	Fig.No.	Part No.	Fig.No.	Part No.	Fig.No.	Part No.	Fig.No.
234A6-32001	125A	234A8-10601	204	234A8-42551	187	234B0-50541	194
234A6-43121	128	234A8-10611	174	234A8-42551	194	234B0-50551	194
234A8-02101	180	234A8-10611	181	234A8-42551	202	234B0-50561	194
234A8-02101	188	234A8-10611	189	234A8-42551	202	234B0-50571	194
234A8-02101	195	234A8-10611	196	234A8-42551	209	234B0-50601	194
234A8-02201	180	234A8-10611	204	234A8-42561	77	234B0-50611	194
234A8-10501	174	234A8-10621	174	234A8-42561	187	234B0-50621	194
234A8-10501	181	234A8-10621	181	234A8-42561	187	234B0-50631	194
234A8-10501	189	234A8-10621	189	234A8-42561	194	234B0-50641	194
234A8-10501	196	234A8-10621	196	234A8-42561	202	234B0-50651	194
234A8-10501	204	234A8-10621	204	234A8-42561	202	234B0-50661	194
234A8-10511	174	234A8-10631	174	234A8-42571	187	234B0-50671	194
234A8-10511	181	234A8-10631	181	234A8-42571	187	234B0-62101	195
234A8-10511	189	234A8-10631	189	234A8-42571	193	234B0-62211	195
234A8-10511	196	234A8-10631	196	234A8-42571	194	234H7-60351	73
234A8-10511	204	234A8-10631	204	234A8-42571	202	23451-02011	13
234A8-10521	174	234A8-10641	174	234A8-42571	202	23452-42181	23
234A8-10521	181	234A8-10641	181	234A8-42571	208	23453-02071	64
234A8-10521	189	234A8-10641	189	234A8-42602	180	23453-02091	64
234A8-10521	196	234A8-10641	196	234A8-42602	188	23453-02131	64
234A8-10521	204	234A8-10641	204	234A8-42602	195	23454-40501	78
234A8-10531	174	234A8-10652	174	234A8-42602	203	23454-40501	80
234A8-10531	181	234A8-10652	181	234A8-42602	210	23454-40501	82
234A8-10531	189	234A8-10652	189	234A8-42611	180	23454-40501	84
234A8-10531	196	234A8-10652	196	234A8-42611	188	23454-40601	80
234A8-10531	204	234A8-10652	204	234A8-42611	195	23457-42041	149
234A8-10541	174	234A8-10662	174	234A8-42611	203	23457-42041	150
234A8-10541	181	234A8-10662	181	234A8-42611	210	23458-32052	190
234A8-10541	189	234A8-10662	189	234A8-42622	180	23460-53171	97
234A8-10541	196	234A8-10662	196	234A8-42622	188	23500-82001	179
234A8-10541	204	234A8-10662	204	234A8-42622	195	23500-82001	186
234A8-10551	174	234A8-10672	174	234A8-42622	203	23500-82001	201
234A8-10551	181	234A8-10672	181	234A8-42622	210	23500-82001	202
234A8-10551	189	234A8-10672	189	234A8-43501	179	23500-82001	209
234A8-10551	196	234A8-10672	196	234A8-43501	186	23647-40041	148
234A8-10551	204	234A8-10672	204	234A8-43501	193	23648-50161	194
234A8-10562	174	234A8-10682	174	234A8-43501	201	23650-52841	187
234A8-10562	181	234A8-10682	181	234A8-43501	202	23650-52841	194
234A8-10562	189	234A8-10682	189	234A8-43501	208	23650-52851	187
234A8-10562	196	234A8-10682	196	234A8-43501	209	23650-52851	194
234A8-10562	204	234A8-10682	204	234B0-50301	194	23650-52861	187
234A8-10571	174	234A8-22202	176	234B0-50311	194	23650-52861	194
234A8-10571	181	234A8-22202	183	234B0-50321	194	23650-83521	209
234A8-10571	189	234A8-22202	191	234B0-50331	194	23650-83531	97A
234A8-10571	196	234A8-22202	206	234B0-50341	194	23650-83531	209
234A8-10571	204	234A8-40701	180	234B0-50351	194	23650-83551	209
234A8-10581	174	234A8-40701	188	234B0-50361	194	23650-83561	209
234A8-10581	181	234A8-40701	195	234B0-50371	194	23650-83561	209
234A8-10581	189	234A8-40701	203	234B0-50401	194	23652-12051	8
234A8-10581	196	234A8-40701	210	234B0-50411	194	23652-12051	11
234A8-10581	204	234A8-41001	180	234B0-50421	194	23652-12051	56
234A8-10591	174	234A8-41001	188	234B0-50431	194	23652-44001	21
234A8-10591	181	234A8-41001	195	234B0-50441	194	23652-44001	22
234A8-10591	189	234A8-41001	203	234B0-50451	194	23652-44001	43
234A8-10591	196	234A8-41001	210	234B0-50461	194	23653-02001	64
234A8-10591	204	234A8-41101	180	234B0-50471	194	23653-72051	69
234A8-10601	174	234A8-41101	188	234B0-50501	194	23653-72062	69
234A8-10601	181	234A8-42551	179	234B0-50511	194	23653-72072	69
234A8-10601	189	234A8-42551	179	234B0-50521	194	23653-72081	69
234A8-10601	196	234A8-42551	187	234B0-50531	194	23653-72101	69

Part No.	Fig.No.	Part No.	Fig.No.	Part No.	Fig.No.	Part No.	Fig.No.
23653-72131	69	239A2-12141	5	242F6-82051	139	24328-40135	180
23653-72142	69	239A2-40501	17	242F6-82051	139A	24328-40135	203
23653-72152	69	239A2-42221	24	242F6-82051	140	24328-40140	203
23653-72161	69	239A2-42221	24	242F6-82051	141	24328-40145	180
23653-72171	69	239A2-42301	19	242F6-82081	137	24328-40145	180
23653-72201	69	239A2-42301	20	242F6-82081	139	24328-40145	180
23654-32041	74	239A2-42311	19	242F6-82081	139A	24328-40150	180
23654-32041	74A	239A2-42311	20	242F6-82081	140	24328-40150	203
23654-32161	74	239A3-02001	64	242F6-82081	141	24328-40150	203
23654-32161	74A	239A4-12402	70	242F6-82091	137	24328-40155	203
23654-34051	76	239A4-12411	70	242F6-82091	139	24328-40160	180
23654-40501	90	239A4-12431	70	242F6-82091	139A	24328-40160	203
23654-40501	92	239A4-12441	70	242F6-82091	140	24328-40165	180
23654-40501	94	239A4-12541	133	242F6-82091	141	24328-40165	203
23654-40501	96	239A5-12501	168	242F6-82101	137	24328-40170	180
23654-40511	92	239A5-12501	168A	242F6-82101	138	24328-40170	180
23655-22101	127	239A5-12521	168	242F6-82101	139	24328-40175	180
23655-42421	108	239A5-12521	168A	242F6-82101	139A	24328-40175	203
23655-42421	108	239A5-40501	110	242F6-82101	140	24328-40180	180
23655-42421	109	239A5-40501	110A	242F6-82101	141	24328-40180	180
23655-42421	109	239A5-40501	115	242F6-82111	137	24328-40180	203
23656-42601	62	239A5-42301	114	242F6-82111	138	24328-40185	180
23657-12002	142	239A5-42471	112	242F6-82111	139	24328-40185	203
23657-42131	149	239A8-20101	176	242F6-82111	139A	24328-40190	180
23658-42531	179	239A8-20101	183	242F6-82111	140	24328-40190	203
23658-42531	202	239A8-20101	198	242F6-82111	141	24328-40195	180
23658-52101	162	239A8-20111	176	242F6-82121	137	24328-40195	180
23658-52101	162	239A8-20111	183	242F6-82121	138	24328-40195	180
23658-52401	162	239A8-20111	198	242F6-82121	139	24328-40200	203
23658-52401	162	239A8-20121	176	242F6-82121	139A	24328-40205	180
23658-52401	162A	239A8-20121	183	242F6-82121	140	24328-40205	203
23658-52401	162A	239A8-20121	198	242F6-82121	141	24328-40205	203
23659-12101	166	239A8-20131	176	242F6-82141	137	24328-40210	180
23659-42161	176	239A8-20131	183	242F6-82141	139	24328-40210	203
23659-42161	183	239A8-20131	198	242F6-82141	139A	24328-40215	180
23659-42161	191	239A8-20141	176	242F6-82141	140	24328-40220	180
23659-42161	198	239A8-20141	183	242F6-82141	141	24328-40220	203
23659-44602	195	239A8-20141	198	242F6-82271	137	24328-40225	180
23678-06002	177	239A9-12051	165	242F6-82271	139	24328-40225	203
23678-06002	184	239A9-12301	165	242F6-82271	139A	24328-40230	180
23678-06002	192	239A9-92001	104	242F6-82271	140	24328-40230	180
23678-06002	199	239A9-92001	104	242F6-82271	141	24328-40230	180
23678-06002	207	239B0-60101	190	242F6-82281	137	24328-40240	180
23679-45801	193	239B2-10102	6	242F6-82281	139	24328-40245	203
23679-45801	208	239B2-12141	5	242F6-82281	139A	24328-40250	180
23772-12071	5	239B2-12141	6	242F6-82281	140	24328-40250	180
23772-12071	6	239B2-42301	37	242F6-82281	141	24328-40250	203
23775-42101	111	23917-42191	187	242F6-82361	138	24328-40260	180
23775-42101	111A	23917-42191	194	242F6-82371	138	24328-40265	180
238A2-42151	23	23917-42191	209	24235-42091	114	24328-40265	203
238F9-12071	165	242F6-80101	137	24237-62331	73	24328-40270	203
238P3-72041	69	242F6-80201	138	243C6-40021	127	24328-40275	180
238P3-72051	69	242F6-82041	137	243C6-42821	135	24328-40280	203
23813-00071	76	242F6-82041	138	24320-52001	187	24328-40285	180
23813-00081	76	242F6-82041	139	24320-52001	194	24328-40285	203
23819-20011	167	242F6-82041	139A	24320-55001	193	24328-40295	180
23819-20021	167	242F6-82041	140	24320-55001	208	24328-40300	180
23870-52871	147	242F6-82041	141	24320-56871	97A	24328-40320	180
239A2-10102	5	242F6-82051	137	24328-40110	180	24328-40330	180
239A2-12021	8	242F6-82051	138	24328-40120	180	24328-40355	180

Part No.	Fig.No.	Part No.	Fig.No.	Part No.	Fig.No.	Part No.	Fig.No.
24329-45541	58	25599-32001	127	27410-53111	194	277P0-89811	209
24329-45541	60	25599-32021	127	27419-12061	166	277P0-92131	203
24329-45541	62	256C1-08011	2	27419-12062	165	277P8-22051	175
24329-46201	180	256C1-12111	107	27419-12071	166	277P8-22051	175
24329-46201	180	256C2-42231	23	27419-12072	165	277P8-22051	175
24329-46201	203	256C2-42271	170	27419-12101	164	277P8-22051	177
24329-46201	203	256C5-12631	37	27539-12021	164	277P8-22051	177
24329-46201	203	256C6-32011	1	27662-62711	127	277P8-22051	182
24329-46201	210	256C9-52372	1	27662-62721	36	277P8-22051	184
24329-46201	210	256C9-52372	74A	27662-63711	102	277P8-22051	184
24353-72001	64	256T2-42121	133	27682-62131	49	277P8-22051	190
24354-32311	76	256T2-42121	134	27682-62131	50	277P8-22051	192
24453-02061	64	25784-52342	97A	27682-62131	51	277P8-22051	192
24453-02102	64	25785-43091	110	27682-62131	51A	277P8-22051	197
24454-32232	74	25785-43091	110A	277H7-60601	147	277P8-22051	199
24454-32232	74A	25790-94021	203	277N0-82021	203	277P8-22051	199
24459-42291	193	25790-94021	210	277P0-60301	188	277P8-22051	199
24459-42291	208	26062-42881	32	277P0-60311	188	277P8-22051	205
24459-42951	180	26062-42881	32	277P0-60321	188	277P8-22051	207
24459-42951	188	26062-42881	32	277P0-60331	188	277P8-22051	207
24459-42951	195	26062-42881	32	277P0-60341	188	277P8-22051	207
24459-42951	203	26062-42881	32	277P0-60351	188	277P8-22061	175
24459-42951	210	26062-42881	32	277P0-60361	188	277P8-22061	175
246B2-43221	50	26062-42881	34	277P0-60371	188	277P8-22061	175
246B2-43221	51	26062-42881	46	277P0-60381	188	277P8-22061	177
246B2-43221	51A	26062-42881	47	277P0-60391	188	277P8-22061	182
24662-22032	10	26062-42881	48	277P0-60401	188	277P8-22061	184
24662-22131	10	26094-17021	72	277P0-60411	188	277P8-22061	190
247C2-43301	50	26519-12281	165	277P0-60421	188	277P8-22061	192
247C2-43301	51	26602-42041	74	277P0-60431	188	277P8-22061	197
247C2-43301	51A	26602-42041	74A	277P0-60441	188	277P8-22061	199
247C2-43501	49	26602-42101	203	277P0-60451	188	277P8-22061	199
247C2-43501	51	26602-42221	158	277P0-60461	188	277P8-22061	205
247C2-43501	51A	27042-42312	45	277P0-60471	188	277P8-22061	207
247C2-43601	50	27042-42322	161	277P0-60481	188	277P8-22061	207
247C2-43601	51	27042-63111	169	277P0-81101	209	277P8-22071	175
247C2-43601	51A	27042-64311	45	277P0-81131	209	277P8-22071	177
24868-42111	179	27042-64561	170	277P0-81141	209	277P8-22071	177
24868-42111	179	27045-40302	110	277P0-81151	209	277P8-22071	182
24868-42111	194	27045-40302	110A	277P0-81161	209	277P8-22071	184
24868-42111	202	27045-40302	111	277P0-81302	209	277P8-22071	184
24868-42111	202	27045-40302	111A	277P0-81332	209	277P8-22071	190
25369-47031	37	27045-40302	116	277P0-81342	209	277P8-22071	192
25592-42081	23	27049-12172	164	277P0-81352	209	277P8-22071	192
25592-42121	123	271A7-52301	121	277P0-81362	209	277P8-22071	197
25595-42411	116	271A7-60351	142	277P0-81502	209	277P8-22071	199
25595-42421	116	271A9-12191	173	277P0-81532	209	277P8-22071	199
25595-42452	115	271A9-12251	165	277P0-81542	209	277P8-22071	199
25595-42452	116	271F6-42531	74A	277P0-81552	209	277P8-22071	205
25595-42452	117	271G3-72001	69	277P0-81562	209	277P8-22071	207
25595-42482	116	272K8-52201	177	277P0-81702	209	277P8-22071	207
25595-42491	110	272K8-52201	184	277P0-81732	209	277P8-22071	207
25595-42491	110A	272K8-52201	199	277P0-81742	209	277P8-22081	175
25595-42491	111	272K8-52201	207	277P0-81752	209	277P8-22081	177
25595-42491	111A	273A6-42471	130	277P0-81762	209	277P8-22081	177
25595-42501	116	273A6-42471	131A	277P0-81902	209	277P8-22081	182
25595-42502	116	273A9-12242	164	277P0-81932	209	277P8-22081	184
25599-22001	167	27391-02101	175	277P0-81942	209	277P8-22081	184
25599-22051	167	27397-52101	58	277P0-81952	209	277P8-22081	190
25599-22061	167	27410-53111	187	277P0-81962	209	277P8-22081	192

Part No.	Fig.No.	Part No.	Fig.No.	Part No.	Fig.No.	Part No.	Fig.No.
277P8-22081	192	281E8-52201	162A	514A5-12011	105	52N51-24111	175
277P8-22081	197	282M8-32501	187	514A5-12011	106	52N51-30201	36
277P8-22081	199	283A7-62501	73	514A5-12021	46	52N51-32001	36
277P8-22081	199	29590-64501	5	514A5-12021	48	52N51-32101	36
277P8-22081	199	29590-64501	6	514A5-12021	101	52N51-42101	31
277P8-22081	205	3956323	41	514A5-12021	102	52N51-42101	32
277P8-22081	207	50A70-92251	4	514A5-32341	40	52N51-42111	31
277P8-22081	207	50A71-31001	36	514A5-42051	169	52N51-42111	31
277P8-22081	207	50A78-92001	103	514A5-42141	168	52N51-42111	32
277P8-32701	177	50A78-92201	47	514A7-42002	64	52N51-42111	32
277P8-32701	184	50A78-92201	48	516G0-60101	2	52N51-42121	31
277P8-32701	192	509K2-30101	18	516G0-62011	2	52N51-42121	32
277P8-32701	199	509K2-82251	166	516G1-32012	36	52N51-42151	28
277P8-32701	207	509K3-82681	166	516G1-42111	32	52N51-42151	29
277T0-62071	188	509K3-83451	166	516G1-42111	32	52N51-42151	30
27732-42221	102	509P9-90101	26	516G1-42111	40	52N51-42161	27
27732-42311	35	514A1-41001	33	516G1-42211	34	52N51-42161	29
27732-42311	37	514A1-41001	47	516G1-42211	40	52N51-42201	136
27732-42311	40	514A1-41001	48	516G2-72051	124	52N51-42202	136
27792-63381	36	514A1-41011	33	516G2-72701	166	52N51-42211	136
278M2-42061	118	514A1-41021	33	516G2-72711	166	52N51-42212	136
278M2-42061	118	514A1-41031	33	516G2-82051	166	52N51-42301	27
278M2-42061	119	514A1-42041	40	516G2-82061	166	52N51-42301	28
278M2-42061	119	514A1-42161	175	516G3-82801	166	52N51-42301	29
278M6-42031	132	514A2-42201	97	516G5-13051	99	52N51-42401	31
278M6-42031	132	514A2-72411	152	516G5-13051	99A	52N51-42401	31
278M6-42031	132	514A2-72411	152	516G5-13051	100	52N51-42401	32
278M6-42031	132	514A2-72411	152	516G5-13051	100A	52N51-42401	32
278R0-63151	193	514A2-82012	166	516G5-13151	99	52N51-42411	31
278R0-63151	208	514A3-04201	179	516G5-13151	100	52N51-42411	31
27912-62441	118	514A3-04211	179	516G5-13151	105	52N51-42411	32
27912-62441	119	514A3-72052	74	516G5-13151	106	52N51-42411	32
27970-53141	209	514A3-72052	74A	516G6-92001	44	52N51-42511	31
27978-42411	193	514A3-72062	74	516G6-92011	44	52N51-42511	31
27978-42411	208	514A3-72062	74A	516G6-92022	44	52N51-42511	32
27978-42421	193	514A3-72091	25	516G6-92031	44	52N51-43021	136
27978-42421	208	514A3-72101	76	516G6-92151	44	52N51-43022	136
27978-42601	193	514A3-72201	74	516G9-10101	35	52N51-43031	136
27978-42601	208	514A3-72201	74A	516G9-12011	35	52N51-43032	136
27979-43101	180	514A3-72211	74	516M5-12301	104	52N51-61001	175
27979-43101	188	514A3-72211	74A	52B53-70101	74A	52N51-61011	175
27979-43101	195	514A3-82002	166	52B53-70121	74A	52N51-61101	175
27979-43101	203	514A3-82301	190	52B53-70201	74A	52N51-61111	175
27979-43101	210	514A3-82301	197	52B53-72201	74A	52N51-61201	182
280C2-42301	18	514A3-82321	197	52B53-72211	74A	52N51-61211	182
280C2-42311	18	514A3-82331	197	52N43-72101	15	52N51-61301	197
280C2-42331	17	514A3-82341	197	52N50-80201	12	52N51-61311	197
280C2-42331	18	514A3-82351	197	52N50-80211	12	52N51-70101	11
280C2-42341	18	514A3-82361	197	52N50-80221	12	52N51-70201	11
280C2-42351	17	514A3-82371	197	52N50-80301	12	52N51-70301	11
280C2-42351	18	514A3-82381	197	52N50-82501	12	52N52-C3771	136
281E6-42521	54	514A3-82391	197	52N50-82511	12	52N52-C3772	136
281E6-42521	133	514A3-82601	78	52N50-90101	99	52N52-C3801	136
281E6-42521	134	514A3-82601	80	52N50-90101	99A	52N52-C3831	136
281E6-42571	133	514A3-82601	82	52N50-90201	135	52N52-C3871	136
281E6-42571	134	514A3-82601	84	52N50-90401	99	52N52-C3872	136
281E6-42571	168	514A5-12011	99	52N50-90401	99A	52N52-C3881	136
281E6-42571	168A	514A5-12011	99	52N51-21001	175	52N52-C3911	136
281E7-42101	152	514A5-12011	100	52N51-21101	176	52N52-C3921	136
281E7-62041	160	514A5-12011	100	52N51-24101	175	52N52-C3931	136

Part No.	Fig.No.	Part No.	Fig.No.	Part No.	Fig.No.	Part No.	Fig.No.
52N52-C3981	110A	52N53-91251	184	52N55-12101	101	52N55-42711	171
52N52-C3981	111A	52N53-91252	184	52N55-12111	101	52N55-42721	171
52N52-32001	16	52N53-91261	184	52N55-32291	168	52N55-42731	171
52N52-32402	16	52N53-91262	184	52N55-32291	168A	52N55-42741	171
52N52-32502	16	52N53-91271	184	52N55-40051	168	52N55-42751	171
52N52-72101	166	52N53-91272	184	52N55-40052	168A	52N56-12051	41
52N52-72201	166	52N53-91281	184	52N55-40081	136	52N56-20101	14
52N52-82401	166	52N53-91282	184	52N55-40082	136	52N56-22012	49
52N52-82501	166	52N53-91291	184	52N55-40101	168	52N56-22021	49
52N52-90201	100	52N53-91292	184	52N55-40102	168A	52N56-22021	50
52N52-90201	100A	52N53-91301	184	52N55-40201	171	52N56-22021	51
52N52-90211	100	52N53-91302	184	52N55-40211	128	52N56-22101	49
52N52-90211	100A	52N53-91311	184	52N55-40251	171	52N56-22201	139
52N52-90221	100	52N53-91312	184	52N55-40301	170	52N56-22201	140
52N52-90221	100A	52N53-91321	184	52N55-40311	170	52N56-22201	141
52N52-90231	100	52N53-91322	184	52N55-40401	168	52N56-22401	49
52N52-90231	100A	52N53-91331	184	52N55-40401	168A	52N56-70321	143
52N53-70102	74	52N53-91332	184	52N55-40411	136	52N56-70331	144
52N53-70103	74	52N53-91341	184	52N55-40412	136	52N56-70341	145
52N53-70122	74	52N53-91342	184	52N55-42071	168A	52N56-70351	146
52N53-70202	74	52N53-91351	184	52N55-42082	168	52N56-70421	143
52N53-70203	74	52N53-91352	184	52N55-42083	168A	52N56-70431	144
52N53-72101	16	52N53-91361	184	52N55-42101	168	52N56-70441	145
52N53-72201	74	52N53-91362	184	52N55-42101	168A	52N56-70451	146
52N53-72211	74	52N53-91371	184	52N55-42111	168	52N56-72001	39
52N53-72301	16	52N53-91372	184	52N55-42111	168A	52N56-92001	44
52N53-72402	16	52N53-91381	184	52N55-42121	168	52N56-92101	44
52N53-74001	175	52N53-91382	184	52N55-42121	168A	52N56-92201	44
52N53-74001	182	52N53-91701	192	52N55-42161	168	52N56-92211	44
52N53-74001	197	52N53-91761	192	52N55-42161	168	52N57-E2001	50
52N53-82002	16	52N53-91771	192	52N55-42161	168A	52N57-E2001	51
52N53-91001	177	52N53-91781	192	52N55-42161	168A	52N57-E2002	50
52N53-91011	177	52N53-91791	192	52N55-42171	169A	52N57-E2011	50
52N53-91021	177	52N53-91801	192	52N55-42181	169A	52N57-E2011	51
52N53-91031	177	52N53-91811	192	52N55-42191	169A	52N57-E2012	50
52N53-91041	177	52N53-91821	192	52N55-42201	169	52N57-E2012	51A
52N53-91051	177	52N53-91901	207	52N55-42201	169A	52N57-E2201	50
52N53-91061	177	52N53-91931	207	52N55-42211	169	52N57-E2201	51
52N53-91071	177	52N53-91941	207	52N55-42211	169A	52N57-E2201	51A
52N53-91081	177	52N53-91951	207	52N55-42221	169	52N57-E3021	51A
52N53-91091	177	52N53-91961	207	52N55-42221	169A	52N57-20201	37
52N53-91101	177	52N54-60221	143	52N55-42301	24	52N57-20211	37
52N53-91111	177	52N54-60231	144	52N55-42302	24	52N57-20221	37
52N53-91121	177	52N54-60241	145	52N55-42351	169	52N57-20301	37
52N53-91131	177	52N54-60251	146	52N55-42351	169A	52N57-20311	37
52N53-91141	177	52N55-00101	99	52N55-42421	170	52N57-22231	37
52N53-91151	177	52N55-00101	99A	52N55-42451	170	52N57-22241	37
52N53-91161	177	52N55-00111	99	52N55-42501	171	52N57-22341	37
52N53-91171	177	52N55-00111	99A	52N55-42511	171	52N57-31001	175
52N53-91181	177	52N55-00121	99	52N55-42521	171	52N57-42001	77
52N53-91201	184	52N55-00121	99A	52N55-42531	171	52N57-42011	77
52N53-91202	184	52N55-00131	99	52N55-42541	171	52N57-42021	77
52N53-91211	184	52N55-00131	99A	52N55-42551	171	52N57-42031	77
52N53-91212	184	52N55-00141	99	52N55-42561	171	52N57-42041	77
52N53-91221	184	52N55-00141	99A	52N55-42571	171	52N57-42051	77
52N53-91222	184	52N55-00501	104	52N55-42581	171	52N57-42101	64
52N53-91231	184	52N55-00511	103	52N55-42591	171	52N57-50101	42
52N53-91232	184	52N55-00521	103	52N55-42601	132	52N57-50301	42
52N53-91241	184	52N55-00551	104	52N55-42611	132	52N57-52001	46
52N53-91242	184	52N55-02451	25	52N55-42701	171	52N57-52001	47

Part No.	Fig.No.	Part No.	Fig.No.	Part No.	Fig.No.	Part No.	Fig.No.
52N57-52001	48	52N58-92401	21	529F1-42251	33	534A7-50601	47
52N57-52031	46	52N58-92401	21	529F1-42251	47	534A7-50601	48
52N57-52031	47	52N58-92401	22	529F1-42251	48	534A9-22001	102
52N57-52031	48	52N58-92401	22	529F3-70401	148	534A9-22011	102
52N57-52032	46	52N59-02001	35	529F3-70411	149	534A9-22211	24
52N57-52032	47	52N59-20411	127	529F3-70411	150	534F3-82001	90
52N57-52032	48	52N59-20412	127	529F3-70421	151	534F3-82001	92
52N57-52051	45	52N59-62001	172	529F3-82101	197	534F3-82001	94
52N57-52061	45	52N59-62001	173	529F3-82111	197	534F3-82001	96
52N57-52101	45	52N59-72301	124A	529F5-42041	168	53456-80502	80
52N57-52111	45	52N59-72301	125A	529F5-42041	168A	53456-80702	80
52N57-52151	45	52N59-92101	26	529F5-42061	168	53456-80902	78
52N57-52161	45	52N59-92501	26	529F5-42061	168A	53456-80902	80
52N57-72001	133	52U43-72001	21	529F7-22001	38	53456-82052	87
52N57-72001	134	52U50-92201	4	529F7-52241	46	53456-82062	87
52N58-10201	130	52U53-72001	22	529F7-52241	48	53457-40003	86
52N58-10201	131A	521A2-42001	23	53030-52471	38	53457-42151	86
52N58-10201	131B	521A2-42061	43	53130-12091	38	536G2-82181	166
52N58-10221	135	522A1-10201	2	532A1-70201	11	536G2-82281	166
52N58-10301	130	522A2-42001	23	532A1-70201	12	53651-12551	2
52N58-10301	131A	522A2-61561	69	533A2-40211	97A	53652-82541	166
52N58-10301	131B	522A6-80201	82	533A2-42001	97A	53652-82551	166
52N58-10301	135	522A6-80211	82	534A1-64402	176	53656-80201	88
52N58-10311	132	522A6-80221	82	534A1-64402	183	53656-80211	88
52N58-12201	130	522A6-80301	87	534A1-64402	198	53656-80401	89
52N58-12501	130	522A6-80311	87	534A1-64412	176	53656-80411	89
52N58-12501	131A	522A6-80321	87	534A1-64412	183	53656-80501	88
52N58-12501	131B	522A6-80401	89	534A1-64412	198	53656-80511	88
52N58-12501	135	522A6-80411	89	534A2-74001	176	53656-80601	88
52N58-12511	130	522A6-80421	89	534A2-74001	183	53656-80611	88
52N58-12511	131A	522A6-80431	89	534A2-74001	198	53656-80701	88
52N58-12511	131B	522A6-80441	89	534A2-74051	176	53656-80711	88
52N58-12511	135	522A6-80451	89	534A2-74051	183	53656-80901	88
52N58-22001	40	522A6-80501	94	534A2-74051	198	53656-80901	89
52N58-22101	40	522A6-80511	94	534A2-74101	176	53656-80911	88
52N58-82001	43	522A6-80521	94	534A2-74101	183	53656-80911	89
52N58-82101	43	522A7-22011	38	534A2-74101	198	53656-81301	94
52N58-82201	136	522B0-92021	4	534A2-74201	176	53656-81301	94
52N58-92001	34	522B0-92031	4	534A2-74201	183	53656-81301	94
52N58-92021	34	522B0-92041	4	534A2-74201	198	53656-81401	92
52N58-92021	47	522B0-92051	4	534A2-74301	176	53656-81501	90
52N58-92021	48	524T3-84031	197	534A2-74301	183	53656-81501	92
52N58-92041	34	524W3-83091	135	534A2-74301	198	53656-81601	92
52N58-92111	32	524W5-34011	169	534A3-82311	166	53656-82001	87
52N58-92111	32	52672-72231	179	534A3-82421	166	53656-82041	79
52N58-92111	32	52672-72231	186	534A3-82531	166	53656-82041	81
52N58-92111	32	52672-72231	193	534A4-22001	102	53656-82041	83
52N58-92111	32	52672-72231	201	534A4-22011	102	53656-82041	85
52N58-92111	32	52672-72231	202	534A5-00401	104	53656-82041	88
52N58-92111	34	52672-72231	208	534A5-00411	104	53656-82041	88
52N58-92112	32	52672-72231	209	534A5-32511	169	53656-82041	89
52N58-92112	32	52672-82073	166	534A5-43081	171	53656-82041	89
52N58-92112	32	52676-80202	86	534A5-43091	171	53656-82051	79
52N58-92112	32	52676-80302	86	534A6-80171	84	53656-82051	81
52N58-92112	32	52676-80402	86	534A6-80271	96	53656-82051	83
52N58-92112	32	52676-80601	82	534A6-85001	96	53656-82051	85
52N58-92112	34	52676-80601	82	534A6-85011	84	53656-82051	88
52N58-92201	33	52676-80601	82	534A7-02001	23	53656-82051	88
52N58-92211	33	52676-80802	87	534A7-42231	77	53656-82051	89
52N58-92251	33	529F1-42201	33	534A7-50601	46	53656-82051	89

Part No.	Fig.No.	Part No.	Fig.No.	Part No.	Fig.No.	Part No.	Fig.No.
53656-82061	79	538B6-60302	6	62A89-21811	178		
53656-82061	81	539A0-82201	12	62A89-21811	185		
53656-82061	83	539A2-82051	166	62A89-21811	200		
53656-82061	85	539A6-22021	23	62A89-21831	178		
53656-82061	88	539A6-60302	5	62A89-21831	178		
53656-82061	88	539A6-80201	82	62A89-21831	185		
53656-82061	89	539A6-80301	94	62A89-21831	185		
53656-82061	89	539A7-52041	45	62A89-21831	200		
53657-42053	86	539A7-52101	47	62A89-21831	200		
53657-42081	64	539A7-52101	48	62A89-21851	178		
53657-42091	64	539A8-22151	40	62A89-21851	178		
53658-43001	187	539A8-92251	33	62A89-21851	178		
53658-43001	194	539A9-02011	35	62A89-21851	185		
53658-43001	209	539A9-32001	104	62A89-21851	185		
53658-43011	187	542F3-80101	139A	62A89-21851	185		
53658-43011	194	542F3-82011	139	62A89-21851	200		
53658-43011	209	542F3-82011	139A	62A89-21851	200		
53658-43021	187	542F3-82011	140	62A89-21851	200		
53658-43021	194	542F3-82011	141	62050-12331	199		
53658-43021	209	55535-42161	168	62050-12331	207		
53658-43031	187	55535-42161	168A	62150-14321	203		
53658-43031	194	55593-02371	151	62150-14321	210		
53658-43031	209	55593-62551	188	62156-52341	178		
53658-43041	187	55593-62551	195	62156-52501	85		
53658-43041	194	55595-42251	171	62459-23371	178		
53658-43041	209	55597-22111	38	62459-23371	178		
53666-80201	81	55785-42051	168A	62459-23371	178		
53666-80401	83	55792-52601	45	62459-23371	185		
53666-80501	81	55792-52611	45	62459-23371	185		
53666-80601	79	55792-52621	45	62459-23371	185		
53666-80601	81	55792-52641	45	62459-23371	200		
53666-80701	81	558A9-92001	46	62459-23371	200		
53666-80901	93	558A9-92001	48	62459-23371	200		
53666-81301	95	56110-63521	38	63110-18921	164		
53666-81401	93	57045-52141	76	63110-18921	197		
53666-81501	91	57045-52151	76	63130-15301	199		
53666-81501	93	571A3-82361	166	63130-15301	207		
53666-81601	93	571A6-82081	94	641B0-12701	102		
53666-81801	79	577H2-82021	166	641B0-12751	102		
53666-81801	81	577H3-82151	166	97103-35431	97		
53666-81801	81	577H5-13051	104				
53666-81801	83	577P3-74001	175				
53666-81901	91	577P3-74001	177				
53666-81901	93	577P3-74001	177				
53666-81901	93	577P3-74001	182				
53666-81901	95	577P3-74001	184				
53666-82021	91	577P3-74001	184				
53666-82021	93	577P3-74001	197				
53666-82021	95	577P3-74001	199				
53666-82031	91	577P3-74001	199				
53666-82031	93	577P3-74001	199				
53666-82031	95	577P3-74011	175				
53666-82041	91	577P3-74011	182				
53666-82041	93	577P3-74011	184				
53666-82041	95	577P3-74011	197				
53671-92821	168	577P3-74011	199				
53671-92821	168A	577P3-74011	199				
53675-55051	180	58106-31011	23				
53675-55051	203	61170-10111	163				
53675-55051	210	61170-10111	163A				

No.PF−2U0C

2006年　3月　発行
2007年　1月　改訂
2007年　6月　改訂

TCM株式会社

本　社　大阪市西区京町堀1−15−10

発 行　TCMテクノ株式会社

ISSUED:MARCH,2006
REVISED:JANUARY,2007
REVISED:JUNE,2007

TCM CORPORATION

INTERNATIONAL MARKETING DIVISION : 1-15-5, Nishi−shimbashi, Minato−ku, Tokyo
105−0003, Japan
FAX : Japan +81−3−35918152, 3−35918153

無断で転載・複製を禁ず
All rights reserved.

SA−0706001(H)　Printed in Japan